# Горизонтальные водяные насосы
# PC, P2C, PJM, PS, PW, PXZ, PGW, PZ
## Технические характеристики


**По вопросам продаж и поддержки обращайтесь:**

Алматы (7273)495-231
Архангельск (8182)63-90-72
Астрахань (8512)99-46-04
Барнаул (3852)73-04-60
Белгород (4722)40-23-64
Брянск (4832)59-03-52
Владивосток (423)249-28-31
Волгоград (844)278-03-48
Вологда (8172)26-41-59
Воронеж (473)204-51-73
Екатеринбург (343)384-55-89
Иваново (4932)77-34-06
Ижевск (3412)26-03-58
Иркутск (395)279-98-46
Казань (843)206-01-48
Калининград (4012)72-03-81
Калуга (4842)92-23-67
Кемерово (3842)65-04-62
Киров (8332)68-02-04
Краснодар (861)203-40-90
Красноярск (391)204-63-61
Курск (4712)77-13-04
Липецк (4742)52-20-81
Магнитогорск (3519)55-03-13
Москва (495)268-04-70
Мурманск (8152)59-64-93
Набережные Челны (8552)20-53-41
Нижний Новгород (831)429-08-12
Новокузнецк (3843)20-46-81
Новосибирск (383)227-86-73
Омск (3812)21-46-40
Орел (4862)44-53-42
Оренбург (3532)37-68-04
Пенза (8412)22-31-16
Пермь (342)205-81-47
Ростов-на-Дону (863)308-18-15
Рязань (4912)46-61-64
Самара (846)206-03-16
Санкт-Петербург (812)309-46-40
Саратов (845)249-38-78
Севастополь (8692)22-31-93
Симферополь (3652)67-13-56
Смоленск (4812)29-41-54
Сочи (862)225-72-31
Ставрополь (8652)20-65-13
Сургут (3462)77-98-35
Тверь (4822)63-31-35
Томск (3822)98-41-53
Тула (4872)74-02-29
Тюмень (3452)66-21-18
Ульяновск (8422)24-23-59
Уфа (347)229-48-12
Хабаровск (4212)92-98-04
Челябинск (351)202-03-61
Череповец (8202)49-02-64
Ярославль (4852)69-52-93

Россия (495)268-04-70
Киргизия (996)312-96-26-47
Казахстан (7172)727-132

pyt@nt-rt.ru || https://purity.nt-rt.ru/

# Horizontal Water Pumps PC

## [PC]Thread Port Centrifugal Horizontal Pump from PURITY

### TECHNICAL DESCRIPTION

- New thread port centrifugal pump
- Original design by PURITY (patented)
- Both square motor & round motor available

-YE3 high efficient motor, with protection IP55 class F

-Pump case with anti-corrosive coating

- Impeller in brass or cast iron
- Shaft in stainless steel AISI 304 or galvanized iron

• Suction and discharge port in G20 thread

- Quality NSK bearing, wear resistance mechanical seal

# Product Description

## TECHNICAL DESCRIPTION

New thread port centrifugal pump
Original design by PURITY (patented)
Both square motor & round motor available
YE3 high efficient motor, with protection IP55 class F
Pump case with anti-corrosive coating
Impeller in brass or cast iron
Shaft in stainless steel AISI 304 or galvanized iron
Suction and discharge port in G20 thread
Quality NSK bearing, wear resistance mechanical seal

## APPLICATIONS

The high efficiency and continuous duty capabilities makes these pumps ideal for use in activities such as flood and spray irrigation, drawing water from lakes, rivers and wells, or for any number of different industrial applications where the characteristics of high flow rates and mid to low head are required. Suitable for use in civil and agricultural applications.

## USING LIMITS

Liquid temperature between -10°C and +120°C
Ambient temperature up to +50°C
Max. working pressure 16 bar
Continuous service S1

## PATENTS

Registered model PC
Registered Patent Design n° 201530476290.2

## TECHNICAL DATA

**TECHNICAL DATA / *DATOS TtCNICOS*** **50 Hz n=29001/min**

| MODEL *MODELO* | Power *Potencia* | | l/min | Q>DELIVERY / *CAUDAL* | | | | | | | | | | | | | | | | | | | | | DN |
|---|---|---|---|---|---|---|---|---|---|---|---|---|---|---|---|---|---|---|---|---|---|---|---|---|---|
| | | | | 0 | 100 | 150 | 200 | 250 | 300 | 350 | 400 | 500 | 600 | 700 | 800 | 900 | 1000 | 1100 | 1200 | 1400 | 1500 | 1800 | 2000 | 2300 | |
| | kw | hp | m*/h | 0 | 6 | 9 | 12 | 15 | 18 | 21 | 24 | 30 | 36 | 42 | 43 | 54 | 60 | 66 | 72 | 84 | 90 | 108 | 120 | 136 | mm |
| PC 5B | 0.75 | 1 | | 17.9 | 16.4 | 16.5 | 15 | 14 | 13.5 | 11.4 | 9.5 | 5 | | | | | | | | | | | | | 50x50 |
| PC 5BM | 1.1 | L5 | | 20.2 | 192 | 19 | 18 | 17 | 16 | 14 | 12 | 7.5 | | | | | | | | | | | | | 50x50 |
| PC 5AM | 1.5 | 2 | | 22.5 | 22 | 21.5 | 21 | 20 | 18.5 | 16.6 | 14.5 | 10 | | | | | | | | | | | | | 50x50 |
| PC *220C* | 2.2 | 3 | | 32 | 31 | 30.S | 30 | 29 | 28 | 26 | 24 | 21 | | | | | | | | | | | | | 50x50 |
| *PC 220B* | 3 | 4 | | 38 | 37 | 36.5 | 36 | 34.8 | 315 | 31.2 | 29 | 25 | | | | | | | | | | | | | 50x50 |
| PC 680C | 4 | 5.5 | | 52 | SI | S0.8 | 50.3 | 49 | 47.5 | 45 | 43 | 40 | | | | | | | | | | | | | 50x50 |
| PC 6SOB | 5.5 | 75 | | 61 | 60 | 59.5 | 59 | 58.5 | 57 | 5S | 52.5 | 50 | | | | | | | | | | | | | 50x50 |
| PC 6C | 1.1 | L5 | | 11.9 | | | 1L7 | ILS | 11.3 | 11 | 10.7 | 10.2 | 9.2 | 8 | 6.7 | 5 | 3 | | | | | | | | SOxSO |
| PC6B | 1.5 | *2* | | 14.7 | | | 14.5 | 14.3 | 14 | 13.8 | 13.5 | 1Z8 | 12 | 11 | 9.7 | 8.2 | 6.7 | 5 | | | | | | | 50x50 |
| PC6A | *2.2* | 3 | | 18.5 | | | 18.1 | 18 | 17.8 | 17.5 | *17.2* | 16.8 | 16 | 15 | 13.8 | 12.2 | 105 | 83 | 6 | | | | | | 80x80 |
| PC6H | 3 | 4 | | 21.5 | | | 21 | 20.9 | 20.7 | 20.4 | 20 | 19.5 | 188 | 17.8 | 16.5 | 15 | 135 | 11.2 | 9 | | | | | | 80x80 |
| PC 560C ★ | 4 | 5.5 | H(m) | 25 | | | | | | | | | 24.1 | 24 | 22.5 | 21.3 | 193 | 183 | 16.8 | 12名 | | | | | 80x80 |
| PC S60B ★ | 5.5 | 7.5 | | *32* | | | | | | | | | - | 30 | 28 | 266 | 243 | 22.7 | 20.5 | 143 | | | | | 80x80 |
| PC 560A * | 7.5 | 10 | | 40 | | | | | | | | | 38 | 37 | 36 | 34.4 | 32^ | 30.8 | 29 | 24 | 21 | | | | 80x80 |
| PC8C | *2.2* | 3 | | 18.5 | | | 18.1 | 18 | 17.8 | 17.5 | 17.2 | 16.8 | 16 | 15 | 13.8 | 12.2 | 105 | 8.3 | 6 | | | | | | 100x100 |
| PC8B | *3* | 4 | | 21.5 | | | 21 | 20.9 | 20.7 | 20.4 | 20 | 19.5 | 18.8 | 17.8 | 16.5 | 15 | 135 | 11.2 | 9 | | | | | | 100x100 |
| PC 62SC | 4 | 5.5 | | 19 | | | | | | | | | | | 17.3 | 16.8 | 155 | 15 | 14.5 | 13 | 11.8 | | | | 100x100 |
| PC 625B ★ | 5.5 | 7.5 | | 23 | | | | | | | | | | | 21.3 | 20.9 | 203 | 19.7 | 19 | 17.5 | 16.7 | 13.7 | | | 100x100 |
| PC 625A ★ | 7.5 | 10 | | 27 | | | | | | | | | | | 26 | 25.6 | 252 | 24.8 | 24.5 | 23 | 225 | 20 | 18 | | 100x100 |
| *PC* 660D ★ | 9.2 | 12.5 | | 33 | | | | | | | | | | | | 31.5 | 31 | 30.5 | 30 | 28 | 27.1 | 24 | 21.5 | | 100x100 |
| PC 660C ★ | 11 | IS | | 36 | | | | | | | | | | | | 34.5 | 34 | 33.5 | 33 | 31.5 | 30.8 | 28 | 25.5 | | 100x100 |
| PC 660B ★ | IS | 20 | | 42 | | | | | | | | | | | | 41 | 40.7 | 40.4 | 40 | 38.S | 37.8 | 35 | 33 | 29.5 | 100x100 |
| PC 660A ★ | 18.5 | 25 | | 49 | | | | | | | | | | | | 48 | 47.7 | 47.4 | 47 | 46 | 45 | 42 | 41 | 37 | 100x100 |

★=Cast iron impeller / *Impulsoren fundkidn*

# MATERIAL DESCRIPTION

## MATERIAL DESCRIPTION / *DESCRIPCIbN DE MATERIAL*

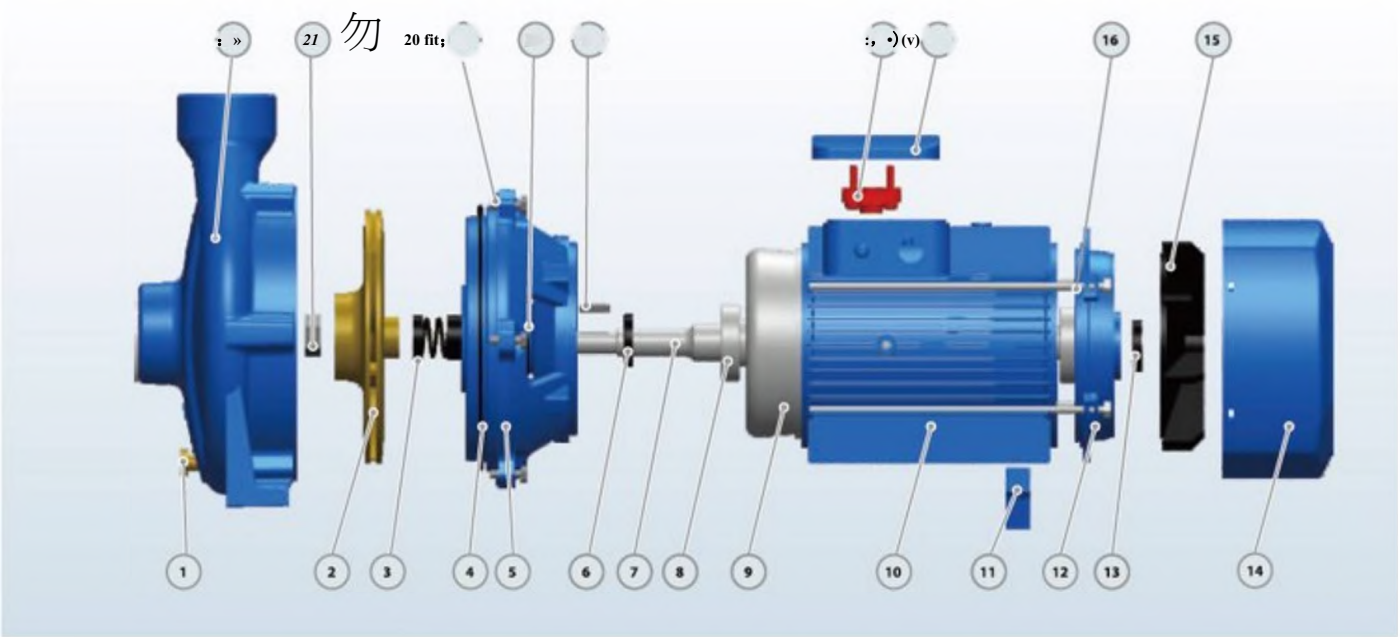


| No. | Description | Material | No. | Description | Material | No. | Description | Material |
|---|---|---|---|---|---|---|---|---|
| 1 | Release Valve | Brass | 9 | Wound Stator/Rotor | Silicon Steel/Copper | 17 | Terminal Box | Aluminum |
| 2 | Impeller | Brass | 10 | Motor Case | Aluminum | 18 | Terminal Board | Plastic |
| 3 | Mechanical Seal | SiC/Carbon/SS304 | 11 | Support Foot | Plastic | 19 | Impeller Key | Iron |
| 4 | O-ring | Rubber | 12 | Back Cover | Cast iron | 20 | Water Deflector | Rubber |
| 5 | Connection | Cast iron | 13 | Reinforced Seal | Rubber | 21 | Connection Bolt | Steel |
| 6 | Reinforced Seal | Rubber | 14 | Fan Cover | Aluminum | 22 | Impeller Nut | Galvanizated Steel |
| 7 | Shaft | SS304/45# Steel | 15 | Fan | Plastic | 23 | Pump Case | Cast iron |
| 8 | Bearing | Ball Bearing | 16 | Through Bolt | Steel | | | |

## DIMENSIONS AND WEIGHT

## DIMENSIONS AND WEIGHT / *DIMENSIONES Y PESOS*

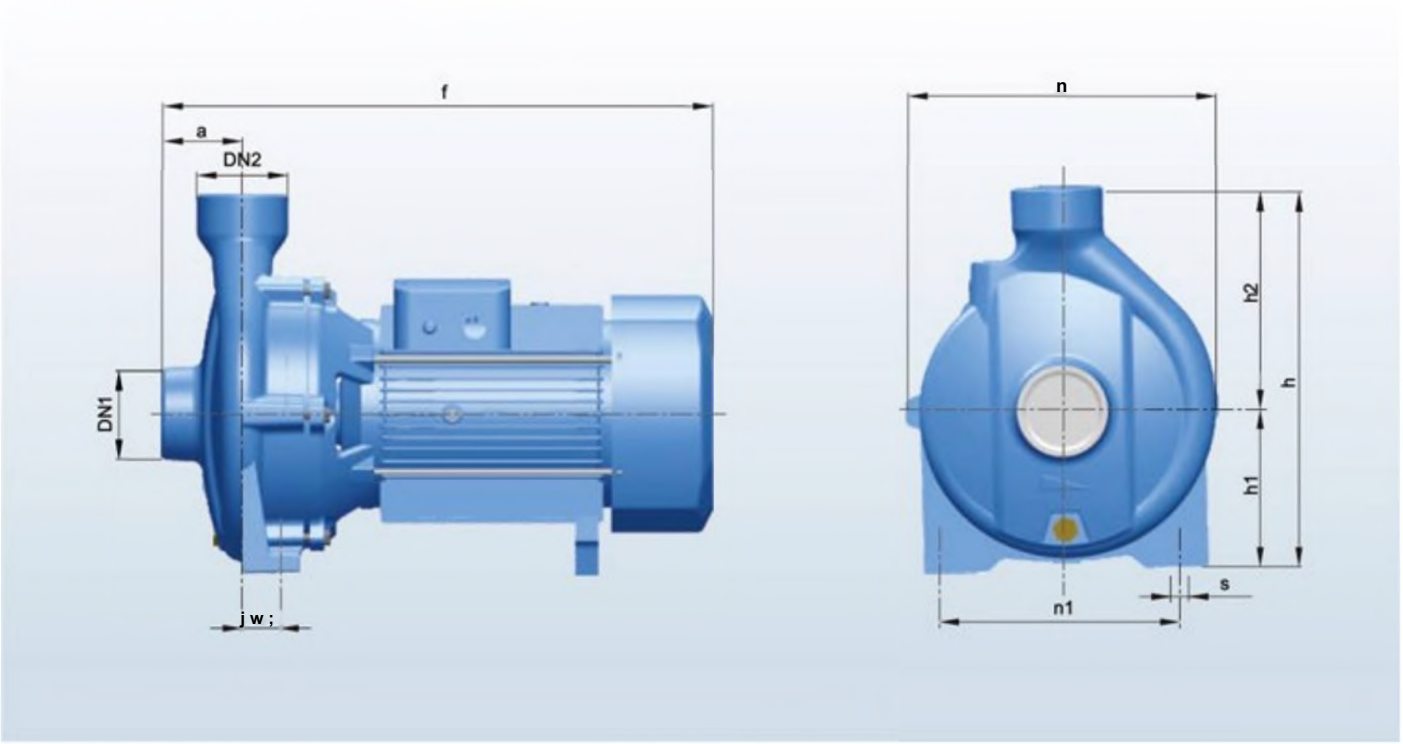


| MODEL/ *MODELO* | | DIMENSIONS / *DIMENSIONES* mm | | | | | | | | | | | kg | |
|---|---|---|---|---|---|---|---|---|---|---|---|---|---|---|
| Single-phase *MonofAsico* | Three-phase *TdfAsico* | DN1 | DN2 | a | f | h | hi | h2 | n | n1 | w | s | 1- | 3- |
| PC 5B | PC5B | SO | 50 | 51 | 398 | 265 | 105 | 160 | 206 | 160 | 1 | 11 | 18 | - |
| PC SBM | PC SBM | SO | 50 | 51 | 398 | 265 | IOS | 160 | 206 | 160 | 1 | 11 | 19.9 | 18.9 |
| PC 5AM | PC SAM | 50 | 50 | 51 | 398 | 265 | 105 | 160 | 206 | 160 | 1 | 11 | 21.9 | 20.9 |
| PC22OC | PC 220C | so | so | 75 | 472 | 322 | 132 | 190 | 245 | 165 | 40 | 14 | 29.5 | 28.5 |
| - | PC 220B | so | 50 | 75 | 472 | 322 | 132 | 190 | 245 | 16S | 40 | 14 | 幸 | 32.3 |
| - | PC 680C | 50 | SO | 75 | 535 | 335 | 140 | 195 | 273 | 190 | 40 | 14 | ■ | 42 |
| - | PC 680B | SO | 50 | 乃 | 535 | 335 | 140 | 195 | 273 | 190 | 40 | 14 | - | 47 |
| PC6C | PC 6C | 80 | 80 | 68 | 435 | 317 | 120 | 197 | 240 | 190 | 6 | 12 | 25 | 24 |
| PC6B | PC6B | 80 | 80 | 68 | 435 | 317 | 120 | 197 | 240 | 190 | 6 | 12 | 26.5 | 25.S |
| PC 6A | PC 6A | 80 | 80 | 68 | 43S | 317 | 120 | 197 | 240 | 190 | 6 | 12 | 27.7 | 26.7 |
| - | PC6H | 80 | 80 | 68 | 435 | 317 | 120 | 197 | 240 | 190 | 6 | 12 | - | 35 |
| - | PC S60C | 80 | 80 | 79 | 578 | 372 | 163 | 209 | 263 | 212 | 32 | 16 | - | 52 |
| - | PC 560B | 80 | 80 | 79 | 578 | 仍 | 163 | 209 | 263 | 212 | 32 | 16 | 禁 | 64 |
| - | PC 560A | 80 | 80 | 79 | 578 | 372 | 163 | 209 | 263 | 212 | 32 | 16 | - | 71 |
| PC 8C | PC 8C | 100 | 100 | 70 | 482 | 322 | 120 | 202 | 245 | 190 | 30 | 14 | 31 | 30 |
| - | PC8B | 100 | 100 | 70 | 482 | 322 | 120 | 202 | 245 | 190 | 30 | 14 | - | 35 |
| - | PC 62SC | 100 | 100 | 8S | 593 | 373 | 163 | 210 | 267 | 212 | 32 | 16 | - | 63 |
| - | PC625B | 100 | 100 | 85 | 593 | 373 | 163 | 210 | 267 | 212 | 32 | 16 | - | 68 |
| - | PC 62SA | 100 | 100 | 8S | 593 | 373 | 163 | 210 | 267 | 212 | 32 | 16 | - | 74 |
| - | PC 660D | 100 | 100 | 85 | 605 | 415 | 186 | 229 | 305 | 222 | 49 | 16 | - | 90 |
| - | PC 660C | 100 | 100 | 8S | 605 | 415 | 186 | 229 | 305 | 如 | 49 | 16 | - | 106 |
| - | PC 660B | 100 | 100 | 85 | 605 | 415 | 186 | 229 | 305 | 222 | 49 | 16 | - | 134 |
| - | PC 660A | 100 | 100 | 8S | 60S | 415 | 186 | 229 | 305 | 222 | 49 | 16 | ■ | 155 |

# Product Description

## TECHNICAL DESCRIPTION

New thread port centrifugal pump
Original design by PURITY (patented)
Both square motor & round motor available
YE3 high efficient motor, with protection IP55 class F
Pump case with anti-corrosive coating
Impeller in brass or cast iron
Shaft in stainless steel AISI 304 or galvanized iron
Suction and discharge port in G20 thread
Quality NSK bearing, wear resistance mechanical seal

## APPLICATIONS

The high efficiency and continuous duty capabilities makes these pumps

ideal for use in activities such as flood and spray irrigation,

drawing water from lakes, rivers and wells,

or for any number of different industrial applications where the

characteristics of high flow rates and mid to low head are required.

Suitable for use in civil and agricultural applications.

## USING LIMITS

Liquid temperature between -10°C and +120°C
Ambient temperature up to +50°C
Max. working pressure 16 bar
Continuous service S1

## PATENTS

Registered model PC
Registered Patent Design n° 201530476290.2

## TECHNICAL DATA

## MATERIAL DESCRIPTION

## MATERIAL DESCRIPTION / *DESCRIPCIbN DE MATERIAL*

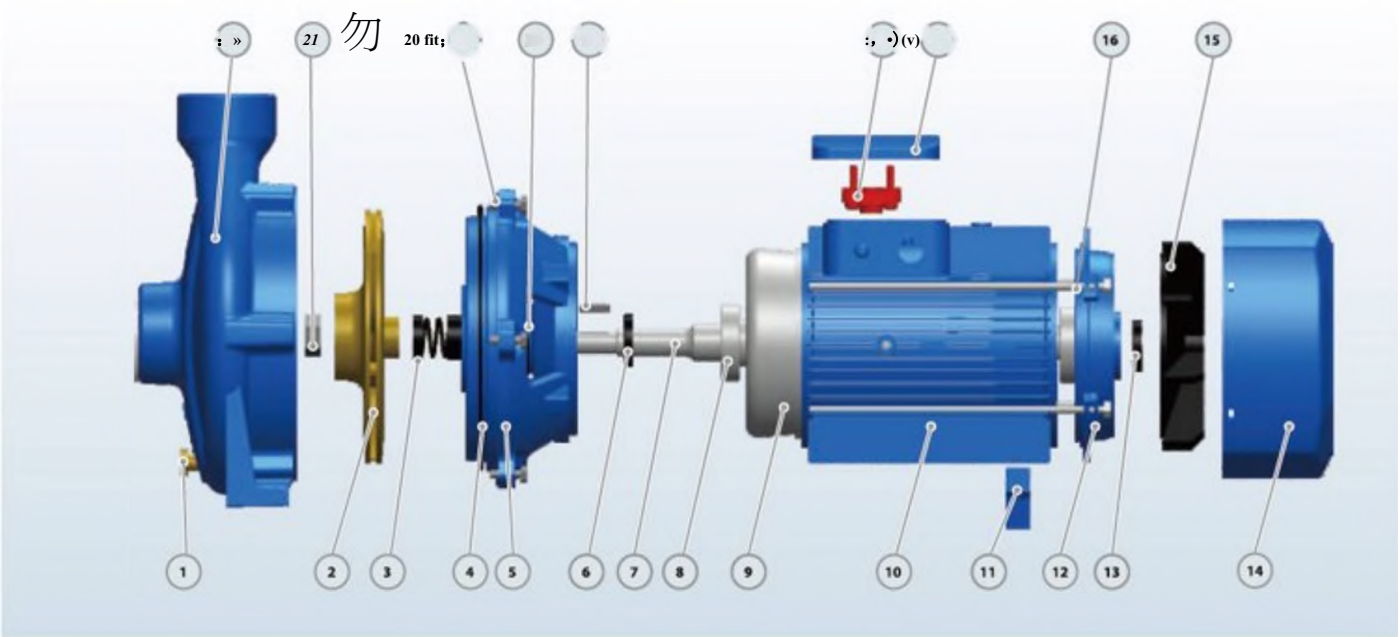


| No. | Description | Material | No. | Description | Material | No. | Description | Material |
|---|---|---|---|---|---|---|---|---|
| 1 | Release Valve | Brass | 9 | Wound Stator/Rotor | Silicon Steel/Copper | 17 | Terminal Box | Aluminum |
| 2 | Impeller | Brass | 10 | Motor Case | Aluminum | 18 | Terminal Board | Plastic |
| 3 | Mechanical Seal | SiC/Carbon/SS304 | 11 | Support Foot | Plastic | 19 | Impeller Key | Iron |
| 4 | O-ring | Rubber | 12 | Back Cover | Cast iron | 20 | Water Deflector | Rubber |
| 5 | Connection | Cast iron | 13 | Reinforced Seal | Rubber | 21 | Connection Bolt | Steel |
| 6 | Reinforced Seal | Rubber | 14 | Fan Cover | Aluminum | 22 | Impeller Nut | Galvanizated Steel |
| 7 | Shaft | SS304/45# Steel | 15 | Fan | Plastic | 23 | Pump Case | Cast iron |
| 8 | Bearing | Ball Bearing | 16 | Through Bolt | Steel | | | |

## DIMENSIONS AND WEIGHT

## DIMENSIONS AND WEIGHT / *DIMENSIONES Y PESOS*

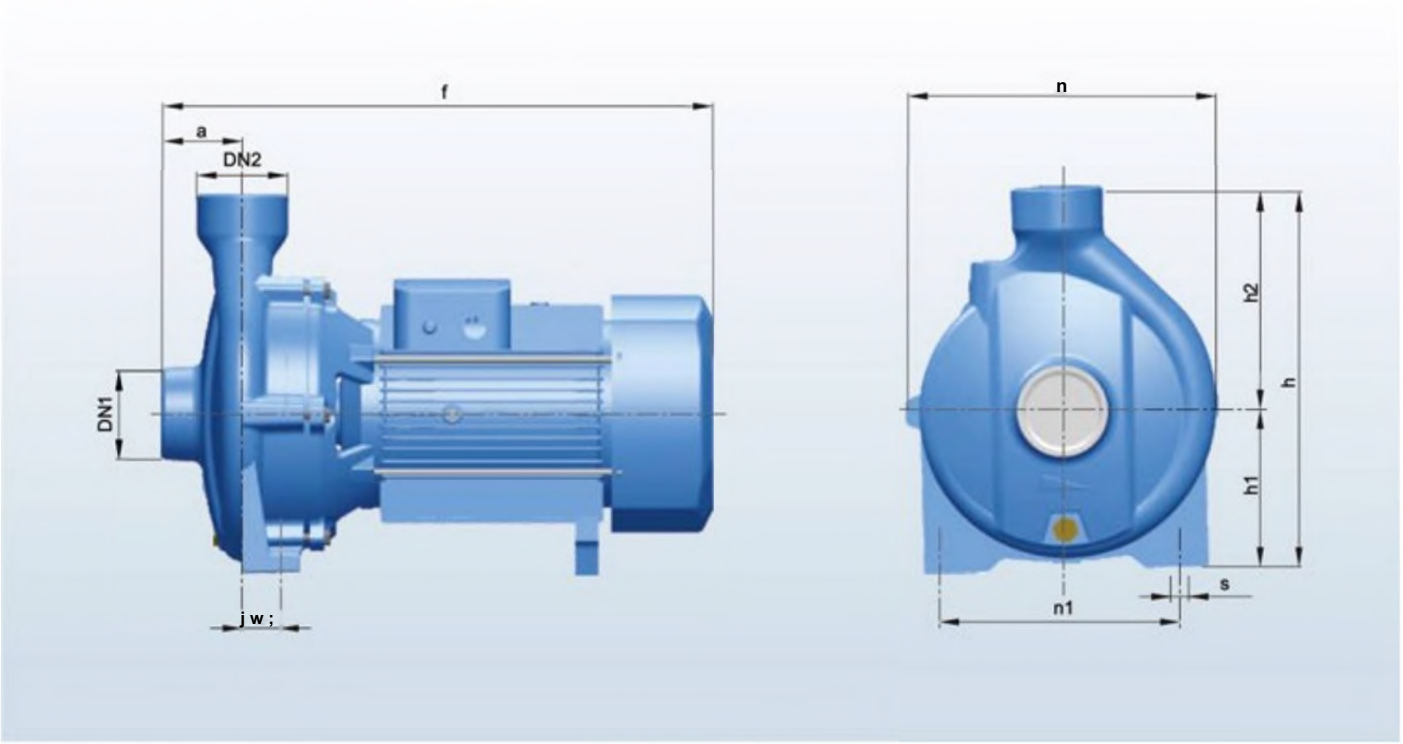


| MODEL/ *MODELO* | | DIMENSIONS / *DIMENSIONES* mm | | | | | | | | | | | kg | |
|---|---|---|---|---|---|---|---|---|---|---|---|---|---|---|
| Single-phase *MonofAsico* | Three-phase *TdfAsico* | DN1 | DN2 | a | f | h | hi | h2 | n | n1 | w | s | 1- | 3- |
| PC 5B | PC5B | SO | 50 | 51 | 398 | 265 | 105 | 160 | 206 | 160 | 1 | 11 | 18 | - |
| PC SBM | PC SBM | SO | 50 | 51 | 398 | 265 | IOS | 160 | 206 | 160 | 1 | 11 | 19.9 | 18.9 |
| PC 5AM | PC SAM | 50 | 50 | 51 | 398 | 265 | 105 | 160 | 206 | 160 | 1 | 11 | 21.9 | 20.9 |
| PC22OC | PC 220C | so | so | 75 | 472 | 322 | 132 | 190 | 245 | 165 | 40 | 14 | 29.5 | 28.5 |
| - | PC 220B | so | 50 | 75 | 472 | 322 | 132 | 190 | 245 | 16S | 40 | 14 | 幸 | 32.3 |
| - | PC 680C | 50 | SO | 75 | 535 | 335 | 140 | 195 | 273 | 190 | 40 | 14 | ■ | 42 |
| - | PC 680B | SO | 50 | 乃 | 535 | 335 | 140 | 195 | 273 | 190 | 40 | 14 | - | 47 |
| PC6C | PC 6C | 80 | 80 | 68 | 435 | 317 | 120 | 197 | 240 | 190 | 6 | 12 | 25 | 24 |
| PC6B | PC6B | 80 | 80 | 68 | 435 | 317 | 120 | 197 | 240 | 190 | 6 | 12 | 26.5 | 25.S |
| PC 6A | PC 6A | 80 | 80 | 68 | 43S | 317 | 120 | 197 | 240 | 190 | 6 | 12 | 27.7 | 26.7 |
| - | PC6H | 80 | 80 | 68 | 435 | 317 | 120 | 197 | 240 | 190 | 6 | 12 | - | 35 |
| - | PC S60C | 80 | 80 | 79 | 578 | 372 | 163 | 209 | 263 | 212 | 32 | 16 | - | 52 |
| - | PC 560B | 80 | 80 | 79 | 578 | 仍 | 163 | 209 | 263 | 212 | 32 | 16 | 禁 | 64 |
| - | PC 560A | 80 | 80 | 79 | 578 | 372 | 163 | 209 | 263 | 212 | 32 | 16 | - | 71 |
| PC 8C | PC 8C | 100 | 100 | 70 | 482 | 322 | 120 | 202 | 245 | 190 | 30 | 14 | 31 | 30 |
| - | PC8B | 100 | 100 | 70 | 482 | 322 | 120 | 202 | 245 | 190 | 30 | 14 | - | 35 |
| - | PC 62SC | 100 | 100 | 8S | 593 | 373 | 163 | 210 | 267 | 212 | 32 | 16 | - | 63 |
| - | PC625B | 100 | 100 | 85 | 593 | 373 | 163 | 210 | 267 | 212 | 32 | 16 | - | 68 |
| - | PC 62SA | 100 | 100 | 8S | 593 | 373 | 163 | 210 | 267 | 212 | 32 | 16 | - | 74 |
| - | PC 660D | 100 | 100 | 85 | 605 | 415 | 186 | 229 | 305 | 222 | 49 | 16 | - | 90 |
| - | PC 660C | 100 | 100 | 8S | 605 | 415 | 186 | 229 | 305 | 如 | 49 | 16 | - | 106 |
| - | PC 660B | 100 | 100 | 85 | 605 | 415 | 186 | 229 | 305 | 222 | 49 | 16 | - | 134 |
| - | PC 660A | 100 | 100 | 8S | 60S | 415 | 186 | 229 | 305 | 222 | 49 | 16 | ■ | 155 |

# Horizontal Water Pumps P2C

## [P2C]Double Impeller Centrifugal Pumps P2C Series Close-Coupled Pump

TECHNICAL DESCRIPTION

-New pump design for fire fighting

■ Original design by PURITY (patented)

■Both square motor & round motor available

-YE3 high efficient motor, with protection IP55 class F

■Pump case with anti-corrosive coating

■Impeller in stainless steel AISI 304 or brass

■Shaft in stainless steel AISI 304

■Galvanized counter flange with bolts, nuts and gaskets

■ Quality NSK bearing, wear resistance mechanical seal

-Models for capacities from 80-5000 US GPM

# Double impeller Centrifugal pump

**Technical Data**

**Lift range:4-16BAR**

**Flow range:27m$^3$/h**

# ADVANTAGES

Eight Characteristics

Energy-saving Certificate

Large Flow Capacity

YE3 Motor IP55 ClassF All Copper Wire

Stainless Steel 304 Impeller & Shaft

Anti-corrosive Coating

NSK Bearing

Costormized Sizes & Pumps

Good Quality & Service 2-Years Guarantee

# PRODUCT INFORMATION

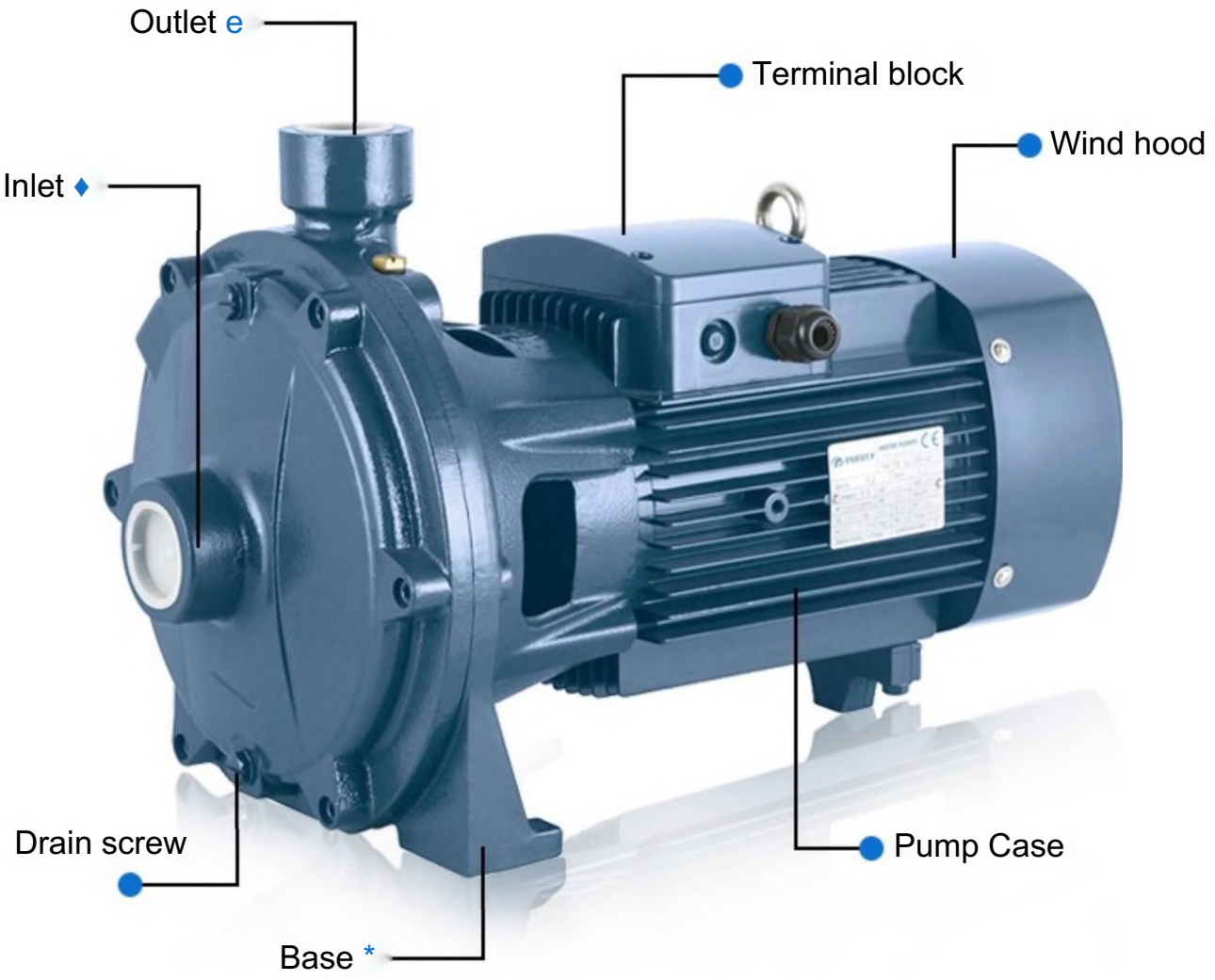


**TECHNICAL DESCRIPTION**

New EN733 standard centrifugal pump
Original design by PURITY (patented)
Both square motor & round motor available
YE3 high efficient motor, with protection IP55 class F
Pump case with anti-corrosive coating
Impeller in stainless steel AISI 304 or cast iron
Shaft in stainless steel AISI 304 or galvanized iron
Galvanized counter flange with bolts, nuts and gaskets
Quality NSK bearing, wear resistance mechanical seal

**APPLICATIONS**

Suitable for use with clean water and liquids that are not chemically

aggressive towards the materials from which the pump is made.
The EN733 centrifugal pumps are recommended for use in water supply, cleaning sets, pressure boosting, firefighting sets, irrigation, industrial applications, water circulation in climatisation sets, agricultural.

## USING LIMITS

Liquid temperature between -10°C and +120°C
Ambient temperature up to +50°C
Max. working pressure 16 bar
Continuous service S1

**TECHNICAL DATA / *DATOS TtCNICOS*** — **50 Hz n=2900 1 /min**

| MODEL *MODELO* | Power *Potencia* | | l/min | ^DELIVERY *1 CAUDAL* | | | | | | | | | | | | | | | | | | | DN |
|---|---|---|---|---|---|---|---|---|---|---|---|---|---|---|---|---|---|---|---|---|---|---|---|
| | | | | 0 | 40 | 50 | 60 | 70 | 80 | 90 | 100 | 110 | 120 | 140 | 160 | 180 | 200 | 250 | 300 | 350 | 400 | 450 | |
| | kw | hp | m³/h | 0 | 2.4 | 3 | 3.6 | 4.2 | 4.8 | 5.4 | 6 | 6.6 | 7.2 | 8.4 | 9.6 | 10.8 | 12 | 15 | 18 | 21 | 24 | 27 | mm |
| 25140/11 | 1.1 | 1.5 | | 54 | 47.5 | 44.5 | 41 | 37 | 33 | 28 | 22 | | | | | | | | | | | | 32x25 |
| 25-140/15 | 1.5 | 2 | | 67 | 60 | 57 | 54 | 50 | 45 | 40 | 32 | | | | | | | | | | | | 32x25 |
| 25-160/11 | 11 | 1.5 | | 47 | 44 | 42 | 40 | 38 | 35 | 33 | 30 | 27 | 24 | | | | | | | | | | 32x25 |
| 25-160/15 | 1.5 | 2 | | 58 | 54 | 53 | 51 | 49 | 47 | 45 | 43 | 40 | 37 | 30 | | | | | | | | | 32x25 |
| 25-160/22 | 2.2 | 3 | | 68 | 64.5 | 63 | 62 | 60 | 58 | S6 | 54 | 51 | 48 | 41 | 32 | | | | | | | | 32x25 |
| 32-200/30 | 3 | 4 | | 70 | | | | | 63 | 62 | 60.5 | 59 | 57 | 55 | 52 | 49.5 | 46.S | 36 | | | | | 40x32 |
| 32-200/40 | 4 | S.5 | | 8S | | | | | 77 | 76 | 75 | 74 | 72 | 69 | 66 | 62 | 58 | 49 | | | | | 40x32 |
| 32-210/SS | S.5 | 7.S | | 94 | | | | | 91 | 90 | 89 | 87 | 85 | 83 | 79 | 75 | 70 | 56 | | | | | 50x32 |
| 32-210/75 | 7.5 | 10 | | 112 | | | | | 110 | 109 | 108 | 107 | 105 | 102 | 99 | 94 | 89 | 74 | | | | | 50x32 |
| 40-210/55 | 5.5 | 7.5 | | 94 | | | | | 91 | % | 89 | 87 | 85 | 83 | 79 | 75 | 70 | 56 | | | | | 50x40 |
| 40-210/75 | 7.5 | 10 | | 112 | | | | | 110 | 109 | 108 | 107 | 105 | 102 | 99 | 94 | 89 | 74 | | | | | 50x40 |
| 50-180/40 | 4 | 5.5 | | 62 | | | | | 59 | 58 | 57 | 56 | 55 | 55 | SO | 48 | 44 | 36 | 31 | 23 | | | 50x50 |
| 50-180/55 | 5.5 | 7.5 | n(m) | 72 | | | | | 69 | 68 | 67 | 66 | 65 | 6S | 60 | S8 | 54 | 46 | 41 | 33 | | | 50x50 |
| 50-180/75 | 7.5 | 10 | | 84 | | | | | 81 | 80 | 79 | 78 | 76 | 75 | 72 | 72 | 66 | 58 | S3 | 45 | | | 50x50 |
| 40-200/92 | 9.2 | 12.5 | | 97 | | | | | | | | | | 91.S | 91 | 90 | 88 | 8S | 80 | 74 | 68 | 61 | 50x40 |
| 40-200/110 | 11 | IS | | 105 | | | | | | | | | | 100 | 99 | 98 | 97 | 93 | 88 | 83 | 76 | 69 | 50x40 |
| 50-200/92 | 9.2 | 12.5 | | 97 | | | | | | | | | | 91.5 | 91 | 90 | 88 | 85 | 80 | 74 | 63 | 61 | SOxSO |
| 50-200/110 | 11 | 15 | | 105 | | | | | | | | | | 100 | 99 | 98 | 97 | 93 | 88 | 83 | 76 | 69 | 50x50 |
| 40-2S0/130 | 13 | 17.5 | | 120 | | | | | | | | | | 114 | 113 | 112 | 110 | 107 | 103 | 98 | 91 | 82 | 50x40 |
| 40-250/150 | 15 | 20 | | 130 | | | | | | | | | | 124 | 123 | 122 | 120 | 117 | 113 | 108 | 102 | 92 | 50x40 |
| 40-250/185 | 18.5 | 25 | | 145 | | | | | | | | | | 139 | B8 | 137 | 136 | 131 | 126 | 121 | 114 | 107 | 50x40 |
| 40-250/220 | 22 | 30 | | 160 | | | | | | | | | | 155 | 153 | 1S2 | 151 | 146 | 141 | 135 | 130 | 122 | 50x40 |
| 50-250/130 | 13 | 17.5 | | 120 | | | | | | | | | | 114 | 113 | 112 | 110 | 107 | 103 | 98 | 91 | 82 | 50x50 |
| S0-250/1S0 | 15 | 20 | | 130 | | | | | | | | | | 124 | 123 | 122 | 120 | 117 | 113 | 108 | 102 | 92 | 50x50 |
| 5O-2SO/185 | 18.5 | 25 | | 145 | | | | | | | | | | 139 | 138 | 137 | 136 | 131 | 126 | 121 | 114 | 107 | SOxSO |
| 50-250/220 | 22 | 30 | | 160 | | | | | | | | | | 155 | 153 | 152 | 151 | 146 | 141 | 135 | 130 | 122 | SOxSO |

**We reserve the technique modrfication nght** *Nos rtitrvamos* **d** *dtrecho de la modificaci6n tunica*

## PERFORMANCE CURVE / *CURVAS DE FUNCIONAMIENTO*

50 Hz n=29001/min

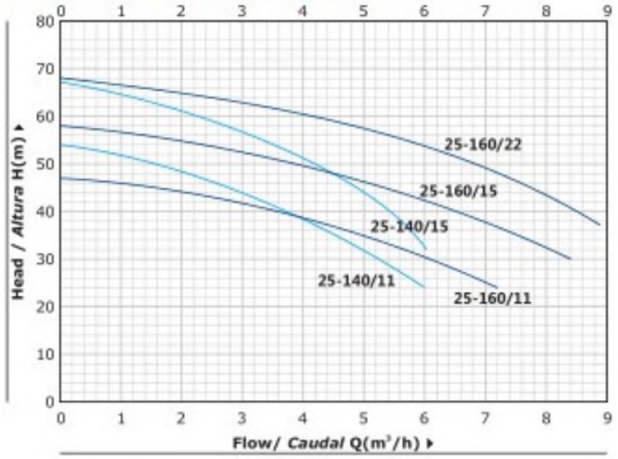


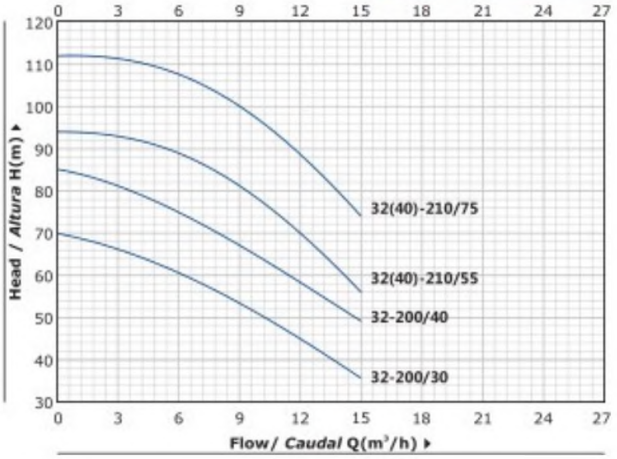


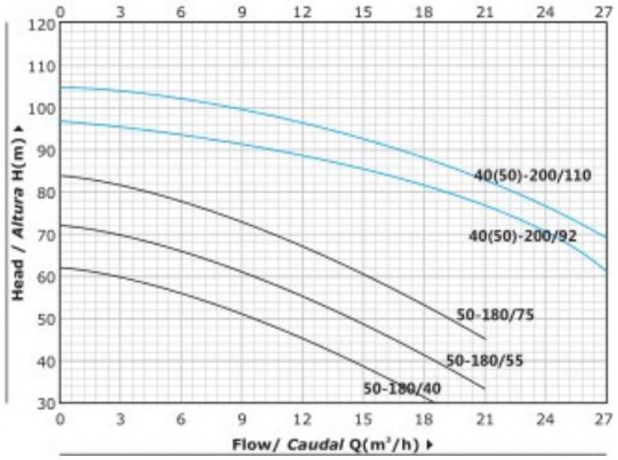


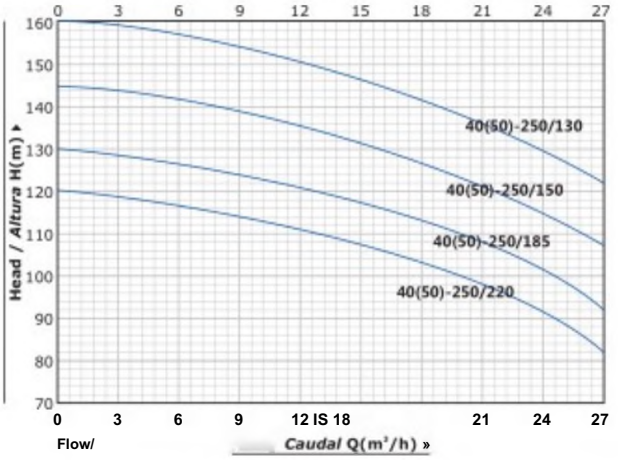

## MATERIAL DESCRIPTION / *DESCRIPCION DE MATERIAL*

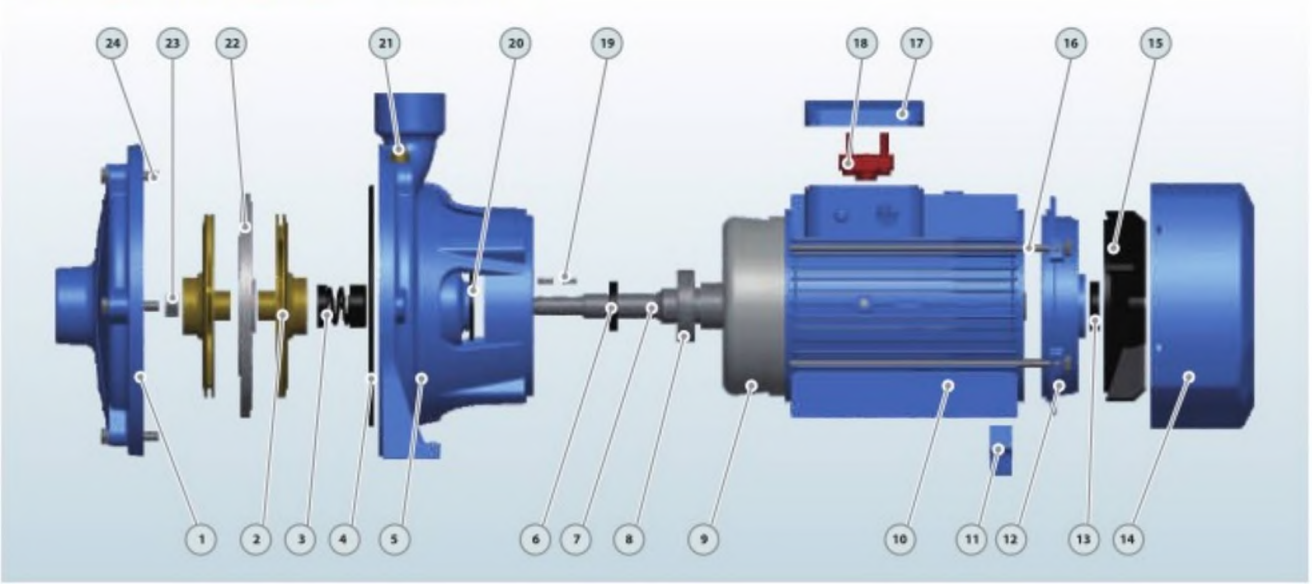


| No. | Description<br>*De cripcidn* | Material<br>*Material* |
|---|---|---|
| 1 | Pump Case<br>*Cuetpo de Bomba* | Cast iron<br>*Fundicibn* |
| 2 | Impeler<br>*tmpuisor* | Brass<br>*Bmnce* |
| 3 | Mecnartcai Seal<br>*Cierre Mec^nlco* | S»OCarborVSS304<br>*S>C'Gr9fito-lnox304* |
| 4 | Oring<br>*Junta Tdrica* | *Rubber*<br>*Caucho* |
| 5 | Connection<br>*Conexion* | Cast von<br>*FunOctAn* |
| 6 | Reinforced Seal<br>SedUo *Reforzado* | Rubber<br>Caucho |
| 7 | Shan<br>*Eje* | SS304/45# Steel<br>Inox 304/45# *Hierm* |
| 8 | Bearing<br>*Rodameoto* | Bal Beanng<br>*Bota Rodamt&nto* |

| No. | Description<br>*Descripcibn* | Material<br>*Material* |
|---|---|---|
| 9 | Wound StatonRotor<br>*Estator / Rotor* | Silicon StBel'Copper<br>*Acero al SHicia'CobrB* |
| 10 | Motor Case<br>*Cu&rpo de Motor* | Aiuminun<br>*A/umtnio* |
| 11 | Support Foot<br>*Soporte Pm* | Plastic<br>*Ptistico* |
| 12 | Back Cover<br>*Taps Trssera* | Cast iron<br>*Fundicibn* |
| 13 | Remforced Seal<br>*Seto Reforzado* | Rubber<br>*Caucho* |
| 14 | Fan Cover<br>*Tap9 V^ntfydor* | Aluminum<br>XUumhb |
| 15 | Fan<br>*V&nliacior* | Plastic<br>*PtAstico* |
| 16 | Through Bolt<br>*Pemo* | Steel<br>*Aceto* |

| No. | Description<br>*D^^cripcidn* | Material<br>*M9t9ri9l* |
|---|---|---|
| 17 | Terminai Box<br>C^a *de Bomes* | Aluminum<br>*Akjmino* |
| 18 | *Tetrnnai Boa/d*<br>TaNero *de Bomes* | Plastic<br>*PtAstlco* |
| 19 | Impeler Key<br>C/iavefa *tmputsor* | Iron<br>*Hwro* |
| 20 | Water Deflector<br>*Defiector* | Rubber<br>*Caucho* |
| 21 | Retease Va^e<br>*Tapdn Cebado* | Brass<br>fl/onoe |
| 22 | Diffuser<br>*DHusor* | Cas< iron<br>*FumfKt^n* |
| 23 | Impeller Nut<br>*Tuetca de Impuisor* | GatvanizalBd SteeJ<br>*Aceto Gal\<anizado* |
| 24 | Connection Bo*<br>*Pemo* | Stee4<br>*Acero* |

## DIMENSIONS AND WEIGHT / *DIMENSIONES Y PESOS*

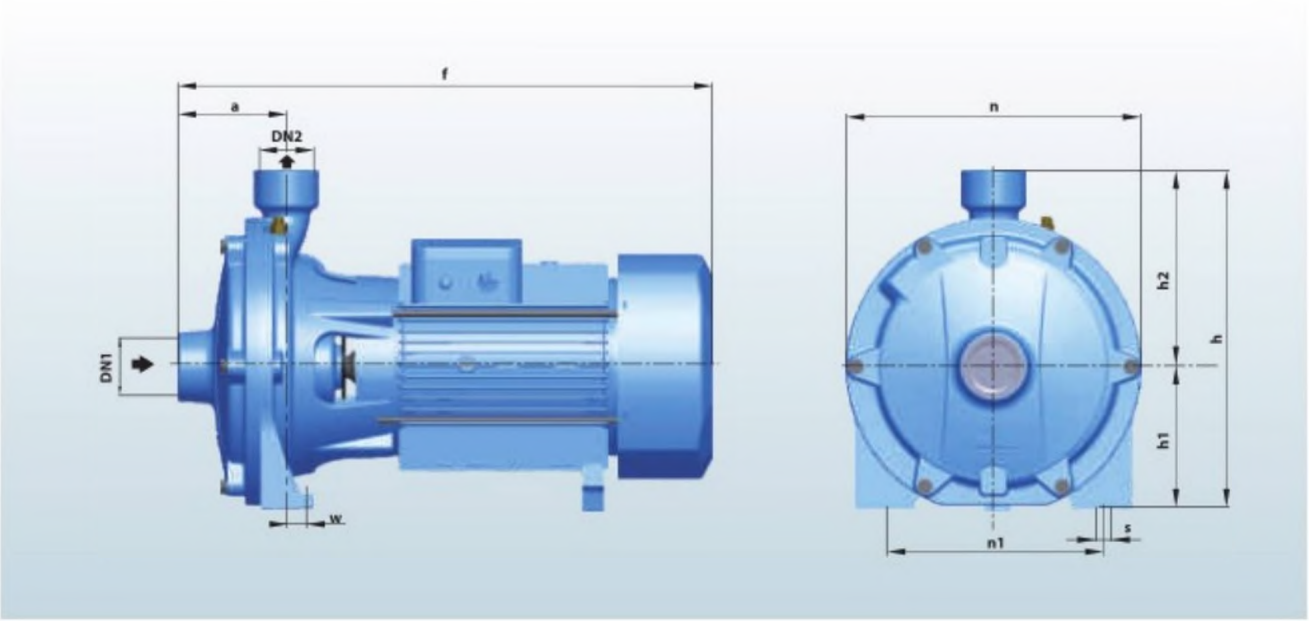


| MODEL / *MODELO* | | DIMENSIONS *1 DIMENSIONES* mm | | | | | | | | | | | kg | |
|---|---|---|---|---|---|---|---|---|---|---|---|---|---|---|
| Single-phase *Monofisico* | Three-phase *TrifAsico* | DN1 | DM2 | a | f | h | hl | h2 | n | n1 | w | 8 | ⊢ | 3- |
| 25-140/11 | 25-140/11 | 32 | 25 | 84 | 420 | 232 | 95 | 137 | 200 | 150 | 19 | 10 | 19.8 | 18.8 |
| 25-140/15 | 25* 140/15 | 32 | 25 | 84 | 420 | *232* | 95 | 137 | 200 | 150 | 19 | 10 | 24 | 23 |
| 2S160/11 | 25-160/11 | 32 | 25 | 84 | 420 | 270 | 110 | 160 | 225 | 172 | 19 | 11 | 19.8 | 18.8 |
| 2S-16O/15 | 25-160/1S | 32 | 25 | 84 | 420 | 270 | 110 | 160 | 225 | 172 | 19 | 11 | 24.2 | *23.2* |
| 2S-16O/22 | 25-160/22 | 32 | 25 | 84 | 420 | 270 | 110 | 160 | 225 | 172 | 19 | 11 | 25.5 | 24.5 |
| 32-200/30 | 32200/30 | 40 | 32 | 103 | S03 | 317 | 132 | 185 | 280 | 205 | 16 | 14 | 39 | 38 |
| - | 32-200/40 | 40 | 32 | 103 | 503 | 317 | 132 | 18S | 280 | 205 | 16 | 14 | - | 43 |
| - | 32*210/55 | 50 | 32 | 108 | 565 | 352 | 15S | 197 | 300 | 246 | 16 | 14 | - | 54 |
| - | 32-210/75 | *V)* | 32 | 108 | 565 | 352 | 155 | 197 | 300 | 246 | 16 | 14 | - | 61 |
| - | 5O-18Q/4O-55-75 | *V)* | 50 | 108 | 565 | 352 | 155 | 197 | 300 | 246 | 16 | 14 | - | 54 |
| - | 40-210/SS-7S | SO | 40 | 108 | S6S | 352 | 155 | 197 | 300 | 246 | 16 | 14 | - | 61 |
| - | 40-200/92 | 50 | 40 | 119 | 615 | 355 | 150 | 205 | 304 | 215 | 11 | 14 | - | 89 |
| - | 40-200/110 | 50 | 40 | 119 | 615 | 355 | 150 | 205 | 304 | 215 | 11 | 14 | - | 90 |
| - | S0-200/92 | SO | SO | 119 | 615 | 35S | 150 | 205 | 304 | 215 | 11 | 14 | - | 89 |
| - | S0-200/110 | 50 | SO | 119 | 615 | 355 | 150 | 205 | 304 | 215 | 11 | 14 | - | 90 |
| - | 40-250/130 | SO | 40 | 124 | 740 | 407 \| | 170 | 237 | 357 | 270 | 17 | 14 | - | 110 |
| - | 40-250/150 | 50 | 40 | 124 | 740 | 407 | 170 | 237 | 3S7 | 270 | 17 | 14 | - | 120 |
| - | 40*250/185 | 50 | 40 | 124 | 740 | 407 | 170 | 237 | 357 | 270 | 17 | 14 | - | 130 |
| - | 40-250/220 | ^0 | 40 | 124 | 740 | 407 | 170 | 237 | 357 | 270 | 17 | 14 | - | 140 |
| - | SO-25O/13O | ^0 | 50 | 124 | 740 | 407 | 170 | 237 | 357 | 270 | 17 | 14 | - | 110 |
| - | 50-250/150 | SO | 50 | 124 | 740 | 407 | 170 | 237 | 357 | 270 | 17 | 14 | - | 120 |
| - | SO-2SO/18S | 50 | 50 | 124 | 740 | 407 \| | 170 | 237 | 357 | 270 | 17 | 14 | - | 130 |
| - | 50-250/220 | SO | 50 | 124 | 740 | 407 | 170 | - | 357 | 270 | 17 | 14 | - | 140 |

Product *Specification (60HZ)*

# Double impeller Centrifugal pump

**Technical Data**

**Lift range:4-16BAR**

**Flow range:27m$^3$/h**

# ADVANTAGES

Eight Characteristics

Energy-saving Certificate

Large Flow Capacity

YE3 Motor IP55 ClassF All Copper Wire

Stainless Steel 304 Impeller & Shaft

Anti-corrosive Coating

NSK Bearing

Costormized Sizes & Pumps

Good Quality & Service 2-Years Guarantee

# PRODUCT INFORMATION

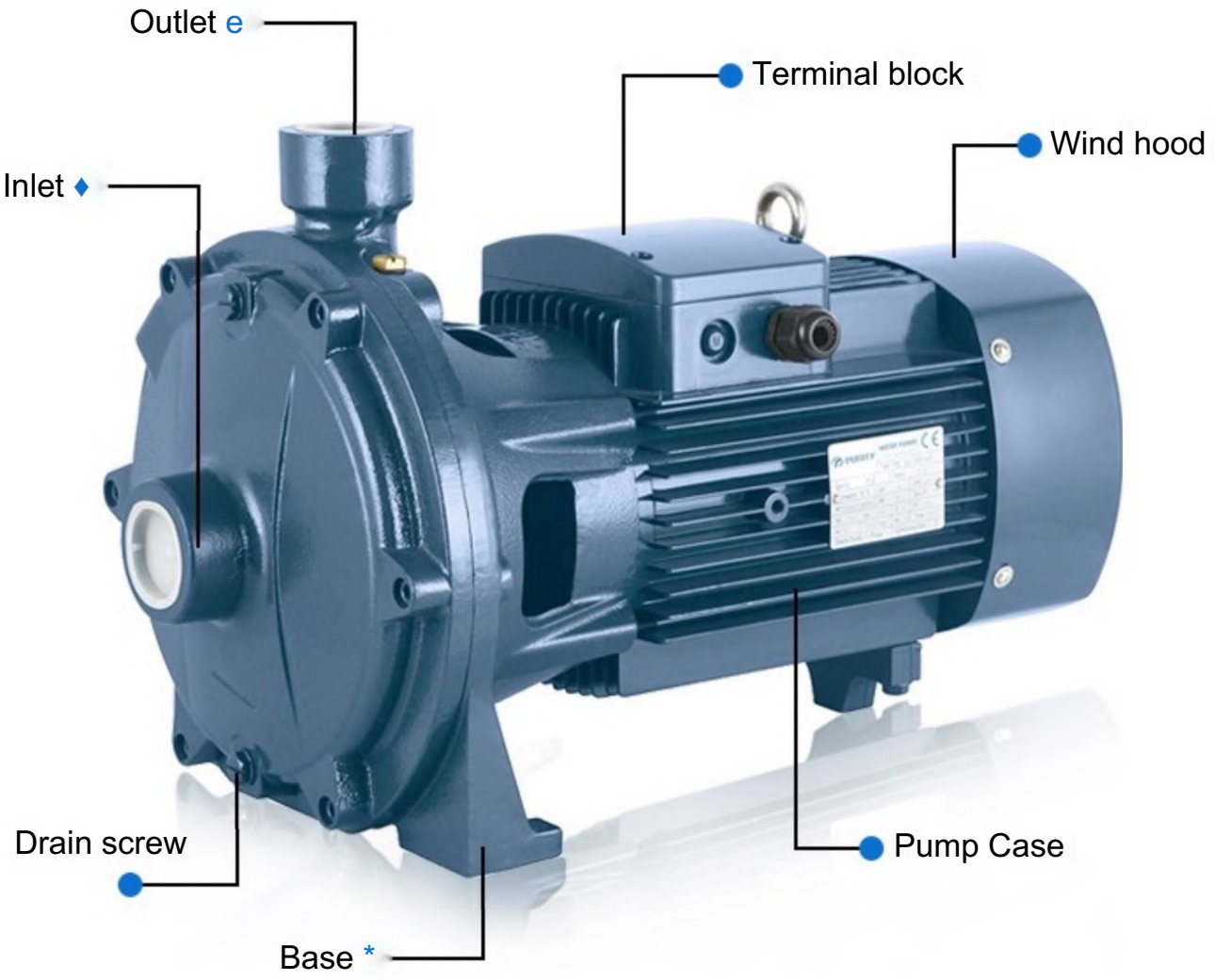


**TECHNICAL DESCRIPTION**

New EN733 standard centrifugal pump
Original design by PURITY (patented)
Both square motor & round motor available
YE3 high efficient motor, with protection IP55 class F
Pump case with anti-corrosive coating
Impeller in stainless steel AISI 304 or cast iron
Shaft in stainless steel AISI 304 or galvanized iron
Galvanized counter flange with bolts, nuts and gaskets
Quality NSK bearing, wear resistance mechanical seal

**APPLICATIONS**

Suitable for use with clean water and liquids that are not chemically

aggressive towards the materials from which the pump is made.
The EN733 centrifugal pumps are recommended for use in water supply, cleaning sets, pressure boosting, firefighting sets, irrigation, industrial applications, water circulation in climatisation sets, agricultural.

## USING LIMITS

Liquid temperature between -10°C and +120°C
Ambient temperature up to +50°C
Max. working pressure 16 bar
Continuous service S1

**TECHNICAL DATA / *DATOS TtCNICOS*** — **50 Hz n=2900 1 /min**

| MODEL *MODELO* | Power *Potencia* | | l/min | ^DELIVERY *1 CAUDAL* | | | | | | | | | | | | | | | | | | | DN |
|---|---|---|---|---|---|---|---|---|---|---|---|---|---|---|---|---|---|---|---|---|---|---|---|
| | | | | 0 | 40 | 50 | 60 | 70 | 80 | 90 | 100 | 110 | 120 | 140 | 160 | 180 | 200 | 250 | 300 | 350 | 400 | 450 | |
| | kw | hp | m³/h | 0 | 2.4 | 3 | 3.6 | 4.2 | 4.8 | 5.4 | 6 | 6.6 | 7.2 | 8.4 | 9.6 | 10.8 | 12 | 15 | 18 | 21 | 24 | 27 | mm |
| 25140/11 | 1.1 | 1.5 | | 54 | 47.5 | 44.5 | 41 | 37 | 33 | 28 | 22 | | | | | | | | | | | | 32x25 |
| 25-140/15 | 1.5 | 2 | | 67 | 60 | 57 | 54 | 50 | 45 | 40 | 32 | | | | | | | | | | | | 32x25 |
| 25-160/11 | 11 | 1.5 | | 47 | 44 | 42 | 40 | 38 | 35 | 33 | 30 | 27 | 24 | | | | | | | | | | 32x25 |
| 25-160/15 | 1.5 | 2 | | 58 | 54 | 53 | 51 | 49 | 47 | 45 | 43 | 40 | 37 | 30 | | | | | | | | | 32x25 |
| 25-160/22 | 2.2 | 3 | | 68 | 64.5 | 63 | 62 | 60 | 58 | S6 | 54 | 51 | 48 | 41 | 32 | | | | | | | | 32x25 |
| 32-200/30 | 3 | 4 | | 70 | | | | | 63 | 62 | 60.5 | 59 | 57 | 55 | 52 | 49.5 | 46.S | 36 | | | | | 40x32 |
| 32-200/40 | 4 | S.5 | | 8S | | | | | 77 | 76 | 75 | 74 | 72 | 69 | 66 | 62 | 58 | 49 | | | | | 40x32 |
| 32-210/SS | S.5 | 7.S | | 94 | | | | | 91 | 90 | 89 | 87 | 85 | 83 | 79 | 75 | 70 | 56 | | | | | 50x32 |
| 32-210/75 | 7.5 | 10 | | 112 | | | | | 110 | 109 | 108 | 107 | 105 | 102 | 99 | 94 | 89 | 74 | | | | | 50x32 |
| 40-210/55 | 5.5 | 7.5 | | 94 | | | | | 91 | % | 89 | 87 | 85 | 83 | 79 | 75 | 70 | 56 | | | | | 50x40 |
| 40-210/75 | 7.5 | 10 | | 112 | | | | | 110 | 109 | 108 | 107 | 105 | 102 | 99 | 94 | 89 | 74 | | | | | 50x40 |
| 50-180/40 | 4 | 5.5 | | 62 | | | | | 59 | 58 | 57 | 56 | 55 | 55 | SO | 48 | 44 | 36 | 31 | 23 | | | 50x50 |
| 50-180/55 | 5.5 | 7.5 | n(m) | 72 | | | | | 69 | 68 | 67 | 66 | 65 | 6S | 60 | S8 | 54 | 46 | 41 | 33 | | | 50x50 |
| 50-180/75 | 7.5 | 10 | | 84 | | | | | 81 | 80 | 79 | 78 | 76 | 75 | 72 | 72 | 66 | 58 | S3 | 45 | | | 50x50 |
| 40-200/92 | 9.2 | 12.5 | | 97 | | | | | | | | | | 91.S | 91 | 90 | 88 | 8S | 80 | 74 | 68 | 61 | 50x40 |
| 40-200/110 | 11 | IS | | 105 | | | | | | | | | | 100 | 99 | 98 | 97 | 93 | 88 | 83 | 76 | 69 | 50x40 |
| 50-200/92 | 9.2 | 12.5 | | 97 | | | | | | | | | | 91.5 | 91 | 90 | 88 | 85 | 80 | 74 | 63 | 61 | SOxSO |
| 50-200/110 | 11 | 15 | | 105 | | | | | | | | | | 100 | 99 | 98 | 97 | 93 | 88 | 83 | 76 | 69 | 50x50 |
| 40-2S0/130 | 13 | 17.5 | | 120 | | | | | | | | | | 114 | 113 | 112 | 110 | 107 | 103 | 98 | 91 | 82 | 50x40 |
| 40-250/150 | 15 | 20 | | 130 | | | | | | | | | | 124 | 123 | 122 | 120 | 117 | 113 | 108 | 102 | 92 | 50x40 |
| 40-250/185 | 18.5 | 25 | | 145 | | | | | | | | | | 139 | B8 | 137 | 136 | 131 | 126 | 121 | 114 | 107 | 50x40 |
| 40-250/220 | 22 | 30 | | 160 | | | | | | | | | | 155 | 153 | 1S2 | 151 | 146 | 141 | 135 | 130 | 122 | 50x40 |
| 50-250/130 | 13 | 17.5 | | 120 | | | | | | | | | | 114 | 113 | 112 | 110 | 107 | 103 | 98 | 91 | 82 | 50x50 |
| S0-250/1S0 | 15 | 20 | | 130 | | | | | | | | | | 124 | 123 | 122 | 120 | 117 | 113 | 108 | 102 | 92 | 50x50 |
| 5O-2SO/185 | 18.5 | 25 | | 145 | | | | | | | | | | 139 | 138 | 137 | 136 | 131 | 126 | 121 | 114 | 107 | SOxSO |
| 50-250/220 | 22 | 30 | | 160 | | | | | | | | | | 155 | 153 | 152 | 151 | 146 | 141 | 135 | 130 | 122 | SOxSO |

**We reserve the technique modrfication nght** *Nos rtitrvamos* **d** *dtrecho de la modificaci6n tunica*

## PERFORMANCE CURVE / *CURVAS DE FUNCIONAMIENTO*

50 Hz n=29001/min

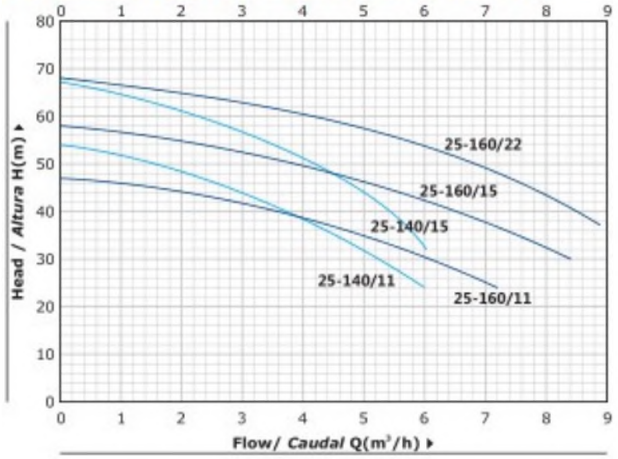


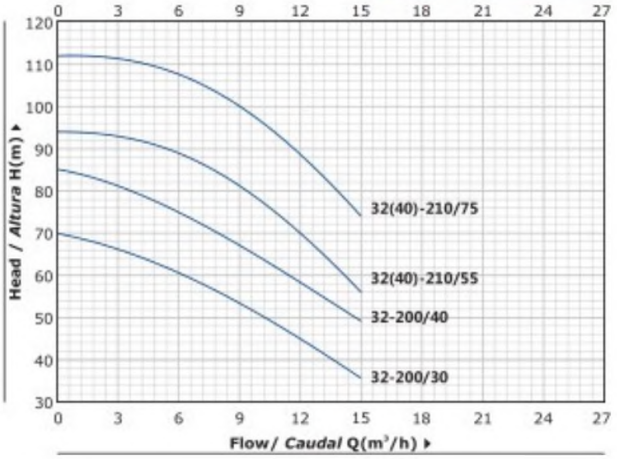


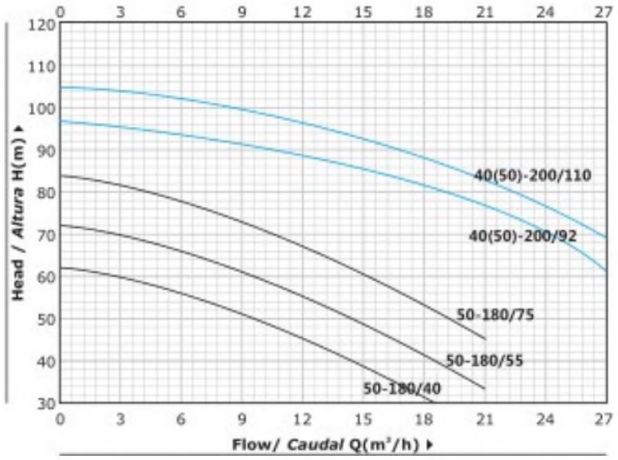


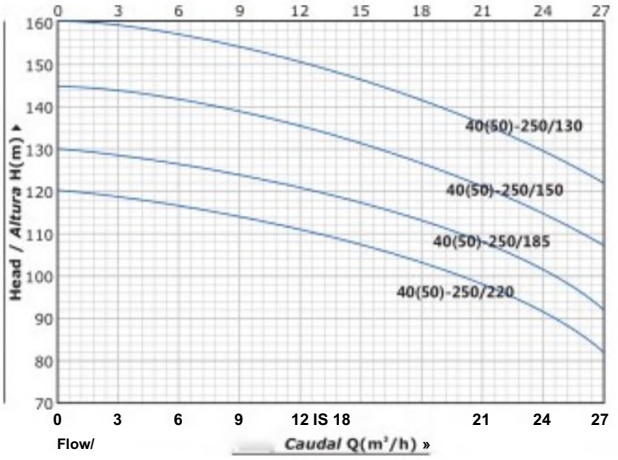

## MATERIAL DESCRIPTION / *DESCRIPCION DE MATERIAL*

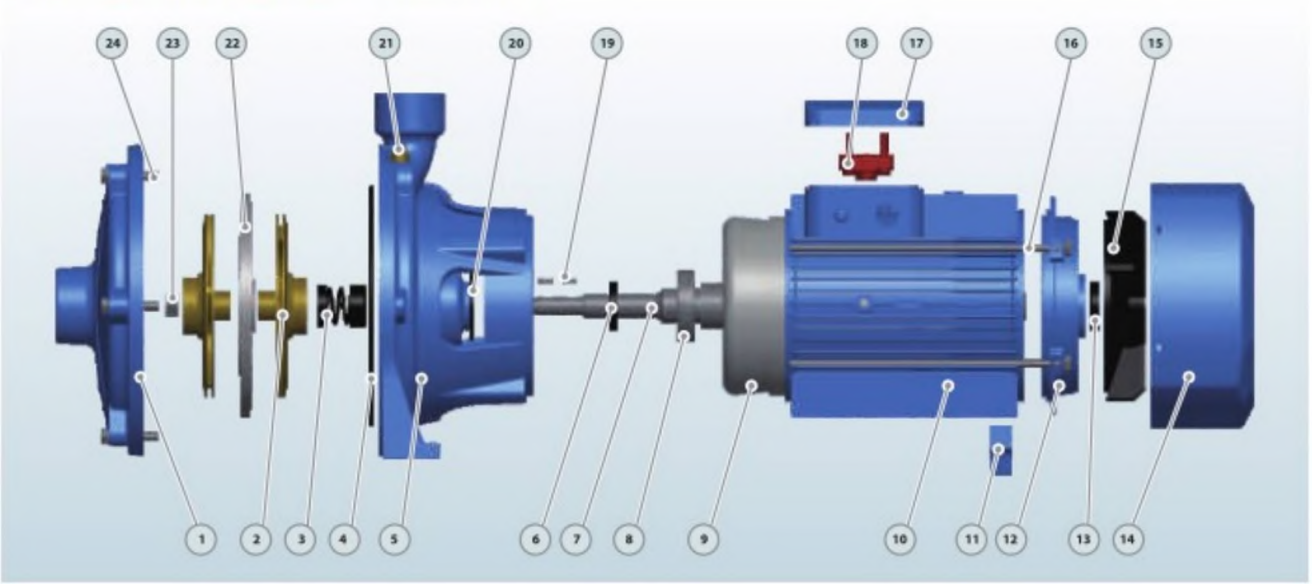


| No. | Description<br>*De cripcidn* | Material<br>*Material* |
|---|---|---|
| 1 | Pump Case<br>*Cuetpo de Bomba* | Cast iron<br>*Fundicibn* |
| 2 | Impeler<br>*tmpuisor* | Brass<br>*Bmnce* |
| 3 | Mecnartcai Seal<br>*Cierre Mec^nlco* | S»OCarborVSS304<br>*S>C'Gr9fito-lnox304* |
| 4 | Oring<br>*Junta Tdrica* | *Rubber*<br>*Caucho* |
| 5 | Connection<br>*Conexion* | Cast von<br>*FunOctAn* |
| 6 | Reinforced Seal<br>SedUo *Reforzado* | Rubber<br>Caucho |
| 7 | Shan<br>*Eje* | SS304/45# Steel<br>Inox 304/45# *Hierm* |
| 8 | Bearing<br>*Rodameoto* | Bal Beanng<br>*Bota Rodamt&nto* |

| No. | Description<br>*Descripcibn* | Material<br>*Material* |
|---|---|---|
| 9 | Wound StatonRotor<br>*Estator / Rotor* | Silicon StBel'Copper<br>*Acero al SHicia'CobrB* |
| 10 | Motor Case<br>*Cu&rpo de Motor* | Aiuminun<br>*A/umtnio* |
| 11 | Support Foot<br>*Soporte Pm* | Plastic<br>*Ptistico* |
| 12 | Back Cover<br>*Taps Trssera* | Cast iron<br>*Fundicibn* |
| 13 | Remforced Seal<br>*Seto Reforzado* | Rubber<br>*Caucho* |
| 14 | Fan Cover<br>*Tap9 V^ntfydor* | Aluminum<br>XUumhb |
| 15 | Fan<br>*V&nliacior* | Plastic<br>*PtAstico* |
| 16 | Through Bolt<br>*Pemo* | Steel<br>*Aceto* |

| No. | Description<br>*D^^cripcidn* | Material<br>*M9t9ri9l* |
|---|---|---|
| 17 | Terminai Box<br>C^a *de Bomes* | Aluminum<br>*Akjmino* |
| 18 | *Tetrnnai Boa/d*<br>TaNero *de Bomes* | Plastic<br>*PtAstlco* |
| 19 | Impeler Key<br>C/iavefa *tmputsor* | Iron<br>*Hwro* |
| 20 | Water Deflector<br>*Defiector* | Rubber<br>*Caucho* |
| 21 | Retease Va^e<br>*Tapdn Cebado* | Brass<br>fl/onoe |
| 22 | Diffuser<br>*DHusor* | Cas< iron<br>*FumfKt^n* |
| 23 | Impeller Nut<br>*Tuetca de Impuisor* | GatvanizalBd SteeJ<br>*Aceto Gal\<anizado* |
| 24 | Connection Bo*<br>*Pemo* | Stee4<br>*Acero* |

## DIMENSIONS AND WEIGHT / *DIMENSIONES Y PESOS*

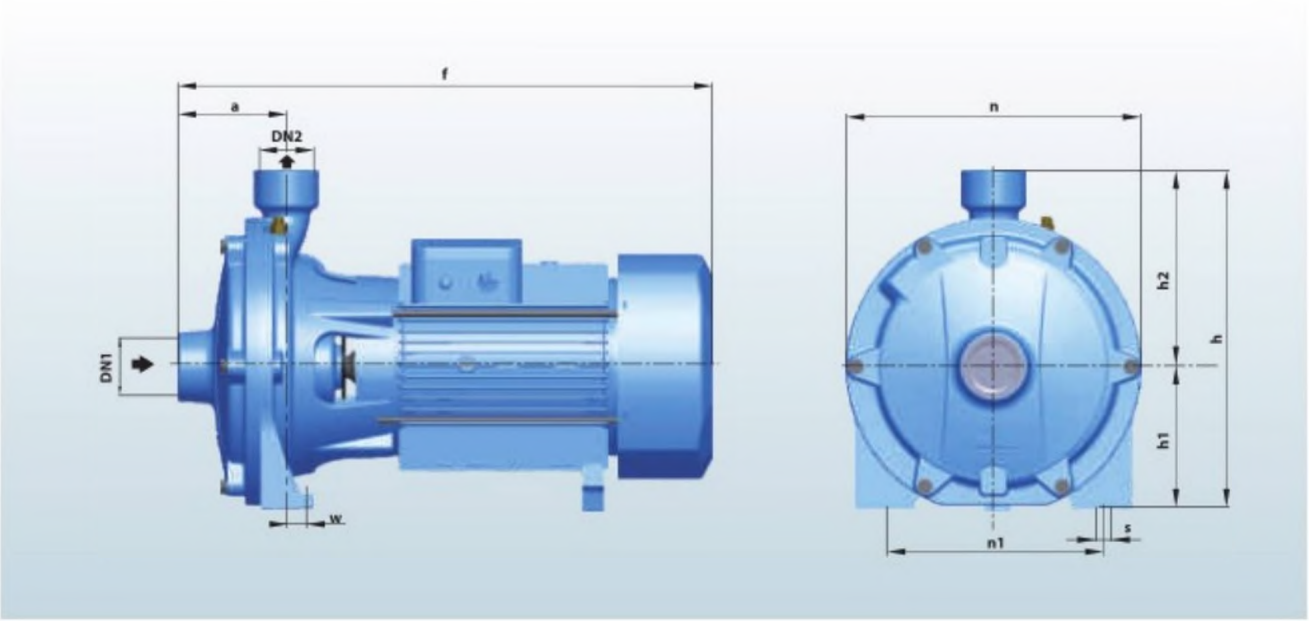


| MODEL / *MODELO* | | DIMENSIONS *1 DIMENSIONES* mm | | | | | | | | | | | kg | |
|---|---|---|---|---|---|---|---|---|---|---|---|---|---|---|
| Single-phase *Monofisico* | Three-phase *TrifAsico* | DN1 | DM2 | a | f | h | hl | h2 | n | n1 | w | 8 | ⊢ | 3- |
| 25-140/11 | 25-140/11 | 32 | 25 | 84 | 420 | 232 | 95 | 137 | 200 | 150 | 19 | 10 | 19.8 | 18.8 |
| 25-140/15 | 25* 140/15 | 32 | 25 | 84 | 420 | *232* | 95 | 137 | 200 | 150 | 19 | 10 | 24 | 23 |
| 2S160/11 | 25-160/11 | 32 | 25 | 84 | 420 | 270 | 110 | 160 | 225 | 172 | 19 | 11 | 19.8 | 18.8 |
| 2S-16O/15 | 25-160/1S | 32 | 25 | 84 | 420 | 270 | 110 | 160 | 225 | 172 | 19 | 11 | 24.2 | *23.2* |
| 2S-16O/22 | 25-160/22 | 32 | 25 | 84 | 420 | 270 | 110 | 160 | 225 | 172 | 19 | 11 | 25.5 | 24.5 |
| 32-200/30 | 32200/30 | 40 | 32 | 103 | S03 | 317 | 132 | 185 | 280 | 205 | 16 | 14 | 39 | 38 |
| - | 32-200/40 | 40 | 32 | 103 | 503 | 317 | 132 | 18S | 280 | 205 | 16 | 14 | - | 43 |
| - | 32*210/55 | 50 | 32 | 108 | 565 | 352 | 15S | 197 | 300 | 246 | 16 | 14 | - | 54 |
| - | 32-210/75 | *V)* | 32 | 108 | 565 | 352 | 155 | 197 | 300 | 246 | 16 | 14 | - | 61 |
| - | 5O-18Q/4O-55-75 | *V)* | 50 | 108 | 565 | 352 | 155 | 197 | 300 | 246 | 16 | 14 | - | 54 |
| - | 40-210/SS-7S | SO | 40 | 108 | S6S | 352 | 155 | 197 | 300 | 246 | 16 | 14 | - | 61 |
| - | 40-200/92 | 50 | 40 | 119 | 615 | 355 | 150 | 205 | 304 | 215 | 11 | 14 | - | 89 |
| - | 40-200/110 | 50 | 40 | 119 | 615 | 355 | 150 | 205 | 304 | 215 | 11 | 14 | - | 90 |
| - | S0-200/92 | SO | SO | 119 | 615 | 35S | 150 | 205 | 304 | 215 | 11 | 14 | - | 89 |
| - | S0-200/110 | 50 | SO | 119 | 615 | 355 | 150 | 205 | 304 | 215 | 11 | 14 | - | 90 |
| - | 40-250/130 | SO | 40 | 124 | 740 | 407 \| | 170 | 237 | 357 | 270 | 17 | 14 | - | 110 |
| - | 40-250/150 | 50 | 40 | 124 | 740 | 407 | 170 | 237 | 3S7 | 270 | 17 | 14 | - | 120 |
| - | 40*250/185 | 50 | 40 | 124 | 740 | 407 | 170 | 237 | 357 | 270 | 17 | 14 | - | 130 |
| - | 40-250/220 | ^0 | 40 | 124 | 740 | 407 | 170 | 237 | 357 | 270 | 17 | 14 | - | 140 |
| - | SO-25O/13O | ^0 | 50 | 124 | 740 | 407 | 170 | 237 | 357 | 270 | 17 | 14 | - | 110 |
| - | 50-250/150 | SO | 50 | 124 | 740 | 407 | 170 | 237 | 357 | 270 | 17 | 14 | - | 120 |
| - | SO-2SO/18S | 50 | 50 | 124 | 740 | 407 \| | 170 | 237 | 357 | 270 | 17 | 14 | - | 130 |
| - | 50-250/220 | SO | 50 | 124 | 740 | 407 | 170 | - | 357 | 270 | 17 | 14 | - | 140 |

# Horizontal Water Pumps PC

## PC

### TECHNICAL DESCRIPTION

- New thread port centrifugal pump
- Original design by PURITY (patented)
- Both square motor & round motor available

-YE3 high efficient motor, with protection IP55 class F

-Pump case with anti-corrosive coating

- Impeller in brass or cast iron
- Shaft in stainless steel AISI 304 or galvanized iron
- Suction and discharge port in G20 thread
- Quality NSK bearing, wear resistance mechanical seal

# Product Specification (50HZ)

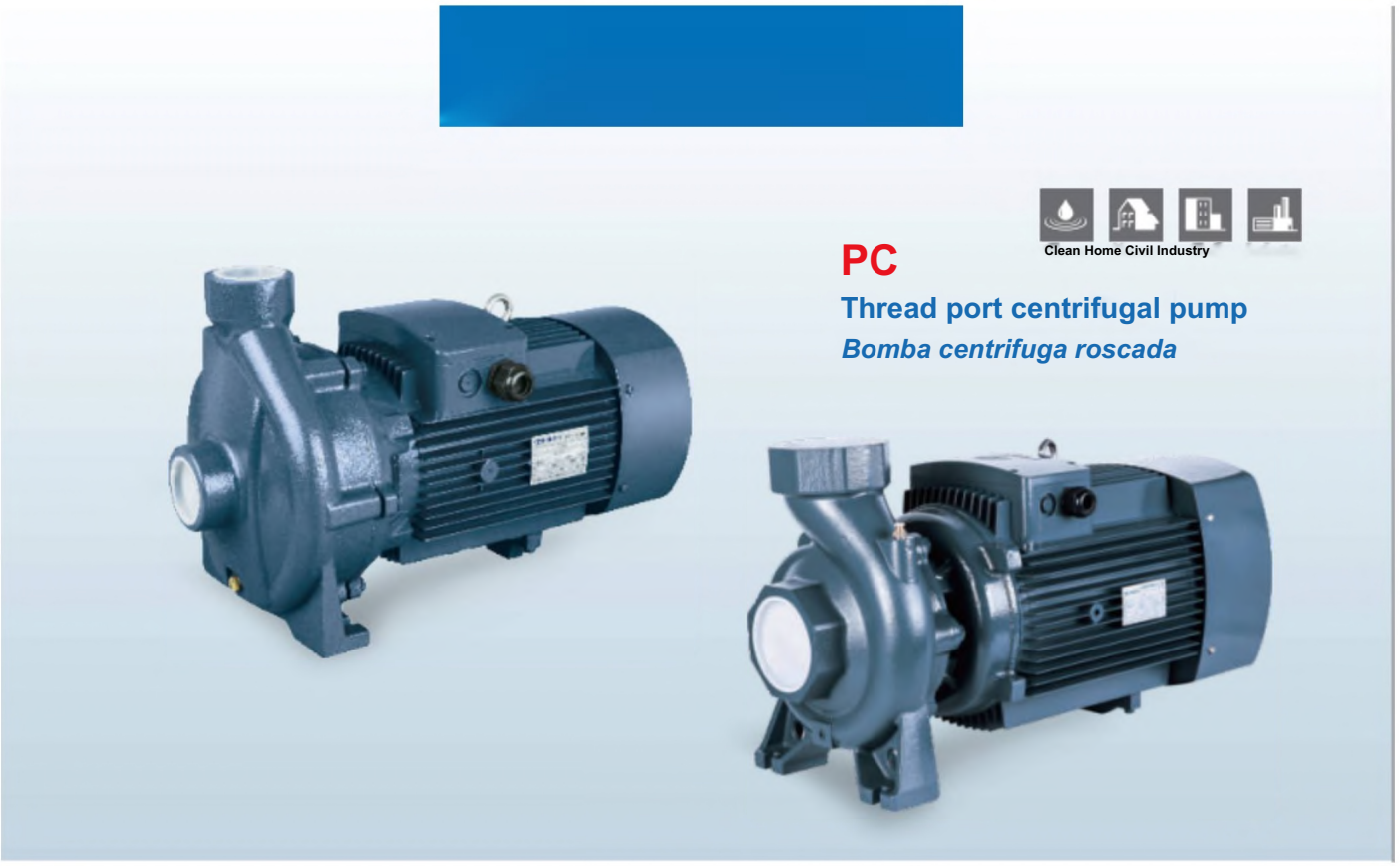


**NEW/NUEVO**

## TECHNICAL DESCRIPTION

■ New thread port centrifugal pump
• Original design by PURITY (patented)
■ Both square motor & round motor available
-YE3 high efficient motor, with protection IP55 class F
■ Pump case with anti-corrosive coating
• Impeller in brass or cast iron
■ Shaft in stainless steel AISI 304 or galvanized iron
■ Suction and discharge port in G20 thread
• Quality NSK bearing, wear resistance mechanical seal

## APPLICATIONS

■ The high efficiency and continuous duty capabilities makes these pumps ideal for use in activities such as flood and spray irrigation, drawing water from lakes, rivers and wells, or for any number of different industrial applications where the characteristics of high flow rates and mid to low head are required. Suitable for use in civil and agricultural applications.

## USING LIMITS / LIMITES DE UTILIZACION

-Liquid temperature between -10°C and +120°C
■ Ambient temperature up to +50°C
■ Max. working pressure 16 bar
■ Continuous service S1

## PATENTS / PATENTES

• Registered model PC
-Registered Patent Design no 201530476290.2

## TECHNICAL DATA / *DATOS TECNICOS*

**50 Hz n=2900 1/min**

| MODEL *MODELO* | Power *Potencia* | | 1/min | Q=DELIVERY/CAt/ZMZ. | | | | | | | | | | | | | | | | | | | | DN |
|---|---|---|---|---|---|---|---|---|---|---|---|---|---|---|---|---|---|---|---|---|---|---|---|---|
| | | | | 0 | 100 | 150 | 200 | 250 | 300 | 350 | 400 | 500 | 600 | 700 | 800 | 900 | 1000 | 1100 | 1200 | 1400 | 1500 | 1800 | 2000 | 2300 | |
| | kw | hp | m³/h | 0 | 6 | 9 | 12 | 15 | 18 | 21 | 24 | 30 | 36 | 42 | 48 | 54 | 60 | 66 | 72 | 84 | 90 | 108 | 120 | 138 | mm |
| PC 5B | 0.75 | 1 | | 179 | 164 | 165 | 15 | 14 | 13 5 | 11.4 | 95 | 5 | | | | | | | | | | | | | 50x50 |
| PC 5BM | 1.1 | 1.5 | | 20.2 | 19.2 | 19 | 18 | 17 | 16 | 14 | 12 | 7.5 | | | | | | | | | | | | | 50x50 |
| PC 5AM | 1.5 | 2 | | 2Z5 | 22 | 21.5 | 21 | 20 | 18.5 | 16.6 | 14.5 | 10 | | | | | | | | | | | | | 50x50 |
| PC220C | 2.2 | 3 | | 32 | 31 | 30.5 | 30 | 29 | 28 | 26 | 24 | 21 | | | | | | | | | | | | | 50x50 |
| PC 220B | 3 | 4 | | 38 | 37 | 36.5 | 36 | 34.8 | 33 5 | 31 2 | 29 | 25 | | | | | | | | | | | | | 50x50 |
| PC 680C | 4 | 5.5 | | 52 | 51 | 50.8 | 50.3 | 49 | 47.5 | 45 | 43 | 40 | | | | | | | | | | | | | 50x50 |
| PC 680B | 5.5 | 7.5 | | 61 | 60 | 59.5 | 59 | 58.5 | 57 | 55 | 52.5 | 50 | | | | | | | | | | | | | 50x50 |
| PC 6C | 1.1 | 1.5 | | 11.9 | | | 11.7 | 11.5 | 11.3 | 11 | 10.7 | 10.2 | 9.2 | 8 | 6.7 | 5 | 3 | | | | | | | | 50x50 |
| PC6B | 1.5 | 2 | | 14.7 | | | 14.5 | 14 3 | 14 | 13 8 | 13.5 | 12 8 | 12 | 11 | 9.7 | 82 | 67 | 5 | | | | | | | 50x50 |
| PC6A | 2.2 | 3 | | 18.5 | | | 18.1 | 18 | 17.8 | 17.5 | 17.2 | 16.8 | 16 | 15 | 13.8 | 12.2 | 10.5 | 8.3 | 6 | | | | | | 80x80 |
| PC 6H | 3 | 4 | | 21.5 | | | 21 | 20.9 | 20.7 | 20.4 | 20 | 19.5 | 18.8 | 17.8 | 16.5 | 15 | 13.5 | 112 | 9 | | | | | | 80x80 |
| PC 560C ★ | 4 | 5.5 | H(m) | 25 | | | | | | | | | 24.1 | 24 | 22.5 | 21.3 | 19.8 | 18.3 | 16.8 | 12.8 | | | | | 80x80 |
| PC 560B ★ | 55 | 75 | | 3? | | | | | | | | | 30 6 | 30 | ?« | ?6 6 | ?4 8 | 771 | 20 5 | 148 | | | | | 80x80 |
| PC 560A ★ | 7.5 | 10 | | 40 | | | | | | | | | 38 | 37 | 36 | 34.4 | 32.6 | 30.8 | 29 | 24 | 21 | | | | 80x80 |
| PC8C | 2.2 | 3 | | 18.5 | | | 18.1 | 18 | 17.8 | 17.5 | 17.2 | 16.8 | 16 | 15 | 13.8 | 12.2 | 10.5 | 8.3 | 6 | | | | | | 100x100 |
| PC 8B | 3 | 4 | | 21.5 | | | 21 | 20.9 | 20.7 | 20.4 | 20 | 19.5 | 18.8 | 17.8 | 16.5 | 15 | 13.5 | 11.2 | 9 | | | | | | 100x100 |
| PC 625C | 4 | 5.5 | | 19 | | | | | | | | | | | 17.3 | 16.8 | 15.5 | 15 | 14.5 | 13 | 11.8 | | | | 100x100 |
| PC 625B ★ | 5.5 | 7.5 | | 23 | | | | | | | | | | | 21.3 | 20.9 | 20.3 | 19.7 | 19 | 17.5 | 16.7 | 13.7 | | | 100x100 |
| PC 625A ★ | 7.5 | 10 | | 27 | | | | | | | | | | | 26 | 25 6 | 25.2 | 24 8 | 24 5 | 23 | 22.5 | 20 | 18 | | 100x100 |
| PC 660D ★ | 9.2 | 12.5 | | 33 | | | | | | | | | | | | 31.5 | 31 | 30.5 | 30 | 28 | 27.1 | 24 | 21.5 | | 100x100 |
| PC 660C ★ | 11 | 15 | | 36 | | | | | | | | | | | | 34.5 | 34 | 33.5 | 33 | 31.5 | 30.8 | 28 | 25.5 | | 100x100 |
| PC 660B ★ | 15 | 20 | | 42 | | | | | | | | | | | | 41 | 40.7 | 40.4 | 40 | 38.5 | 37.8 | 35 | 33 | 29.5 | 100x100 |
| PC 660A ★ | 18.5 | 25 | | 49 | | | | | | | | | | | | 48 | 47.7 | 47.4 | 47 | 46 | 45 | 42 | 41 | 37 | 100x100 |

## CHARACTERISTIC CURVES AND PERFORMANCE DATA

**50 Hz n=29001/min**

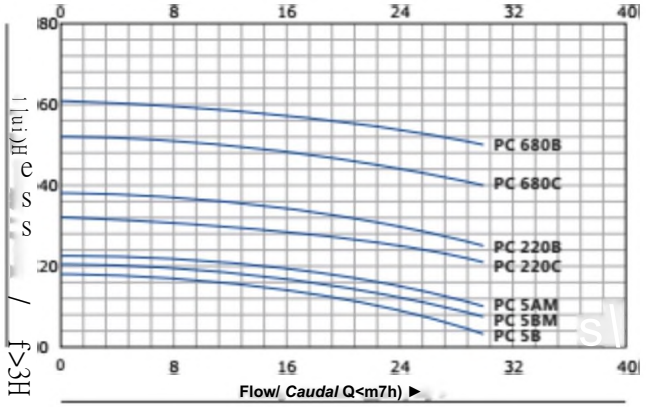


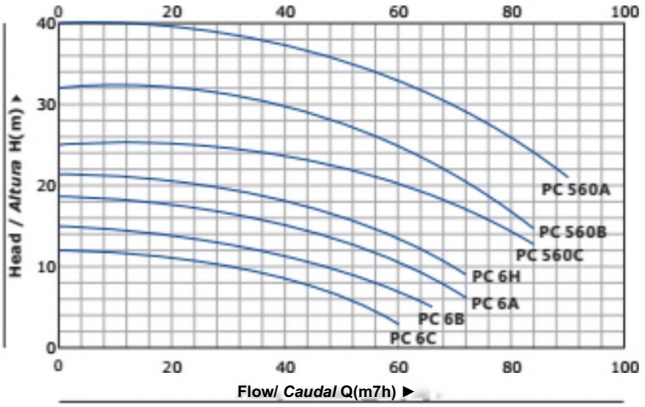

## CHARACTERISTIC CURVES AND PERFORMANCE DATA

SO Hz n=29001/min

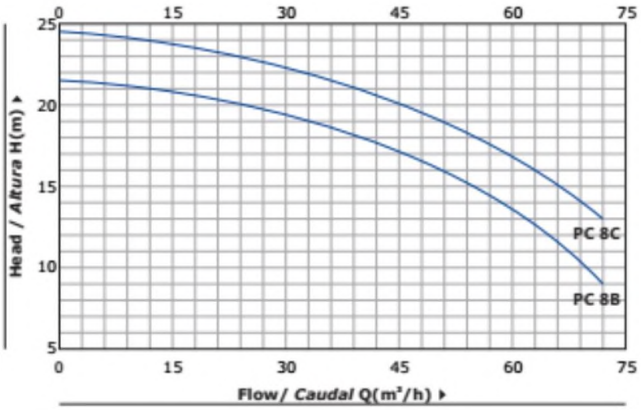


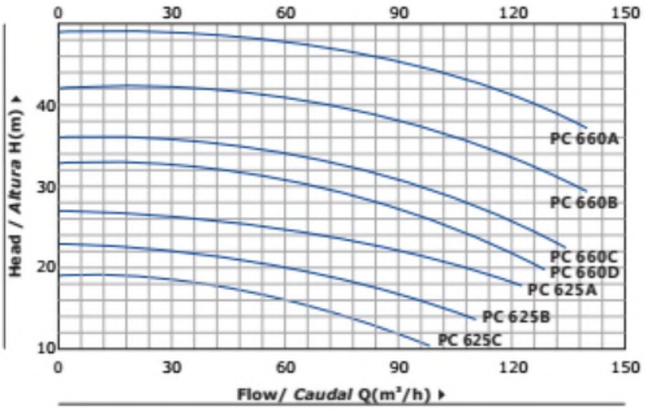


## MATERIAL DESCRIPTION / *DESCRIPCIdN DE MATERIAL*

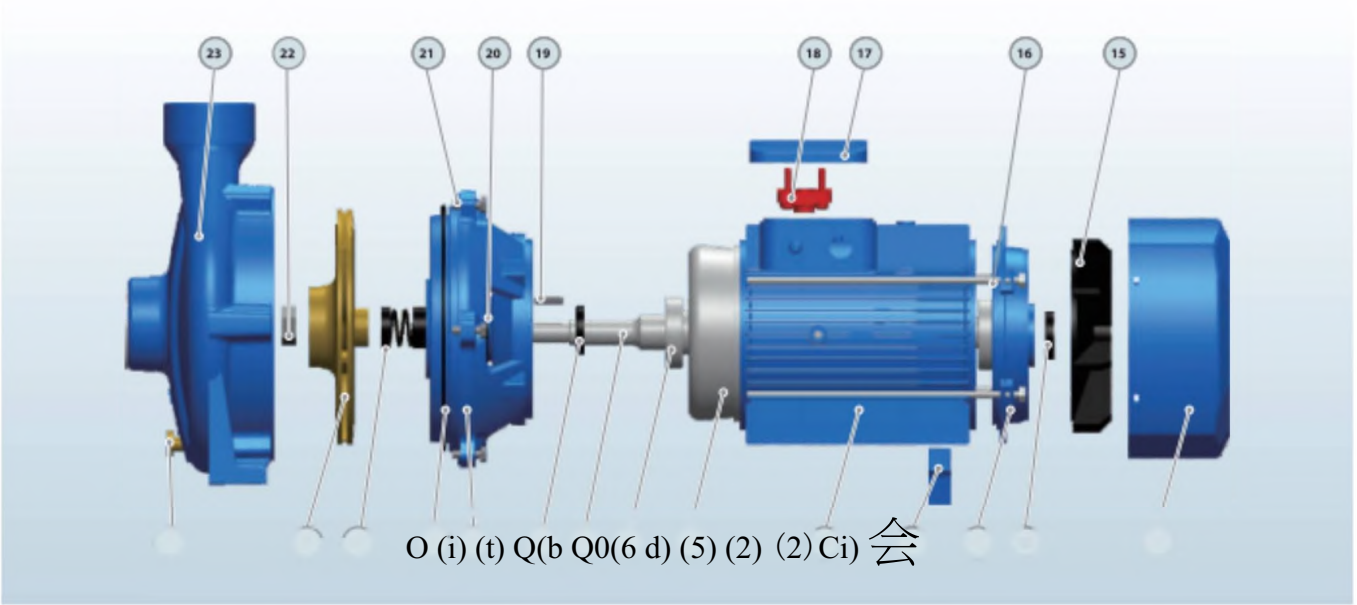


| No. | Description *Descripción* | Material *Material* | No* | Description *Descripción* | Material *Materia/* | No* | Description Des crip ción | Material *Material* |
|---|---|---|---|---|---|---|---|---|
| 1 | Release Valve *Tapón Cebado* | Brass *Bronce* | 9 | Wound Stator/Rotor *Estator / Rotor* | Siicon SteeL'Copper *Acero al SUicio/Cobre* | 17 | Terminal Box *Caja de Bomes* | Aluminum *Alummio* |
| 2 | Impeller *Impulsor* | Brass *Bronce* | | Motor Case *Cuerpo de Motor* | Aluminum *Alummio* | | *Terminal Board* *Tablero de Bomes* | Plastic *Plástico* |
| 3 | Mechanical Seal *Cierre Mecánico* | SiC.'Carbon/SS304 *SiC-Grafito-Inox304* | 11 | Support Foot *Soporte Pie* | Plastic *Plástico* | 19 | Impeller Key *Chaveta Impulsor* | Iron *Hierro* |
| 4 | O-ring *Junta Tórics* | *Rubber* *Caucho* | | Back Cover *Taps Trasera* | Cast iron *Fundicidn* | 20 | Water Deflector Deflector | Rubber *Caucho* |
| 5 | Connection *Conexión* | Cast iron *Fundicidn* | 13 | Reinforced Seal *SeNo Reforzado* | Rubber *Caucho* | 21 | Connection Bolt *Pemo* | Steel *Acero* |
| 6 | Reinforced Seal *SeOo Reforzado* | Rubber *Caucho* | 14 | Fan Cover *Taps Ventiador* | Aluminum *Aluminio* | 22 | Impeller Nut *Tuerca de Impulsor* | Gatvanizated Steel *Acero Galvanizado* |
| 7 | Shaft 印 | SS304/45# Steel *Inox 304/45# Hierro* | 15 | Fan *VentUador* | Plastic *Plástico* | 23 | Pump Case *Cuerpo de Bomba* | Cast iron *Fundicidn* |
| 8 | Bearing *Rodamiento* | Ball Bearing *Bola Rodamiento* | 16 | Through Bolt *Pemo* | Steel *Acero* | | | |

## DIMENSIONS AND WEIGHT / *DIMENSIONES YPE^OS*

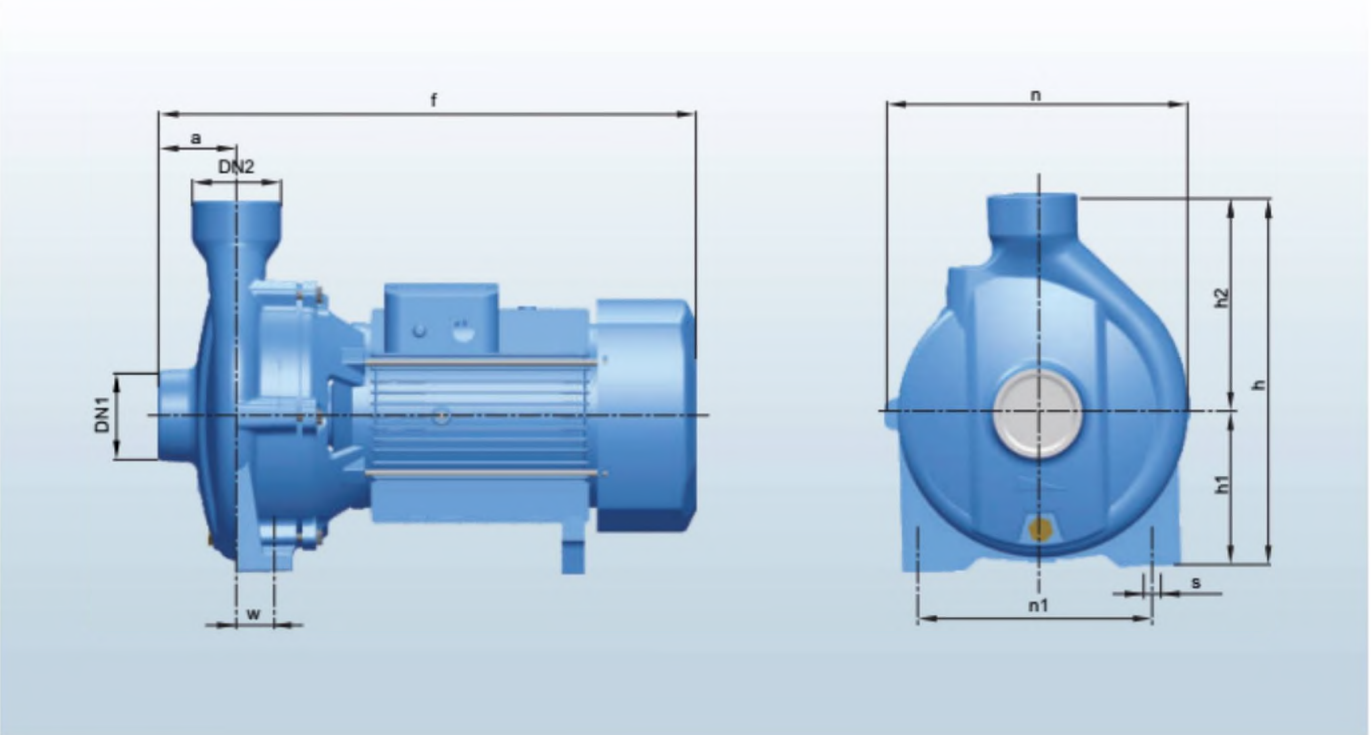


| MODEL / *MODELO* | | DIMENSIONS/ *DIMENSIONES* mm | | | | | | | | | | | kg |
|---|---|---|---|---|---|---|---|---|---|---|---|---|---|
| Single-phase Monofásico | Three-phase Trifásico | DN1 | DN2 | a | f | h | hi | h2 | n | n1 | w | s | 3- |
| PC 5B | PC SB | 50 | 50 | 51 | 398 | 26S | 105 | 160 | 206 | 160 | 1 | 11 | 18 | 17 |
| PC 5BM | PC 5BM | 50 | 50 | 51 | 398 | 265 | 105 | 160 | 206 | 160 | 1 | 11 | 19.9 | 18.9 |
| PC 5AM | PC 5AM | 50 | 50 | 51 | 398 | 265 | 105 | 160 | 206 | 160 | 1 | 11 | 21.9 | 20.9 |
| PC 220C | PC 220C | 50 | 50 | 75 | 472 | 322 | 132 | 190 | 245 | 165 | 40 | 14 | 29.5 | 28.5 |
| - | PC 220B | 50 | 50 | 75 | 472 | 322 | 132 | 190 | 245 | 165 | 40 | 14 | ■ | 32.3 |
| - | PC 680C | 50 | 50 | 75 | 535 | 335 | 140 | 195 | 273 | 190 | 40 | 14 | - | 42 |
| - | PC 680B | 50 | 50 | 75 | 535 | 335 | 140 | 195 | 273 | 190 | 40 | 14 | - | 47 |
| *PC 6C* | PC 6C | 80 | 80 | 68 | 435 | 317 | 120 | 197 | 240 | 190 | 6 | 12 | 25 | 24 |
| *PC* 6B | PC 6B | 80 | 80 | 68 | 435 | 317 | 120 | 197 | 240 | 190 | 6 | 12 | 26.5 | 25.5 |
| PC 6A | PC GA | 80 | 80 | 68 | 435 | 317 | 120 | 197 | 240 | 190 | 6 | 12 | 27.7 | 26.7 |
| - | PC 6H | 80 | 80 | 68 | 435 | 317 | 120 | 197 | 240 | 190 | 6 | 12 | - | 35 |
| ■ | PC 560C | 80 | 80 | 79 | 578 | 372 | 163 | 209 | 263 | 212 | 32 | 16 | - | 52 |
| - | PC 560B | 80 | 80 | 79 | 578 | 372 | 163 | 209 | 263 | 212 | 32 | 16 | ■ | 64 |
| - | PC 560A | 80 | 80 | *79* | 578 | 372 | 163 | 209 | 263 | 212 | *32* | 16 | - | 71 |
| *PC8C* | PC 8C | 100 | 100 | *70* | 482 | 322 | 120 | 202 | 245 | 190 | *30* | 14 | 31 | 30 |
| - | PC 8B | 100 | 100 | 70 | 482 | 322 | 120 | 202 | 245 | 190 | *30* | 14 | - | 35 |
| - | PC 625C | 100 | 100 | 85 | 593 | 373 | 163 | 210 | 267 | 212 | *32* | 16 | - | 63 |
| - | PC 625B | 100 | 100 | 85 | 593 | 373 | 163 | 210 | 267 | 212 | *32* | 16 | - | 68 |
| - | PC 625A | 100 | 100 | 85 | 593 | 373 | 163 | 210 | 267 | 212 | *32* | 16 | - | 74 |
| - | PC 660D | 100 | 100 | 85 | 605 | 415 | 186 | 229 | 305 | 222 | *49* | 16 | - | 90 |
| - | PC 660C | 100 | 100 | 85 | 605 | 415 | 186 | 229 | 305 | 222 | *49* | 16 | - | 106 |
| - | PC 660B | 100 | 100 | 85 | 605 | 415 | 186 | 229 | 305 | 222 | 49 | 16 | - | 134 |
| - | PC 660A | 100 | 100 | 85 | 605 | 415 | 186 | 229 | 305 | 222 | 49 | 16 | - | 155 |

# Product Specification (60HZ)


**NEW/NUEVO**

## TECHNICAL DESCRIPTION

■ New thread port centrifugal pump
• Original design by PURITY (patented)
■ Both square motor & round motor available
-YE3 high efficient motor, with protection IP55 class F
-Pump case with anti-corrosive coating
• Impeller in brass or cast iron
■ Shaft in stainless steel AISI 304 or galvanized iron
■ Suction and discharge port in G20 thread
• Quality NSK bearing, wear resistance mechanical seal

## APPLICATIONS

■ The high efficiency and continuous duty capabilities makes these pumps ideal for use in activities such as flood and spray irrigation, drawing water from lakes, rivers and wells, or for any number of different industrial applications where the characteristics of high flow rates and mid to low head are required. Suitable for use in civil and agricultural applications.

## USING LIMITS / LIMITES DE UTILIZACION

■ Liquid temperature between -10°C and +120°C
■ Ambient temperature up to +50°C
■ Max. working pressure 16 bar
■ Continuous service S1

## PATENTS / PATENTES

■ Registered model PC
-Registered Patent Design no 201530476290.2

## TECHNICAL *DKVKIDATOS TtCNICOS*

60 Hz n=3450 1/min

| MODEL *MODELO* | Power *Potenda* | | l/min | Q«D ELI VERY / *CAUDAL* | | | | | | | | | | | | | | | | | | | | | nN |
|---|---|---|---|---|---|---|---|---|---|---|---|---|---|---|---|---|---|---|---|---|---|---|---|---|---|
| | | | | 0 | 100 | 150 | 200 | 250 | 300 | 350 | 400 | 500 | 600 | 700 | 800 | 900 | 1000 | 1100 | 1200 | 1400 | 1500 | 1800 | 2000 | 2300 | |
| | kw | hp | mVh | 0 | 6 | 9 | 12 | 15 | 18 | 21 | 24 | 30 | 36 | 42 | 48 | 54 | 60 | 66 | 72 | 84 | 90 | 108 | 120 | 138 | mm |
| PC 5B | 0.75 | 1 | | 17.9 | 16.4 | 165 | 15 | 14 | 13.5 | 1L4 | 9.5 | 5 | | | | | | | | | | | | | 50x50 |
| PC 5BM | LI | L5 | | 20.2 | 192 | 19 | 18 | 17 | 16 | 14 | 12 | 7.5 | | | | | | | | | | | | | 50x50 |
| PC SAM | L5 | 2 | | 225 | 22 | 21.5 | 21 | 20 | 18.5 | 16.6 | 14.5 | 10 | | | | | | | | | | | | | 50x50 |
| PC220C | 22 | 3 | | 32 | 31 | 30.5 | 30 | 29 | 28 | 26 | 24 | 21 | | | | | | | | | | | | | 50x50 |
| PC220B | 3 | 4 | | 38 | 37 | 36.5 | 36 | 34.8 | 33.5 | 312 | 29 | 25 | | | | | | | | | | | | | 50x50 |
| PC220A | 4 | 55 | | 49 | 48 | 47 | 46 | 443 | 43.5 | 415 | 39.5 | 36 | | | | | | | | | | | | | 50x50 |
| PC680C | 4 | 5.5 | | 52 | 51 | 50.8 | 50.3 | 49 | 47.5 | 45 | 43 | 40 | | | | | | | | | | | | | 50x50 |
| PC680B | 5.5 | 7.5 | | 61 | 60 | 59.5 | 59 | 5&5 | 57 | 55 | 52.5 | 50 | | | | | | | | | | | | | 50x50 |
| PC680A | 7.5 | 10 | | 75 | 74.5 | 743 | 74 | 73.5 | 725 | 71 | 68.5 | 65 | 60 | | | | | | | | | | | | 50x50 |
| PC6C | LI | 15 | | 1L9 | | | 1L7 | 1L5 | 113 | 11 | 10.7 | 10.2 | 92 | 8 | 67 | 5 | 3 | | | | | | | | 80x80 |
| PC6B | L5 | 2 | | 14.7 | | | 14.5 | 143 | 14 | 13.8 | 135 | 128 | 12 | 11 | 9.7 | 8.2 | 6.7 | 5 | | | | | | | 80x80 |
| PC6A | Z2 | 3 | | 18.5 | | | 18.1 | 18 | 17.8 | 17.5 | 172 | 16.8 | 16 | 15 | 13.8 | 122 | 10.5 | 83 | 6 | | | | | | 80x80 |
| PC6H | 3 | 4 | H(m) | 2L5 | | | 21 | 20.9 | 20.7 | 20.4 | 20 | 19.5 | 18.8 | 17.8 | 16.5 | 15 | 13.5 | 112 | 9 | | | | | | 80x80 |
| PC 560C ★ | 4 | 55 | | 25 | | | | | | | | | 24.1 | 24 | 225 | 213 | 19.8 | 183 | 16.8 | 128 | | | | | 80x80 |
| PC 560B ★ | 5.5 | 7.5 | | 32 | | | | | | | | | 30.6 | 30 | 28 | 26.6 | 24.8 | 227 | 20.5 | 14.8 | | | | | 80x80 |
| PC 560A ★ | 7.5 | 10 | | 40 | | | | | | | | | 38 | 37 | 36 | 34.4 | 326 | 303 | 29 | 24 | 21 | | | | 80x80 |
| PC8C | 2.2 | 3 | | 18.5 | | | l&l | 18 | 17.8 | 17.5 | 172 | 16.8 | 16 | 15 | 13.8 | 122 | 10.5 | 83 | 6 | | | | | | 100x100 |
| PC8B | 3 | 4 | | 2L5 | | | 21 | 203 | 20.7 | 20.4 | 20 | 19.5 | 183 | 17.8 | 16.5 | 15 | 13.5 | 112 | 9 | | | | | | 100x100 |
| PC8A | 4 | 5.5 | | 24.5 | | | 24 | 233 | 23.5 | 23.3 | 23 | 225 | 213 | 20.8 | 19.5 | 183 | 16.8 | 15 | 13 | | | | | | 100x100 |
| PC 625B ★ | 5.5 | 75 | | 23 | | | | | | | | | | | 213 | 203 | 203 | 19.7 | 19 | 17.5 | 16.7 | 13.7 | | | 100x100 |
| PC625A* | 7.5 | 10 | | 27 | | | | | | | | | | | 26 | 25.6 | 25.2 | 24.8 | 24.5 | 23 | 22.5 | 20 | 18 | | 100x100 |
| PC 660D ★ | 9.2 | 125 | | 33 | | | | | | | | | | | | 31.5 | 31 | 30.5 | 30 | 28 | 27 J. | 24 | 215 | | 100x100 |
| PC 660C ★ | 11 | 15 | | 36 | | | | | | | | | | | | 345 | 34 | 33.5 | 33 | 3L5 | 303 | 28 | 25.5 | | 100x100 |
| PC 660B ★ | 15 | 20 | | 42 | | | | | | | | | | | | 41 | 40.7 | 40.4 | 40 | 3&5 | 373 | 35 | 33 | 29.5 | 100x100 |
| PC 660A ★ | 1&5 | 25 | | 49 | | | | | | | | | | | | 48 | 47.7 | 47.4 | 47 | 46 | 45 | 42 | 41 | 37 | 100x100 |

★=Cast iron impeller / *Impulsoren fundicidn*

## CHARACTERISTIC CURVES AND PERFORMANCE DATA

60 Hz n=3450 1/min

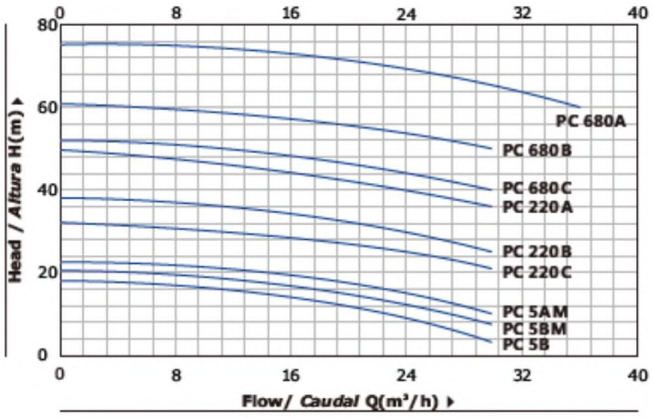


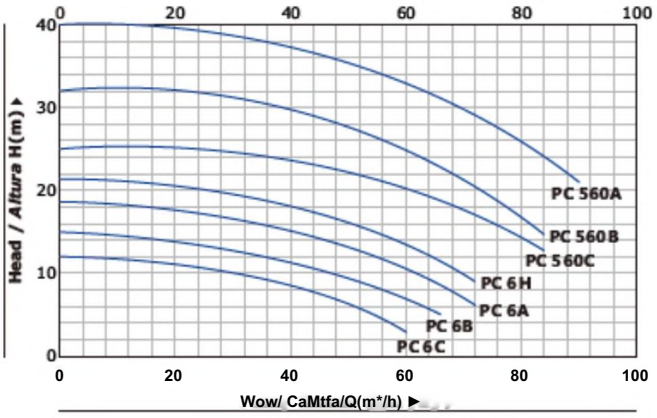

## CHARACTERISTIC CURVES AND PERFORMANCE DMA

60 Hz n=34501/min

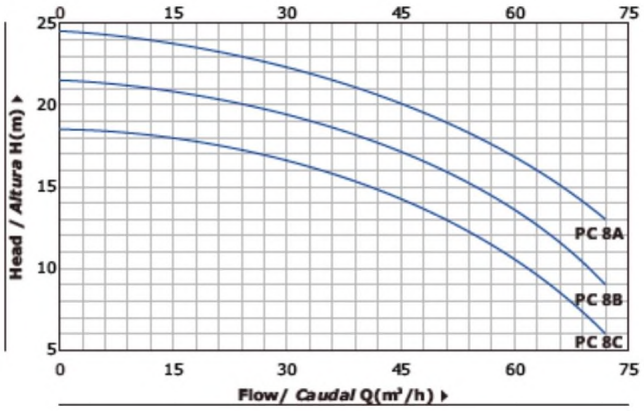


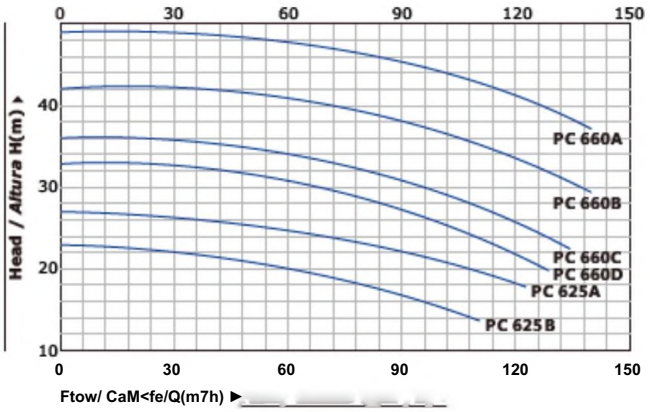


## MATERIAL DESCRIPTION / *DESCRIPCIdN DE MATERIAL*

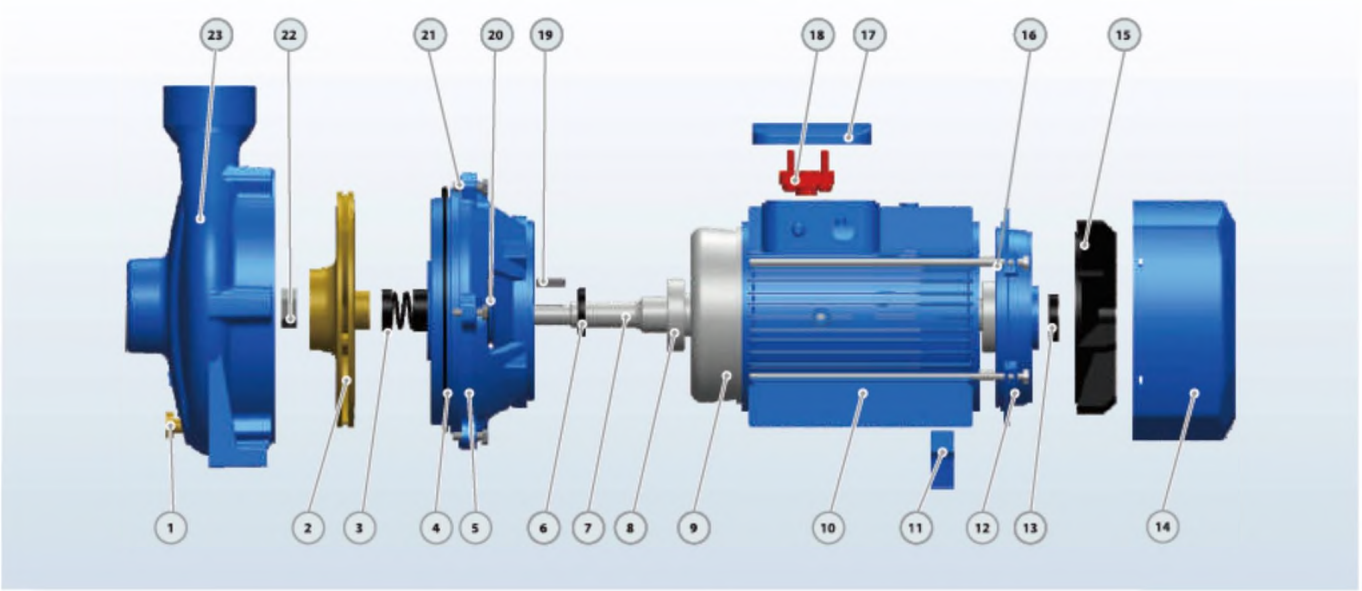


| No. | Description<br>*Descripciitn* | Material<br>*Material* | N<x | Description<br>*Descripción* | Material<br>*Mat&riaJ* | No* | Description<br>*Descripción* | Material<br>*Material* |
|---|---|---|---|---|---|---|---|---|
| 1 | Release Valve<br>*Tapón Cebado* | Brass<br>*Bronce* | 9 | Wound Stator/Rotor<br>*Estator/Rotor* | Silicon SteelCopper<br>*Acero al SUicio/Cobre* | 17 | Terminal Box<br>*Caja de Bomes* | Aluminum<br>*Aluminio* |
| 2 | Impeller<br>*Impulsor* | Brass<br>*Bronce* | | Motor Case<br>*Cuerpo de Motor* | Aluminum<br>*Alummto* | | *Terminal Board*<br>*Tablero de Bomes* | Plastic<br>*Plástico* |
| 3 | Mechanical Seal<br>*Cierre Mecánico* | SiC/Carbon/SS304<br>*SiC-Grafito-Inox304* | 11 | Support Foot<br>Soporte *Pie* | Plastic<br>*Plástico* | 19 | Impeller Key<br>*Chaveta Impulsor* | Iron<br>*Hierro* |
| 4 | O*ring<br>*Junta Tóries* | *Rubber*<br>*Caucho* | | Back Cover<br>*Tape Trasera* | Cast iron<br>*Fundicidn* | 20 | Water Deflector<br>*Deflector* | Rubber<br>*Caucho* |
| 5 | Connection<br>*Conexión* | Cast iron<br>*Fundicidn* | 13 | Reinforced Seal<br>Seffo *Reforzado* | Rubber<br>*Caucho* | 21 | Connection Bolt<br>*Pemo* | Steel<br>*Acero* |
| 6 | Reinforced Seal<br>*SeOo Reforzado* | Rubber<br>*Caucho* | 14 | Fan Cover<br>*Tape Ventiador* | Aluminum<br>*Aluminio* | 22 | Impeller Nut<br>*Tuerca de Impulsor* | Gatvanizated Steel<br>*Acero Galvanizado* |
| 7 | Shaft<br>昧 | SS304,'45# Steel<br>*Inox 304/45林 Hierro* | 15 | Fan<br>*VentHador* | Plastic<br>*Plástico* | 23 | Pump Case<br>*Cuerpo de Bomba* | Cast iron<br>*Fundicidn* |
| 8 | Bearing<br>*Rodamiento* | Ball Bearing<br>*Bota Rodamiento* | 16 | Through Bolt<br>*Pemo* | Steel<br>*Acero* | | | |

## DIMENSIONS AND WEIGHT/ *DIMENSIONES YPESOS*

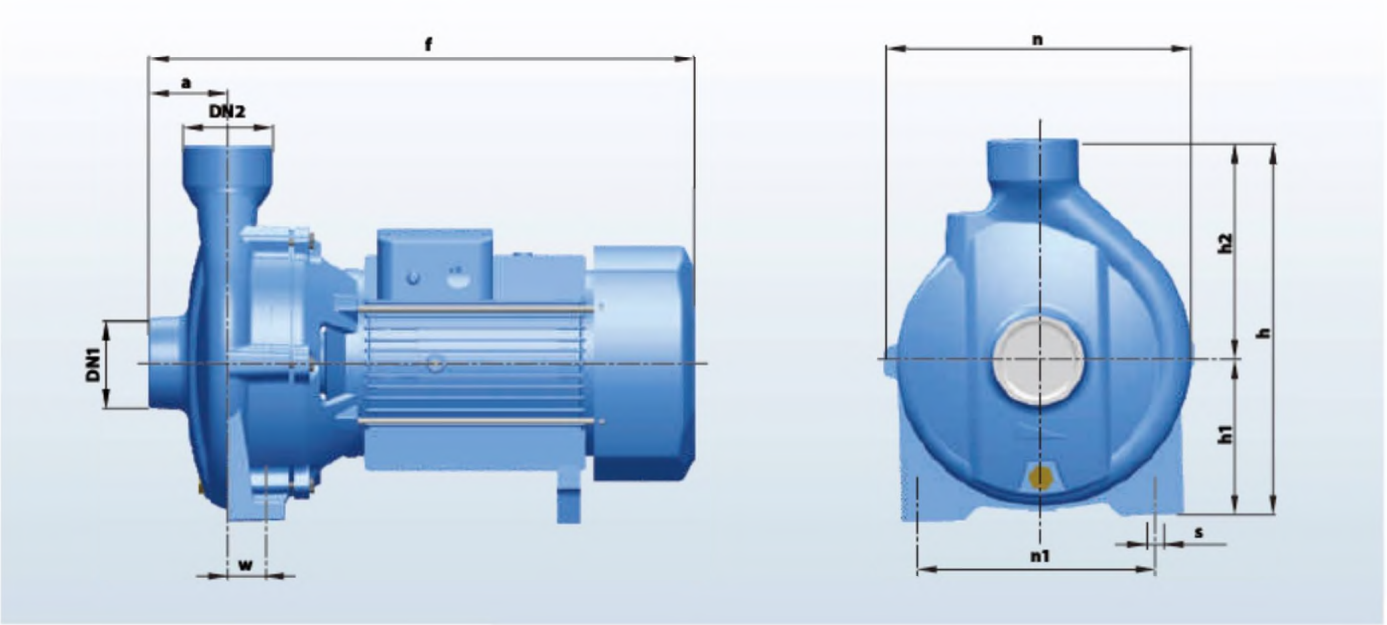


| MODEL / *MODELO* | | DIMENSIONS/ *DIMENSIONES* mm | | | | | | | | | | | kg | |
|---|---|---|---|---|---|---|---|---|---|---|---|---|---|---|
| Single jihase *Monofasico* | Three-phase *Trifasico* | DN1 | DN2 | a | f | h | hl | h2 | n | n1 | w | s | ⊢ | 3~ |
| PC 5B | PC 5B | 50 | 50 | 51 | 398 | 265 | 105 | 160 | 206 | 160 | 1 11 | | 18 | 17 |
| PC 5BM | PC 5BM | 50 | 50 | 51 | 398 | 265 | 105 | 160 | 206 | 160 | 1 11 | | 19.9 | 18.9 |
| PC 5AM | PC 5AM | 50 | 50 | 51 | 398 | 265 | 105 | 160 | 206 | 160 | 1 11 | | 21.9 | 20.9 |
| PC 220C | PC 220C | 50 | 50 | 75 | 472 | 322 | 132 | 190 | 245 | 165 | 40 | 14 | 29.5 | 28.5 |
| - | PC 220B | 50 | 50 | 75 | 472 | 322 | 132 | 190 | 245 | 165 | 40 | 14 | - | 32.3 |
| - | PC 680C | 50 | 50 | 75 | 535 | 335 | 140 | 195 | 273 | 190 | 40 | 14 | - | 42 |
| - | PC 680B | 50 | 50 | 75 | 535 | 335 | 140 | 195 | 273 | 190 | 40 | 14 | - | 47 |
| PC6C | PC 6C | 80 | 80 | 68 | 435 | 317 | 120 | 197 | 240 | 190 | 6 | 12 | 25 | 24 |
| PC 6B | PC 6B | *80* | 80 | 68 | 435 | 317 | 120 | 197 | 240 | 190 | 6 | 12 | 26.5 | 25.5 |
| PC 6A | PC GA | *80* | 80 | 68 | 435 | 317 | 120 | 197 | 240 | 190 | 6 | 12 | 27.7 | 26.7 |
| - | PC 6H | *80* | 80 | 68 | 435 | 317 | 120 | 197 | 240 | 190 | 6 | 12 | • | 35 |
| - | PC 560C | 80 | 80 | 79 | 578 | 372 | 163 | 209 | 263 | 212 | 32 | 16 | - | 52 |
| - | PC 560B | 80 | 80 | 79 | 578 | 372 | 163 | 209 | 263 | 212 | 32 | 16 | - | 64 |
| ■ | PC 560A | 80 | 80 | 79 | 578 | 372 | 163 | 209 | 263 | 212 | 32 | 16 | - | 71 |
| PC8C | PC8C | 100 | 100 | 70 | 482 | 322 | 120 | 202 | 245 | 190 | 30 | 14 | 31 | 30 |
| - | PC 8B | 100 | 100 | 70 | 482 | 322 | 120 | 202 | 245 | 190 | 30 | 14 | - | 35 |
| - | PC 625C | 100 | 100 | 85 | 593 | 373 | 163 | 210 | 267 | 212 | 32 | 16 | - | 63 |
| - | PC 625B | 100 | 100 | 85 | 593 | 373 | 163 | 210 | 267 | 212 | *32* | 16 | - | 68 |
| - | PC 625A | 100 | 100 | 85 | 593 | 373 | 163 | 210 | 267 | 212 | *32* | 16 | - | 74 |
| - | PC 660D | 100 | 100 | 85 | 605 | 415 | 186 | 229 | 305 | 222 | 49 | 16 | - | 90 |
| - | PC 660C | 100 | 100 | 85 | 605 | 415 | 186 | 229 | 305 | 222 | 49 | 16 | - | 106 |
| - | PC 660B | 100 | 100 | 85 | 605 | 415 | 186 | 229 | 305 | 222 | 49 | 16 | - | 134 |
| - | PC S60A | 100 | 100 | 85 | 605 | 415 | 186 | 229 | 305 | 222 | 49 | 16 | - | 155 |

# Horizontal Water Pumps PCM

## PCM

### TECHNICAL DESCRIPTION

- New self-priming centrifugal pump
- Original design by PURITY (patented)
- Both square motor & round motor available

-YE3 high efficient motor, with protection IP55 class F

-Pump case with anti-corrosive coating

- Impeller in stainless steel AISI 304 or cast iron
- Shaft in stainless steel AISI 304 or galvanized iron
- Suction and discharge port in G20 thread
- Quality NSK bearing, wear resistance mechanical seal

# Product Specification (50HZ)


**NEW/NUEVO**

## TECHNICAL DESCRIPTION

-New self-priming centrifugal pump
-Original design by PURITY (patented)
■ Both square motor & round motor available
-YE3 high efficient motor, with protection IP55 class F
-Pump case with anti-corrosive coating
■Impeller in stainless steel AISI 304 or cast iron
■ Shaft in stainless steel AISI 304 or galvanized iron
■ Suction and discharge port in G20 thread
• Quality NSK bearing, wear resistance mechanical seal

## APPLICATIONS

■ Suitable for use with liquids that are not chemically aggressive towards the materials from which the pump is made.
• These pumps are recommended for use in irrigation pumps,cooling systems,air conditioning systens,water supply systems,liquids transfer, pressure systems,

## USING LIMITS

■ Liquid temperature between -10°C and +120°C
■ Ambient temperature up to +50°C
■ Max. working pressure 10 bar
■ Continuous service S1

## TECHNICAL DATA / *DATOS TtCNICOS*

50 Hz n=29001/min

| MODEL *MODELO* | Power *Potencia* | | k/min | Q«DELIVERY / *CAUDAL* | | | | | | | | | | | DN |
|---|---|---|---|---|---|---|---|---|---|---|---|---|---|---|---|
| | | | | 0 | 5 | 10 | 20 | 30 | 40 | 50 | 60 | 70 | 80 | 90 | |
| | kw | hp | m³/h | 0 | 0.3 | 0.6 | 1.2 | 1.« | 2.4 | 3.0 | 3.6 | 4.2 | 4.8 | S.4 | mm |
| PCm 1S8 | 0.75 | 1 | H(m) | 33 | 33 | 33 | 32.5 | 32 | 3L5 | 30 | 29 | 27.5 | 26 | 24.5 | 2Sx25 |

## TECHNICAL DATA / *DATOS TtCNfCOS*

50 Hz n=2900 1 /min

| MODEL *MODELO* | Power *Potency* | | Vmin | Q«DELIVERY / *CAUDAL* | | | | | | | | | | | DN |
|---|---|---|---|---|---|---|---|---|---|---|---|---|---|---|---|
| | | | | 0 | 5 | 10 | 20 | 25 | 30 | 40 | 45 | 50 | 60 | 70 | |
| | kw | hp | m³/h | 0 | 0.3 | 0.6 | U | 13 | 1.8 | 2.4 | 2.7 | 3.0 | 3.6 | 4.2 | mm |
| PJm 10M | 0.75 | 1 | H(m) | 50 | 47 | 44 | 38.5 | 36 | 14 | 29.S | 27.S | 26 | 225 | 20 | 2Sx25 |

## PERFORMANCE CURVE / *CURVAS DEFUNCIONAMIENTOI*

50 Hz n=29001/min

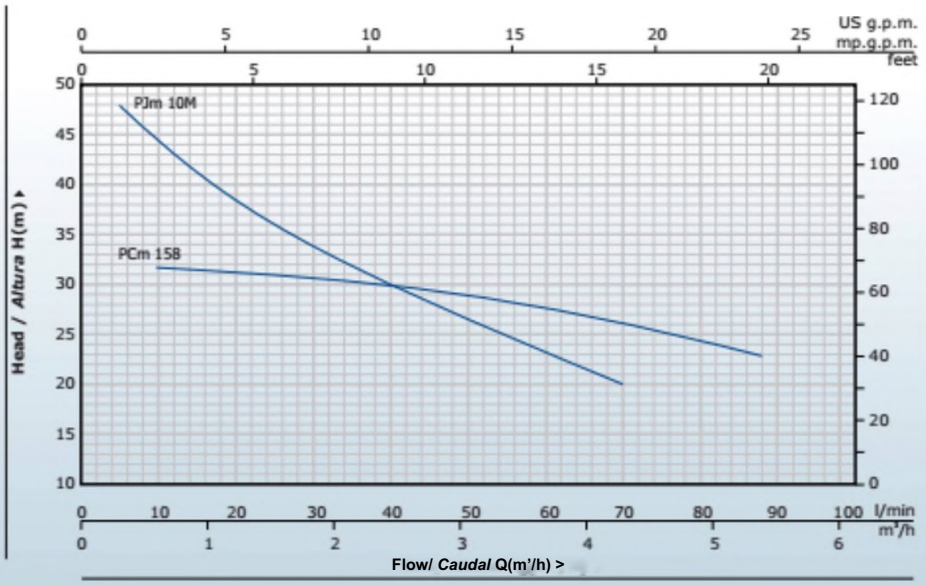


## DIMENSIONS AND WEIGHT / *DIMENSIONES YPESOS*

| MODEL *MODELO* | DN (Inch) | N.W (kg) | LxWxH (cm) |
|---|---|---|---|
| PCm 158 | 1"x1" | 11.0 | 29x19x24 |
| PJm 10M | 1"x1" | 13.5 | 39x18x20 |

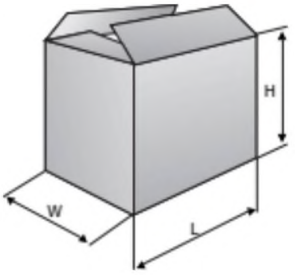

# Product Specification (60HZ)


**NEW/NUEVO**

## TECHNICAL DESCRIPTION

-New self-priming centrifugal pump
-Original design by PURITY (patented)
■ Both square motor & round motor available
-YE3 high efficient motor, with protection IP55 class F
-Pump case with anti-corrosive coating
■Impeller in stainless steel AISI 304 or cast iron
■ Shaft in stainless steel AISI 304 or galvanized iron
■ Suction and discharge port in G20 thread
• Quality NSK bearing, wear resistance mechanical seal

## APPLICATIONS

■ Suitable for use with liquids that are not chemically aggressive towards the materials from which the pump is made.
• These pumps are recommended for use in irrigation pumps,cooling systems,air conditioning systens,water supply systems,liquids transfer, pressure systems,

## USING LIMITS

■ Liquid temperature between -10°C and +120°C
■ Ambient temperature up to +50°C
■ Max. working pressure 10 bar
■ Continuous service S1

## TECHNICAL DATA / *DATOS itCNICOS*

60 HZ n=3500 1/min

| MODEL *MODELO* | Power *Potend a* | | l/mln | Q«DELIVERY / *CAUDAL* | | | | | | | | | | | DN |
|---|---|---|---|---|---|---|---|---|---|---|---|---|---|---|---|
| | | | | 0 | 5 | 10 | 20 | 30 | 40 | 50 | 60 | 70 | 80 | 90 | |
| | kw | hp | nr^/h | 0 | &3 | 0.6 | 1.2 | 1.8 | 2.4 | 3.0 | 3.6 | 4>2 | 48 | 5.4 | mm |
| PCm 158 | 0.75 | 1 | H(m) | 33 | 33 | 33 | 325 | 32 | 3L5 | 30 | 29 | 27.5 | 26 | 24.5 | 25x25 |

## TECHNICAL DATA / *DATOS ItCNICOS*

60 HZ n=3500 1/min

| MODEL *MODELO* | Power *Potend a* | | l/mln | (^DELIVERY / *CAUDAL* | | | | | | | | | | | DN |
|---|---|---|---|---|---|---|---|---|---|---|---|---|---|---|---|
| | | | | 0 | 5 | 10 | 20 | 25 | 30 | 40 | 45 | 50 | 60 | 70 | |
| | kw | hp | m³/h | 0 | &3 | 0.6 | 1.2 | 1*5 | 1.[illegible] | 2.4 | 2.7 | 3.0 | 3.6 | 4.2 | mm |
| PJmIOM | 0.75 | 1 | H(m) | 50 | 47 | 44 | 3&5 | 36 | 34 | 29.5 | 27.5 | 26 | 225 | 20 | 25x25 |

## PERFORMANCE CURVE / *CURVAS DEFUNCIONAMIENTOI*

60 HZ n=3500 1/min

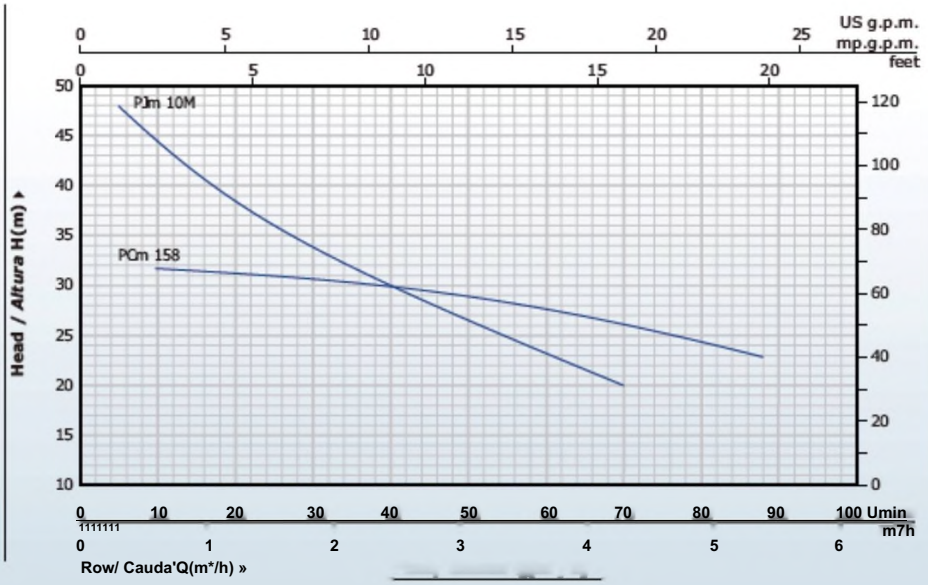


## DIMENSIONS AND WEIGHT/ *DIMENSIONES YPESOS*

| MODEL *MODELO* | DN (meh) | N.W (kg) | LxWxH (cm) |
|---|---|---|---|
| PCm 158 | i\r | 11.0 | 29x19x24 |
| PJm 10M | ivr | 13.5 | 39x18x20 |

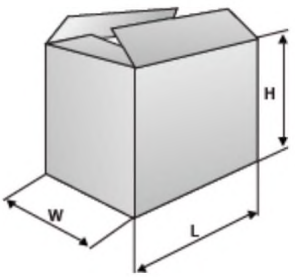

# Horizontal Water Pumps PJM

## PJM

### TECHNICAL DESCRIPTION

- New self-priming centrifugal pump
- Original design by PURITY (patented)
- Both square motor & round motor available
- YE3 high efficient motor, with protection IP55 class F
- Pump case with anti-corrosive coating
- Impeller in stainless steel AISI 304 or cast iron
- Shaft in stainless steel AISI 304 or galvanized iron
- Suction and discharge port in G20 thread
- Quality NSK bearing, wear resistance mechanical seal

# Product Specification (50HZ)


**NEW/NUEVO**

TECHNICAL DESCRIPTION

-New self-priming centrifugal pump
-Original design by PURITY (patented)
■ Both square motor & round motor available
-YE3 high efficient motor, with protection IP55 class F
-Pump case with anti-corrosive coating
■Impeller in stainless steel AISI 304 or cast iron
■ Shaft in stainless steel AISI 304 or galvanized iron
■ Suction and discharge port in G20 thread
• Quality NSK bearing, wear resistance mechanical seal

USING LIMITS

■ Liquid temperature between -10°C and +120°C
■ Ambient temperature up to +50°C
■ Max. working pressure 10 bar
■ Continuous service S1

APPLICATIONS

■ Suitable for use with liquids that are not chemically aggressive towards the materials from which the pump is made.
• These pumps are recommended for use in irrigation pumps,cooling systems,air conditioning systens,water supply systems,liquids transfer, pressure systems,

Clean Home Civil

## PCm

**Centrifugal pump**

***Bomba centrifuga***

## PJm

**Self-priming JET pump**

***Bomba autocebanteJET***

### TECHNICAL DATA / *DATOS T^CNfCOS*

50 Hz n=2900 1/min

| MODEL *MODELO* | Power *Potencia* | | k/min | Q«DELIVERY / *CAUDAL* | | | | | | | | | | | DN |
|---|---|---|---|---|---|---|---|---|---|---|---|---|---|---|---|
| | | | | 0 | 5 | 10 | 20 | 30 | 40 | 50 | 60 | 70 | 80 | 90 | |
| | kw | hp | m³/h | 0 | 0.3 | 0.6 | 1.2 | 1.8 | 2.4 | 3.0 | 3.6 | 4.2 | 4.8 | S.4 | mm |
| PCm 1S8 | 0.75 | 1 | H(m) | 33 | 33 | 33 | 32.5 | 32 | 3L5 | 30 | 29 | 27.5 | 26 | 24.5 | 2Sx25 |

### TECHNICAL DATA / *DATOS TtCNICOS*

50 Hz n=29001/min

| MODEL *MODELO* | Power *Potency* | | Vmin | Q«DELIVERY / *CAUDAL* | | | | | | | | | | | DN |
|---|---|---|---|---|---|---|---|---|---|---|---|---|---|---|---|
| | | | | 0 | 5 | 10 | 20 | 25 | 30 | 40 | 45 | 50 | 60 | 70 | |
| | kw | hp | m³/h | 0 | 0.3 | 0.6 | U | 13 | 1.8 | 2.4 | 2.7 | 3.0 | 3.6 | 4.2 | mm |
| PJm 10M | 0.75 | 1 | H(m) | 50 | 47 | 44 | 38.5 | 36 | 14 | 29.S | 27.S | 26 | 225 | 20 | 2Sx25 |

### PERFORMANCE CURVE / *CURVAS DEFUNCIONAMIENTOI*

50 Hz n=29001/min

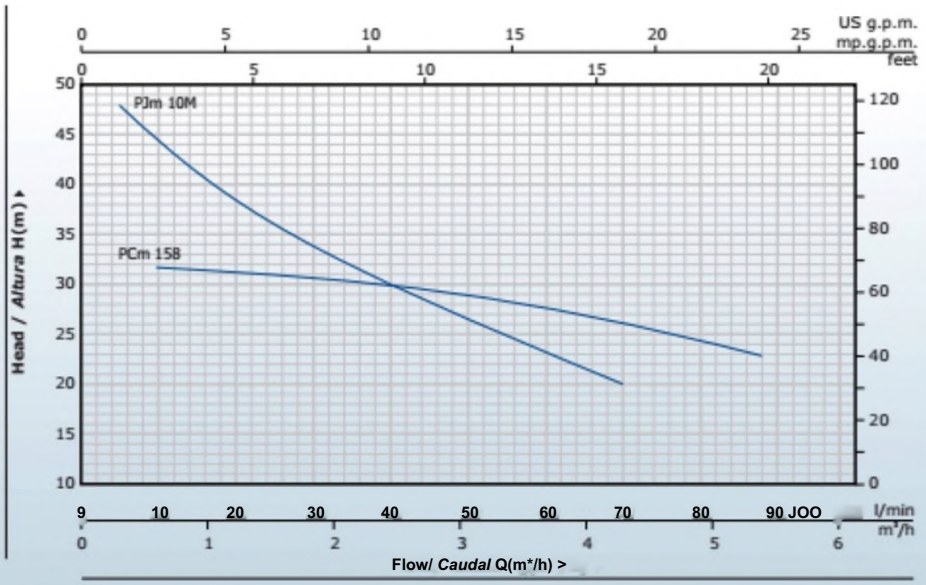

## DIMENSIONS AND WEIGHT / *DIMENSIONES YPESOS*

| MODEL<br>*MODELO* | DN<br>(Inch) | N.W<br>(kg) | LxWxH<br>(cm) |
|---|---|---|---|
| PCm158 | i"xr | 11.0 | 29x19x24 |
| PJm 10M | 1"x1" | 13.5 | 39x18x20 |

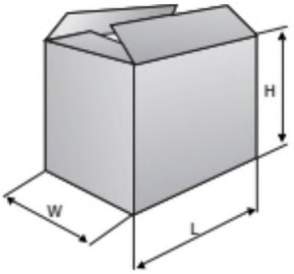

# Product Specification (60HZ)


**NEW/NUEVO**

## TECHNICAL DESCRIPTION

-New self-priming centrifugal pump
-Original design by PURITY (patented)
■ Both square motor & round motor available
-YE3 high efficient motor, with protection IP55 class F
-Pump case with anti-corrosive coating
■Impeller in stainless steel AISI 304 or cast iron
■ Shaft in stainless steel AISI 304 or galvanized iron
■ Suction and discharge port in G20 thread
• Quality NSK bearing, wear resistance mechanical seal

## USING LIMITS

■ Liquid temperature between -10°C and +120°C
■ Ambient temperature up to +50°C
■ Max. working pressure 10 bar
■ Continuous service S1

## APPLICATIONS

■ Suitable for use with liquids that are not chemically aggressive towards the materials from which the pump is made.
• These pumps are recommended for use in irrigation pumps,cooling systems,air conditioning systens,water supply systems,liquids transfer, pressure systems,

## TECHNICAL DATA / *DATOS itCNICOS*

60 HZ n=3500 1/min

| MODEL *MODELO* | Power *Potend a* | | l/mln | Q«DELIVERY / *CAUDAL* | | | | | | | | | | | DN |
|---|---|---|---|---|---|---|---|---|---|---|---|---|---|---|---|
| | | | | 0 | 5 | 10 | 20 | 30 | 40 | 50 | 60 | 70 | 80 | 90 | |
| | kw | hp | nr^/h | 0 | &3 | 0.6 | 1.2 | 1.8 | 2.4 | 3.0 | 3.6 | 4>2 | 48 | 5.4 | mm |
| PCm 158 | 0.75 | 1 | H(m) | 33 | 33 | 33 | 325 | 32 | 3L5 | 30 | 29 | 27.5 | 26 | 24.5 | 25x25 |

## TECHNICAL DATA / *DATOS ItCNICOS*

60 HZ n=3500 1/min

| MODEL *MODELO* | Power *Potend a* | | l/mln | (^DELIVERY / *CAUDAL* | | | | | | | | | | | DN |
|---|---|---|---|---|---|---|---|---|---|---|---|---|---|---|---|
| | | | | 0 | 5 | 10 | 20 | 25 | 30 | 40 | 45 | 50 | 60 | 70 | |
| | kw | hp | m³/h | 0 | &3 | 0.6 | 1.2 | 1*5 | 1.[illegible] | 2.4 | 2.7 | 3.0 | 3.6 | 4.2 | mm |
| PJmIOM | 0.75 | 1 | H(m) | 50 | 47 | 44 | 3&5 | 36 | 34 | 29.5 | 27.5 | 26 | 225 | 20 | 25x25 |

## PERFORMANCE CURVE / *CURVAS DEFUNCIONAMIENTOI*

60 HZ n=3500 1/min

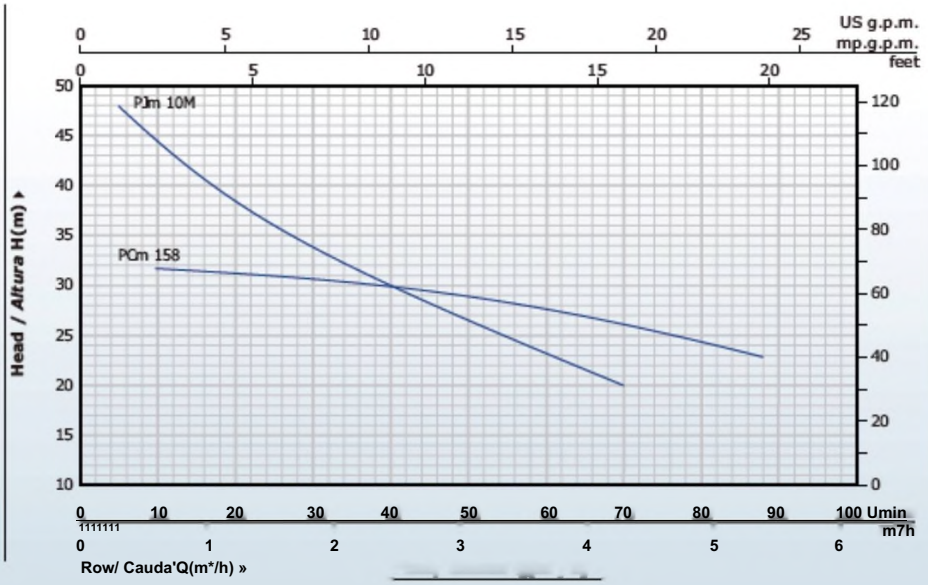


## DIMENSIONS AND WEIGHT/ *DIMENSIONES YPESOS*

| MODEL *MODELO* | DN (meh) | N.W (kg) | LxWxH (cm) |
|---|---|---|---|
| PCm 158 | i\r | 11.0 | 29x19x24 |
| PJm 10M | ivr | 13.5 | 39x18x20 |

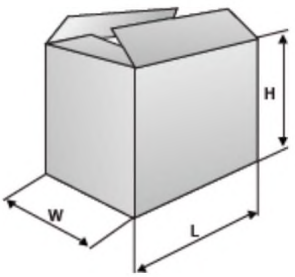

# Horizontal Water Pumps PS

## PS

### TECHNICAL DESCRIPTION

-New pump design for fire fighting

- Original design by PURITY (patented)
- Both square motor & round motor available

-YE3 high efficient motor, with protection IP55 class F

- Pump case with anti-corrosive coating
- Impeller in stainless steel AISI 304 or brass
- Shaft in stainless steel AISI 304
- Galvanized counter flange with bolts, nuts and gaskets
- Quality NSK bearing, wear resistance mechanical seal

-Models for capacities from 80-5000 US GPM

## Product Specification (50HZ)


NEW/NUEVO

### TECHNICAL DESCRIPTION

■ New EN733 standard centrifugal pump
-Original design by PURITY (patented)
■ Both square motor & round motor available
-YE3 high efficient motor, with protection IP55 class F
-Pump case with anti-corrosive coating
■Impeller in stainless steel AISI 304 or cast iron
■ Shaft in stainless steel AISI 304 or galvanized iron
■ Galvanized counter flange with bolts, nuts and gaskets
• Quality NSK bearing, wear resistance mechanical seal

### APPLICATIONS

■ Suitable for use with clean water and liquids that are not chemically
■ aggressive towards the materials from which the pump is made.
■ The EN733 centrifugal pumps are recommended for use in water supply,
■ cleaning sets, pressure boosting, firefighting sets, irrigation, industrial
■ applications, water circulation in climatisation sets, agricultural.

### USING LIMITS

■ Liquid temperature between -10°C and +120°C
■ Ambient temperature up to +50°C
■ Max. working pressure 16 bar
■ Continuous service S1

### PATENTS

-Registered model PST
-Registered Patent Design n 201530478502.0

## STANDARD IMPELLER MATERIAL]

| DISCHARGE SIZE *DE DESCARGA* | IMPELLER SIZE *DEL IMPULSOR* | | | | | | |
|---|---|---|---|---|---|---|---|
| | 125 | 160 | 200 | 250 | 250D | 315 | 400 |
| 32 | SS304 | SS304 | SS304 | Cast iron | SS304 | | |
| 40 | Cast iron | Cast iron | SS304 | Cast iron | / | | |
| 50 | Cast iron | Cast iron | Cast iron | Cast iron | / | | |
| 65 | Cast iron | Cast iron | Cast iron | Cast iron | / | Cast iron | |
| 80 | Cast iron | Cast iron | Cast iron | Cast iron | / | Cast iron | Cast iron |
| 100 | | Cast iron | Cast iron | Cast iron | / | Cast iron | Cast iron |
| 125 | | | Cast iron | Cast iron | / | Cast iron | Cast iron |
| 150 | | | Cast iron | Cast iron | / | Cast iron | Cast iron |
| 200 | | | | Cast iron | / | Cast iron | Cast iron |
| 250 | | | | | / | Cast iron | Cast iron |

TECHICAL DATA/DATOS TECNICOS

50 HZ n=2900 1/min

| MODEL MODELO | Powe r Potencia | | us gpm | Q= DELIVERY / CAUDAL | | | | | | | | | | | | | | | | | | | DN |
|---|---|---|---|---|---|---|---|---|---|---|---|---|---|---|---|---|---|---|---|---|---|---|---|
| | | | | 0 | 26 | 40 | 66 | 79 | 106 | 119 | 159 | 185 | 211 | 238 | 317 | 370 | 396 | 476 | 529 | 608 | 793 | 925 | |
| | | | l/min | 0 | 100 | 150 | 250 | 300 | 400 | 450 | 600 | 700 | 800 | 900 | 1200 | 1400 | 1500 | 1800 | 2000 | 2300 | 3000 | 3500 | |
| | kw | hp | m³/h | 0 | 6 | 9 | 15 | 18 | 24 | 27 | 36 | 42 | 48 | 54 | 72 | 84 | 90 | 108 | 120 | 138 | 180 | 210 | mm |
| 32-125/07 | 0.75 | 1 | | 17.5 | 16.7 | 15 | 12 | 9 | | | | | | | | | | | | | | | 50x32 |
| 32-125/11 | 1.1 | 1.5 | | 22 | 21 | 19.7 | 16.5 | 14.5 | 9 | | | | | | | | | | | | | | 50x32 |
| 32-160/15 | 1.5 | 2 | | 25.4 | 23.7 | 22.5 | 18.5 | 15.8 | | | | | | | | | | | | | | | 50x32 |
| 32-160/22 | 2.2 | 3 | | 31 | 29.6 | 28.5 | 24.5 | 22 | 15 | | | | | | | | | | | | | | 50x32 |
| 32-160/30 | 3 | 4 | | 35 | 34.3 | 34 | 28 | 25.5 | 19 | 15 | | | | | | | | | | | | | 50x32 |
| 32-200/30 | 3 | 4 | | 44.2 | 43 | 39.8 | 35.2 | 32.2 | 24.6 | 19.8 | | | | | | | | | | | | | 50x32 |
| 32-200/40 | 4 | 5.5 | | 54.5 | 52 | 50 | 45.5 | 41.9 | 35 | 30.3 | | | | | | | | | | | | | 50x32 |
| 32-250/55 | 5.5 | 7.5 | | 60 | 59.5 | 59 | 55 | 51 | 34.5 | | | | | | | | | | | | | | 50x32 |
| 32-250/75 | 7.5 | 10 | | 69.5 | 69 | 68.5 | 66 | 63 | 53 | | | | | | | | | | | | | | 50x32 |
| 32-250/110 | 11 | 15 | | 90 | 89.5 | 89 | 82 | 79 | 66 | | | | | | | | | | | | | | 50x32 |
| 32-250/55D | 5.5 | 7.5 | | 79.5 | 74.7 | 71.8 | 63 | 56 | 37.5 | | | | | | | | | | | | | | 50x32 |
| 32-250/75D | 7.5 | 10 | | 95 | 93 | 91 | 83 | 76 | 57.8 | | | | | | | | | | | | | | 50x32 |
| 40-125/11 | 1.1 | 1.5 | | 14.7 | | | | 13.5 | 11.5 | 10.1 | 5.8 | | | | | | | | | | | | 65x40 |
| 40-125/15 | 1.5 | 2 | | 18.1 | | | | 17 | 15 | 13.9 | 9.6 | 6 | | | | | | | | | | | 65x40 |
| 40-125/22 | 2.2 | 3 | | 24.5 | | | | 23.2 | 21.5 | 202 | 16 | 13 | 83 | | | | | | | | | | 65x40 |
| 40-160/30 | 3 | 4 | | 31.8 | | | | 29.5 | 27.5 | 26.3 | 21.5 | 17.5 | | | | | | | | | | | 65x40 |
| 40-160/40 | 4 | 55 | | 38 | | | | 36 | 34 | 33 | 28.5 | 25 | 20.1 | | | | | | | | | | 65x40 |
| 40-200/55 | 5.5 | 7.5 | | 46 | | | | 43.8 | 41.3 | 40.1 | 35 | 30 | | | | | | | | | | | 65x40 |
| 40-200/75 | 7.5 | 10 | | 57 | | | | 53.6 | 51.5 | 50 | 45 | 41 | 36.5 | | | | | | | | | | 65x40 |
| 40-250/92 | 9.2 | 12.5 | | 64 | | | | 59 | 56.5 | 55 | 49.5 | 45 | 39.8 | | | | | | | | | | 65x40 |
| 40-250/110 | 11 | 15 | | 72 | | | | 67.5 | 66 | 63.5 | 57.5 | 52.2 | 47 | | | | | | | | | | 65x40 |
| 40-250/150 | 15 | 20 | | 84.5 | | | | 80 | 77.3 | 75.2 | 71 | 65 | 61 | | | | | | | | | | 65x40 |
| 50-125/22 | 2.2 | 3 | | 17 | | | | | | | 15.4 | 14 | 12.8 | 11.5 | 6.5 | | | | | | | | 65x50 |
| 50-125/30 | 3 | 4 | | 20 | | | | | | | 18.8 | 18 | 17 | 15.6 | 11 | | | | | | | | 65x50 |
| 50-125/40 | 4 | 5.5 | | 24 | | | | | | | 23.1 | 23 | 21.5 | 203 | 15.8 | 11.8 | | | | | | | 65x50 |
| 50-160/55 | 5.5 | 7.5 | H(m) | 32 | | | | | | | 30.6 | 30 | 28 | 26.6 | 20.5 | 14.8 | | | | | | | 65x50 |
| 50-160/75 | 7.5 | 10 | | 40 | | | | | | | 38 | 37 | 36 | 34.4 | 29 | 24 | 21 | | | | | | 65x50 |
| 50-200/92 | 9.2 | 12.5 | | 50.5 | | | | | | | 46.8 | 45 | 43 | 40.9 | 32.5 | 26.7 | | | | | | | 65x50 |
| 50-200/110 | 11 | 15 | | 57.5 | | | | | | | 53.5 | 52 | 50 | 47.5 | 40 | 34 | 29 | | | | | | 65x50 |
| 50-200/150 | 15 | 20 | | 62 | | | | | | | 58 | 56.5 | 54.5 | 52 | 44.5 | 39 | 35.5 | | | | | | 65x50 |
| 50-250/150 | 15 | 20 | | 68.5 | | | | | | | 64 | 63 | 61.5 | 59 | 50 | 41 | | | | | | | 65x50 |
| 50-250/185 | 18.5 | 25 | | 79 | | | | | | | 75.8 | 74.8 | 74 | 71.5 | 63.5 | 55.5 | 47 | | | | | | 65x50 |
| 50-250/220 | 22 | 30 | | 89.5 | | | | | | | 86 | 85.3 | 84 | 81.5 | 73.5 | 65.5 | 57 | | | | | | 65x50 |
| 65-125/40 | 4 | 5.5 | | 19 | | | | | | | | | 17.3 | 16.8 | 14.5 | 13 | 11.8 | | | | | | 80x65 |
| 65-125/55 | 5.5 | 7.S | | 23 | | | | | | | | | 21.3 | 20.9 | 19 | 17.5 | 16.7 | 13.7 | | | | | 80x65 |
| 65-125/75 | 7.5 | 10 | | 27 | | | | | | | | | 26 | 25.6 | 24.5 | 23 | 22.5 | 20 | 18 | | | | 80x65 |
| 65-160/92 | 9.2 | 12.5 | | 33 | | | | | | | | | | 31.5 | 30 | 28 | 27.1 | 24 | 21.5 | | | | 80x65 |
| 65-160/110 | 11 | 15 | | 36 | | | | | | | | | | 34.5 | 33 | 31.5 | 30.8 | 28 | 25.S | | | | 80x65 |
| 65-160/150 | 15 | 20 | | 42 | | | | | | | | | | 41 | 40 | 38.5 | 37.8 | 35 | 33 | 29.5 | | | 80x65 |
| 65-200/150 | 15 | 20 | | 45 | | | | | | | | | | 45.5 | 43 | 41 | 40.2 | 36.5 | 34 | | | | 80x65 |
| 65-200/185 | 18.5 | 25 | | 52 | | | | | | | | | | 523 | 51 | 49 | 48.2 | 44.5 | 42 | | | | 80x65 |

## STANDARD IMPELLER MATERIA!^

| DISCHARGE SIZE *DE DESCARGA* | IMPELLER SIZE *DEL IMPULSE* | | | | | | |
|---|---|---|---|---|---|---|---|
| | 125 | 160 | 200 | 250 | 250D | 315 | 400 |
| 32 | SS304 | SS304 | SS304 | Cast iron | SS304 | | |
| 40 | Cast iron | Cast iron | SS304 | Cast iron | / | | |
| 50 | Cast iron | Cast iron | Cast iron | Cast iron | / | | |
| 65 | Cast iron | Cast iron | Cast iron | Cast iron | / | Cast iron | |
| 80 | Cast iron | Cast iron | Cast iron | Cast iron | / | Cast iron | Cast iron |
| 100 | | Cast iron | Cast iron | Cast iron | / | Cast iron | Cast iron |
| 125 | | | Cast iron | Cast iron | / | Cast iron | Cast iron |
| 150 | | | Cast iron | Cast iron | / | Cast iron | Cast iron |
| 200 | | | | Cast iron | / | Cast iron | Cast iron |
| 250 | | | | | / | Cast iron | Cast iron |

| | | | | | | | | | | | | | | | | | | | | | | |
|---|---|---|---|---|---|---|---|---|---|---|---|---|---|---|---|---|---|---|---|---|---|---|
| **65-200/220** | 22 | 30 | | 59 | | | | | | | | | | 59.5 | 58 | 56 | 55 | 52 | 49.5 | 44.5 | | | 80x65 |
| **65-250/220** | 22 | 30 | | 64.8 | | | | | | | | | | 64.7 | 62 | 60 | 58.5 | 53 | 50 | | | | 80x65 |
| **65-250/300** | 30 | 40 | | 80 | | | | | | | | | | 79.8 | 77.5 | 75.5 | 74.5 | 70 | 66 | 58 | | | 80x65 |
| **65-250/370** | 37 | 50 | | 92 | | | | | | | | | | 90.5 | 88.5 | 87 | 85 | 80.5 | 78 | 68 | | | 80x65 |
| **65-315/370** | 37 | 50 | | 102 | | | | | | | | | | 99.2 | 97 | 95 | 94.5 | 92.4 | 90 | 83 | | | 80x65 |
| **65-315/450** | 45 | 60 | | 112 | | | | | | | | | | 109.2 | 107.7 | 105.8 | 104.5 | 102.5 | 100 | 93 | 66 | | 80x65 |
| **65-315/550** | 55 | 75 | | 122 | | | | | | | | | | 119.2 | 117.4 | 115.7 | 114.5 | 112.5 | 110 | 103 | 76 | | 80x65 |
| **65-315/750** | 75 | 100 | | 141 | | | | | | | | | | 139.8 | 137.3 | 135.6 | 134.5 | 132.5 | 130 | 122 | 96 | 65.5 | 80x65 |
| **80-125/40** | 4 | 5.5 | | 17 | | | | | | | | | 16.5 | 15.9 | 14.3 | 13.5 | 11.6 | 10 | 7.5 | | | | 100x80 |
| **80-125/55** | 5.5 | 7.5 | | 21 | | | | | | | | | 20.5 | 20 | 19 | 18 | 16.5 | 15 | 12.5 | 9.5 | | | 100x80 |
| **80-125/75** | 7.5 | 10 | | 26 | | | | | | | | | 25 | 25 | 24.5 | 23.8 | 22.5 | 21.5 | 19.5 | 16.5 | | | 100x80 |

TECHICAL DATA/DATOS TECNICOS 50 HZ n=2900 1/min

| MODEL *MODELO* | Power *Potcncid* | | US gpm | Q=DELIVERY/ *CAUDAL* | | | | | | | | | | | | | | | | | | DN |
|---|---|---|---|---|---|---|---|---|---|---|---|---|---|---|---|---|---|---|---|---|---|---|
| | | | | 0 | 264 | 396 | 529 | 634 | 793 | 881 | 925 | 969 | 1057 | 1233 | 1322 | 1586 | 1762 | 2203 | 2643 | 3524 | 4405 | |
| | | | l/min | 0 | 1000 | 1500 | 2000 | 2400 | 3000 | 3333 | 3500 | 3666 | 4000 | 4666 | 5000 | 6000 | 6666 | 8333 | 10000 | 13333 | 16666 | |
| | kw | hp | m³/h | 0 | 60 | 90 | 120 | 144 | 180 | 200 | 210 | 220 | 240 | 280 | 300 | 360 | 400 | 500 | 600 | 800 | 1000 | mm |
| **80-160/110** | 11 | 15 | | 27 | 27 | 27.3 | 24.5 | 21.1 | 16 | | | | | | | | | | | | | 100x80 |
| **80-160/150** | 15 | 20 | | 32.8 | 32.6 | 32.5 | 30.2 | 27 | 22.1 | 18.5 | 16.7 | | | | | | | | | | | 100x80 |
| **80-160/185** | 18.5 | 25 | | 39 | 38.5 | 38 | 36.7 | 33.6 | 28.8 | 25.3 | 23.5 | | | | | | | | | | | 100x80 |
| **80-160/220** | 22 | 30 | | 44 | 43.5 | 43 | 41.7 | 38.6 | 33.8 | 30.3 | 28.5 | | | | | | | | | | | 100x80 |
| **80-200/220** | 22 | 30 | | 48 | 47.7 | 47.5 | 43.5 | 39.2 | 32.5 | 27.2 | 24.5 | | | | | | | | | | | 100x80 |
| **80-200/300** | 30 | 40 | | 60 | 59.7 | 59.5 | 57 | 53.1 | 47 | 42.7 | 40.5 | | | | | | | | | | | 100x80 |
| **80-250/370** | 37 | 50 | | 71.5 | 70.9 | 70.5 | 65.5 | 59.3 | 51 | 43.2 | 38.5 | | | | | | | | | | | 100x80 |
| **80-250/450** | 45 | 60 | | 88 | 86.7 | 86 | 83.6 | 78.5 | 70.5 | 60 | 51 | | | | | | | | | | | 100x80 |
| **80-250/550** | 55 | 75 | | 94.5 | 94.5 | 94.5 | 91.8 | 87 | 79.5 | 72.1 | 68.3 | | | | | | | | | | | 100x80 |
| **80-315/450** | 45 | 60 | | 85 | 84 | 82.6 | 82 | 78 | 68.3 | 61 | 56 | | | | | | | | | | | 100x80 |
| **80-315/550** | 55 | 75 | | 98 | 97 | 95.6 | 95 | 91 | 81.3 | 74 | 69 | | | | | | | | | | | 100x80 |
| **80-315/750** | 75 | 100 | | 124 | 123 | 121.6 | 121 | 117 | 107.3 | 100 | 95 | 90 | 80.8 | | | | | | | | | 100x80 |
| **80-315/900** | 90 | 125 | | 144 | 143 | 141.6 | 141 | 137 | 127.3 | 120 | 115 | 110 | 100.8 | | | | | | | | | 100x80 |
| **100-160/150** | 15 | 20 | | 35 | 33.5 | 32.5 | 30 | 27.8 | 24.5 | 21.5 | 20 | 18.3 | 15 | | | | | | | | | 125x100 |
| **100-160/185** | 18.5 | 25 | | 38.5 | 37.5 | 36.5 | 34.3 | 32.2 | 29 | 25.7 | 24 | 22 | 18 | | | | | | | | | 125x100 |
| **100-160/220** | 22 | 30 | | 43 | 41 | 40 | 37.6 | 35.2 | 31.5 | 28.5 | 27 | 25.3 | 22 | | | | | | | | | 125x100 |
| **100-200/220** | 22 | 30 | | 38.5 | 36.7 | 35.7 | 33.8 | 31.7 | 28.5 | 26.8 | 26 | 25 | 22.9 | 16.3 | 13 | | | | | | | 125x100 |
| **100-200/300** | 30 | 40 | | 44.5 | 42.5 | 42 | 40.2 | 38.8 | 36.7 | 34.2 | 33 | 31.7 | 29 | 21.7 | 18 | | | | | | | 125x100 |
| **100-200/370** | 37 | 50 | | 55 | 53 | 51 | 50.6 | 49.2 | 47 | 45 | 44 | 42.8 | 40.5 | 32.8 | 29 | | | | | | | 125x100 |
| **100-250/450** | 45 | 60 | | 65 | 65 | 64 | 63 | 61 | 58 | 56 | 55 | 53.3 | 50 | 39 | 33.5 | | | | | | | 125x100 |
| **100-250/550** | 55 | 75 | | 77 | 76 | 75.5 | 75 | 73.8 | 72 | 71.7 | 71.5 | 70.7 | 69 | 62.3 | 59 | | | | | | | 125x100 |
| **100-250/750** | 75 | 100 | | 91 | 91 | 90.5 | 89.7 | 88 | 85.5 | 84 | 83.3 | 81.5 | 78 | 71.7 | 68.5 | 48 | | | | | | 125x100 |
| **100-315/550** | 55 | 75 | | 80 | | | 79 | 77.4 | 75 | 74 | 73.5 | 73 | 71.3 | 68 | 66 | 60 | | | | | | 125x100 |
| **100-315/750** | 75 | 100 | | 100 | | | 99 | 97.4 | 95 | 94 | 93.5 | 93 | 91.3 | 88 | 86 | 80 | | | | | | 125x100 |
| **100-315/900** | 90 | 125 | | 118 | | | 116.5 | 114.7 | 112 | 111 | 110.8 | 110.5 | 108.7 | 106 | 104 | 98 | | | | | | 125x100 |
| **100-315/1100** | 110 | 150 | | 138 | | | 136.5 | 134.7 | 132 | 131 | 130.8 | 130.5 | 128.7 | 126 | 124 | 118 | | | | | | 125x100 |

| | | | | | | | | | | | | | | | | | | | | | | |
|---|---|---|---|---|---|---|---|---|---|---|---|---|---|---|---|---|---|---|---|---|---|---|
| **125-200/450** | 45 | 60 | **H(m)** | 39.8 | | | 39.3 | 39.2 | 39 | 38.9 | 38.9 | 38.8 | 37.5 | 35 | 34 | 28.6 | 25 | | | | | 150x125 |
| **125-200/550** | 55 | 75 | | 49.8 | | | 49.3 | 49.2 | 49 | 48.9 | 48.9 | 48.8 | 47.5 | 45 | 44 | 38.6 | 35 | | | | | 150x125 |
| **125-200/750** | 75 | 100 | | 60.8 | | | 60.3 | 60.2 | 60 | 59.9 | 59.9 | 59.8 | 58.5 | 56 | 55 | 49.6 | 46 | | | | | 150x125 |
| **125-250/550** | 55 | 75 | | 70 | | | 67 | 65 | 64 | 63 | 62 | 61 | 59.5 | 57 | 56 | 53 | | | | | | 150x125 |
| **125-250/750** | 75 | 100 | | 80 | | | 77 | 75 | 74 | 73 | 72 | 71 | 69.8 | 67.1 | 66.2 | 63 | 58.5 | | | | | 150x125 |
| **125-250/900** | 90 | 125 | | 87 | | | 84 | 82 | 81 | 80 | 79 | 78 | 77 | 74.5 | 73.5 | 70.2 | 65.7 | | | | | 150x125 |
| **125-250/1100** | 110 | 150 | | 97 | | | 94 | 92 | 91 | 90 | 89 | 88 | 87 | 84.6 | 83.9 | 80.4 | 76 | | | | | 150x125 |
| **125-315/900** | 90 | 125 | | 89 | | | | | | 87 | 86 | 85 | 83.7 | 81.5 | 81 | 77 | 74 | 61 | | | | 150x125 |
| **125-315/1100** | 110 | 150 | | 103 | | | | | | 101 | 100 | 99 | 97.8 | 95.5 | 95 | 91.5 | 88.2 | 75.6 | | | | 150x125 |
| **125-315/1320** | 132 | 180 | | 118 | | | | | | 116 | 115 | 114 | 112.5 | 110.5 | 110.3 | 106.5 | 103.2 | 91 | | | | 150x125 |
| **125-315/1600** | 160 | 220 | | 138 | | | | | | 136.8 | 135.9 | 135 | 133.7 | 131.5 | 131 | 127.5 | 124.2 | 112 | | | | 150x125 |
| **150-200/750** | 75 | 100 | | 50 | | | | | | | | 48 | 47.9 | 47.6 | 47.2 | 46.7 | 46.4 | 40.6 | 36.8 | 25.2 | | 200x150 |
| **150-200/900** | 90 | 125 | | 56 | | | | | | | | 54 | 53.9 | 53.6 | 53.2 | 52.7 | 52.4 | 48 | 42.8 | 31.2 | | 200x150 |
| **150-200/1100** | 110 | 150 | | 65.2 | | | | | | | | 62 | 61.7 | 61.2 | 60.8 | 59.8 | 59.2 | 57.2 | 54 | 46 | | 200x150 |
| **150-250/1100** | 110 | 150 | | 67 | | | | | | | | | | | 64.2 | 62 | 60.6 | 55.8 | 49.8 | 33.8 | | 200x150 |
| **150-250/1320** | 132 | 180 | | 80.2 | | | | | | | | | | | 78.2 | 76.3 | 75 | 70.6 | 65 | 50.2 | 29.8 | 200x150 |
| **150-250/1600** | 160 | 220 | | 90 | | | | | | | | | | | 88.4 | 87 | 86 | 82 | 77.2 | 62.4 | 42 | 200x150 |
| **150-315/1600** | 160 | 220 | | 92 | | | | | | | | | | | 90 | 88.3 | 87.2 | 82.8 | 76.8 | 60.4 | | 200x150 |
| **150-315/2000** | 200 | 270 | | 111 | | | | | | | | | | | 110.6 | 108.7 | 107.4 | 103.4 | 98.2 | 83.4 | 62.2 | 200x150 |
| **150-315/2500** | 250 | 340 | | 135 | | | | | | | | | | | 135.4 | 133.7 | 132.6 | 128.6 | 123.8 | 110.2 | 91 | 200x150 |

## MATERIAL DESCRIPTION / *DESCRIPCfONJÉ MATERIAL*

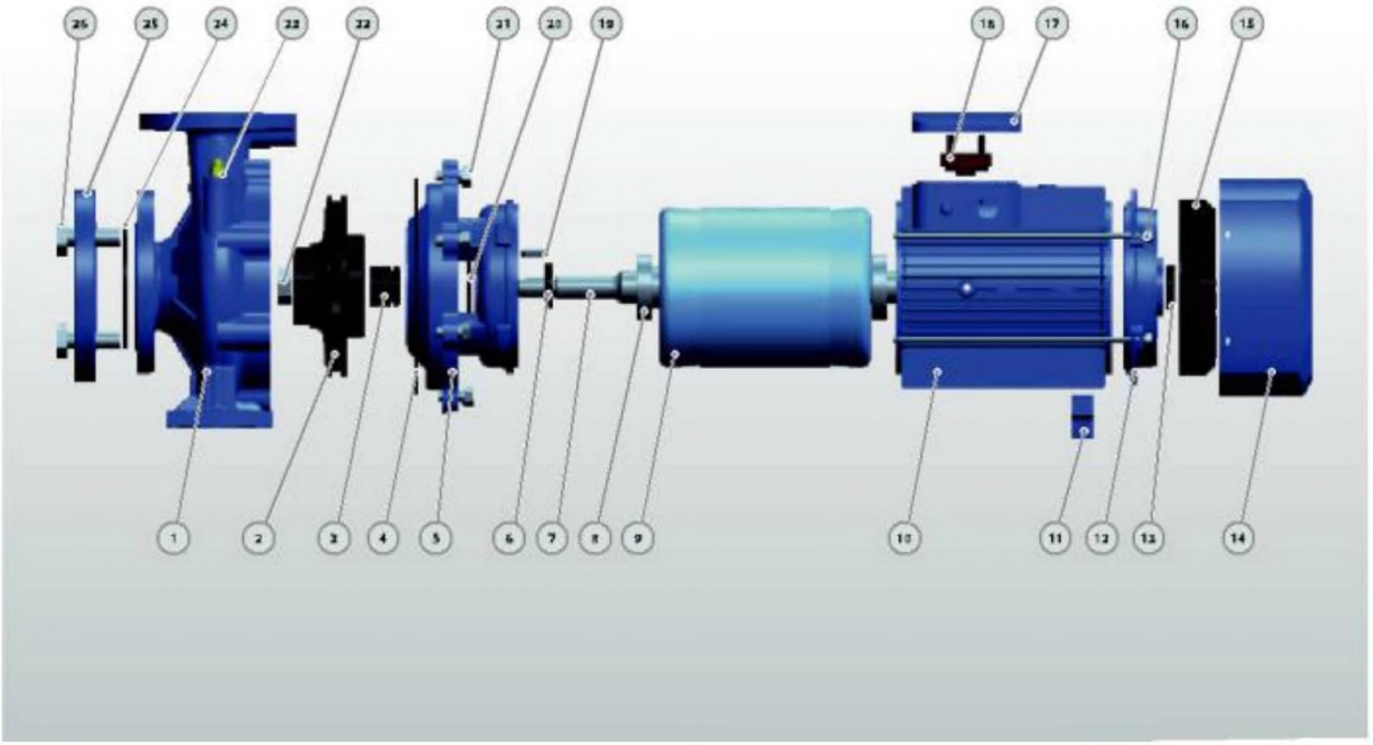

| No. | Description<br>*Descripción* | Material<br>*Material* | No. | Description<br>*Descripción* | Material<br>*Material* | No. | Description<br>*Descripción* | Material<br>*Material* |
|---|---|---|---|---|---|---|---|---|
| 1 | Pump Case<br>*Cuerpo de Bomba* | Cast iron<br>*Fundición* | 10 | Motor Case<br>*Cuerpo de Motor* | Aluminum<br>*Aluminio* | 19 | Impeller Key<br>*Chaveta Impulsor* | Iron<br>*Hierro* |
| 2 | Impeller<br>*Impulsor* | SS304/Cast iron<br>*Inox 304/Fundici6n* | 11 | Support Foot<br>*Soporte Pie* | Plastic<br>*Pldstico* | 20 | Water Deflector<br>*Deflector* | Rubber<br>*Caucho* |
| 3 | Mechanical Seal<br>*Cierre Mec^nico* | SiC/Carbon/SS304<br>*SiC-Grafito-Inox304* | 12 | Back Cover<br>*Tapa Trasera* | Cast iron<br>*Fundicidn* | 21 | Connection Bolt<br>*Perno* | Steel<br>*Acero* |
| 4 | O-ring<br>*Junta Tórica* | *Rubber*<br>*Caucho* | 13 | Reinforced Seal<br>*Sello Reforzado* | Rubber<br>*Caucho* | 22 | Impeller Nut<br>*Tuerca de Impulsor* | Galvanizated Steel<br>*Acero Galvanizado* |
| 5 | Connection<br>*Conexión* | Cast iron<br>*Fundicidn* | 14 | Fan Cover<br>*Tapa Ventilador* | Aluminum<br>*Aluminio* | 23 | Release Valve<br>*Tapón Cebado* | Brass<br>*Bronce* |
| 6 | Reinforced Seal<br>*Sello Reforzado* | Rubber<br>*Caucho* | 15 | Fan<br>*Ventilador* | Plastic<br>*Plcistico* | 24 | Gasket<br>*Empague* | Rubber<br>*Caucho* |
| 7 | Shaft<br>*Eje* | SS304/45# Steel<br>*Inox 304/45# Hierro* | 16 | Through Bolt<br>*Perno* | Steel<br>*Acero* | 25 | Counter Flange<br>*Contra Brida* | Galvanizated Cast iron<br>*Fundición Galvanizado* |
| 8 | Bearing<br>*Rodamiento* | Ball Bearing<br>*Bola Rodamiento* | 17 | Terminal Box<br>*Caja de Bornas* | Aluminum<br>*Aluminio* | 26 | Flange Bolt<br>*Perno de Brida* | Steel<br>*Acero* |
| 9 | Wound Stator/Rotor<br>*Estator / Rotor* | Silicon Steel/Copper<br>*Acero al Silicio/Cobre* | 18 | *Terminal Board*<br>*Tablero de Bornas* | Plastic<br>*Pl^stico* | | | |

## MATERIAL DESCRIPTION / *DESCRIPCION DE MA TERIAL*

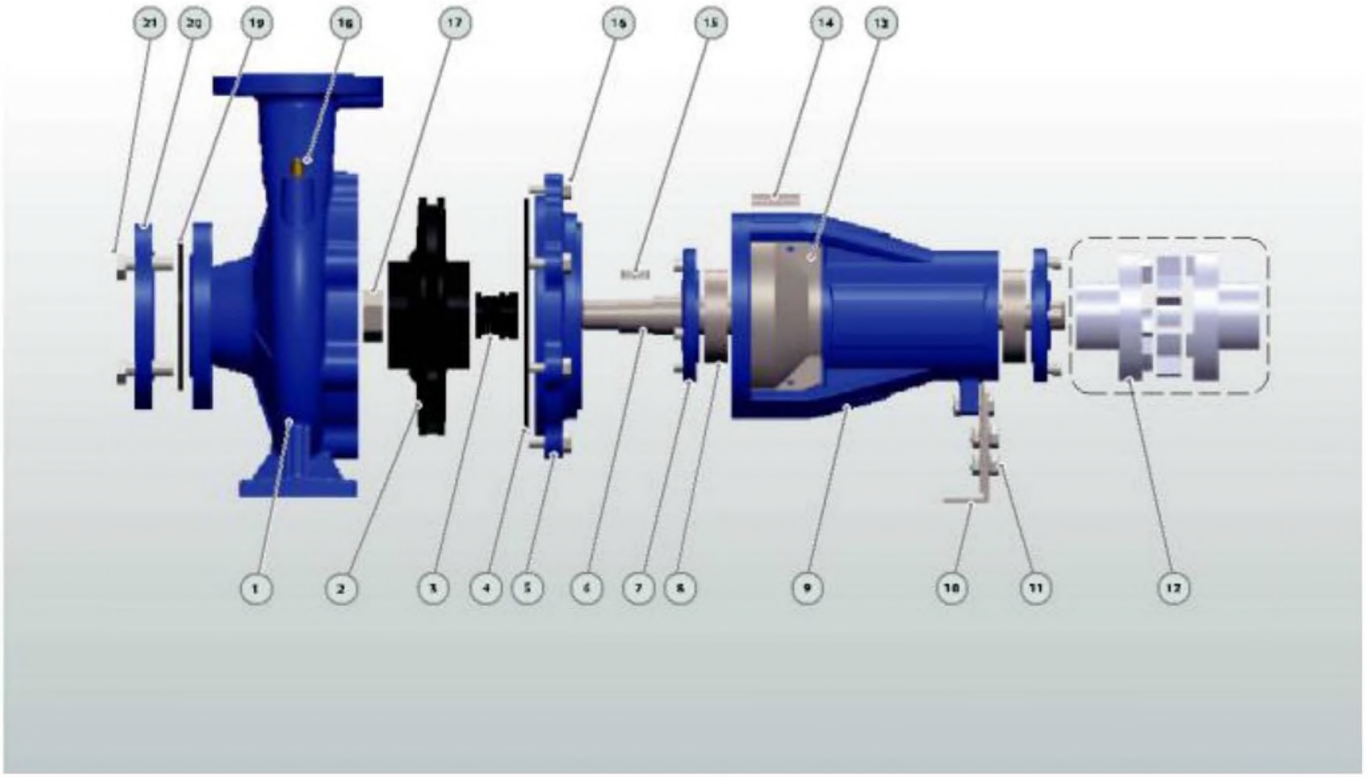

| No. | Description<br>*Descripción* | Material<br>*Material* | No. | Description<br>*Descripción* | Material<br>*Material* | No. | Description<br>*Descripción* | Material<br>*Material* |
|---|---|---|---|---|---|---|---|---|
| 1 | Pump Case<br>*Cuerpo de Bomba* | Cast iron<br>*Fundición* | 8 | Bearing<br>*Rodamiento* | Ball Bearing<br>*Bola Rodamiento* | 15 | Impeller Key<br>*Chaveta Impulsor* | Iron<br>*Hierro* |
| 2 | Impeller<br>*Impulsor* | SS304/Cast iron<br>*Inox 304/Fundición* | 9 | Support Case<br>*Cuerpo Soporte* | Cast iron<br>*Fundición* | 16 | Connection Bolt<br>*Perno* | Steel<br>*Acero* |
| 3 | Mechanical Seal<br>*Cierre Mec^nico* | SiC/Carbon/SS304<br>*SiC-Grafito-Inox304* | 10 | Support Foot<br>*Soporte Pie* | Iron<br>*Hierro* | 17 | Impeller Nut<br>*Tuerca de Impulsor* | Galvanizated Steel<br>*Acero Galvanizado* |
| 4 | O-ring<br>*Junta T6rica* | *Rubber*<br>*Caucho* | 11 | Foot Bolt<br>*Perno* | Steel<br>*Acero* | 18 | Release Valve<br>*Tap6r) Cebado* | Brass<br>*Bronce* |
| 5 | Connection<br>*Conexión* | Cast iron<br>*Fundición* | 12 | Coupling(Optional)<br>*Unión(Opcional)* | Steel<br>*Acero* | 19 | Gasket<br>*Empague* | Rubber<br>*Caucho* |
| 6 | Shaft<br>*EJe* | SS304/45# Steel<br>*Inox 304/45# Hierro* | 13 | Case Cover<br>*Tapa Cuerpo* | SS304<br>*Inox304* | 20 | Counter Flange<br>*Contra Brida* | Galvanizated Cast iron<br>*Fundición Galvanizado* |
| 7 | Bearing Cover<br>*Tapa Rodamiento* | Cast iron<br>*Fundición* | 14 | Nameplate<br>*Letrero* | Aluminum<br>*Aluminio* | 21 | Flange Bolt<br>*Perno de Brida* | Steel<br>*Acero* |

# Product Specification (60HZ)


NEW/NUEVO

## TECHNICAL DESCRIPTION

-New pump design for fire fighting
-Original design by PURITY (patented)
■ Both square motor & round motor available
-YE3 high efficient motor, with protection IP55 class F
-Pump case with anti-corrosive coating
■Impeller in stainless steel AISI 304 or brass
■ Shaft in stainless steel AISI 304
■ Galvanized counter flange with bolts, nuts and gaskets
• Quality NSK bearing, wear resistance mechanical seal
■ Models for capacities from 80-5000 US GPM

## APPLICATIONS

■ Suitable for use with clean water and liquids that are not chemically
■ aggressive towards the materials from which the pump is made.
• The fire fighting pumps specially designed for fire-fighting systems
-with rated capacities from 80-5000USGPM at rated pressure 7,8,9,10,
■11,12,13..18bar. Other sizes can provide on request.

## USING LIMITS

■ Liquid temperature L between -10°C and +120°C
■ Ambient temperature up to +50°C
■ Max. working pressure 25 bar
■ Continuous service S1

## PATENTS

-Registered model PST
-Registered Patent Design n 201530478502.0

## TECHNICAL DATA / *DATOS TiCNICOS*

n=2900/35001/min

| GPM | Bar | Pump for diesel Bomba *pan diesel* 2900rpm | Pump for electric *Bomb^ pan BMctrico* 3500rpm | Motor pump *Bomba Motor* 3500rpm |
|---|---|---|---|---|
| 80 | 7 | PS32-250/75 | PS32-200/75 | PST32-200/75 |
| 100 | 7 | PS32-25（V75 | PS32-20Q/75 | PST32-200/75 |
| 120 | 7 | PS32-250/75H | PS32-200/75H | PST32-200/75D |
| 150 | 7 | PS40-250/110 | PS40-200/110 | PST40-200/HO |
| 200 | 7 | PS4O-25O/15O | PS4O-2OO/15O | PST40-200/150 |
| 250 | 7 | PS 50-250/185 | PS50-200/185 | PST50-200/185 |
| 300 | 7 | PS 50-250/220 | PS50-200/220 | PST50-200/220 |
| 350 | 7 | PS50-250/220 | PS50-20（V220 | PST50-200/220 |
| 400 | 7 | PS65-250/300 | PS65-200/300 | PST65-200/300 |
| 500 | 7 | PS65-250/300 | PS65-200/300 | PST65-200/300 |
| 500 | 8 | PS65-250/370 | P $65-200/370 | PST65-200/370 |
| 500 | 9 | PS65-315/370 | PS65-250/370 | - |
| 500 | 10 | PS65-315/450 | PS65-250/450 | - |
| 500 | 11 | PS65-315/550 | PS65-250/550 | - |
| 500 | 12 | PS65-315/75O | PS65-250/750 | - |
| 500 | 13 | PS65-315/750 | PS65-250/750 | - |
| 750 | 7 | PS80-250/450 | PS80-200/450 | PST80-200/450 |
| 750 | 8 | PS80-250/550 | PS80-200/550 | PST80-200/550 |
| 750 | 9 | PS8O-315/75O | PS80-250/750 | - |
| 750 | 10 | PS8O-315/75O | PS80-25（V750 | ■ |
| 750 | 11 | PS80-315/7 50 | PS80-250/750 | - |
| 750 | 12 | PS80-315/900 | PS80-250/900 | - |
| 750 | 13 | PS80-315/900 | PS80-250/900 | - |
| 1000 | 7 | PS100-25Q/550 | PS100-20Q/550 | PST100-200/550 |
| 1000 | 8 | PS 100-250/7 50 | PS100-200/750 | PST100-200/750 |
| 1000 | 9 | PS100-315/750 | PS100-25Q/750 | ■ |
| 1000 | 10 | PS100-315/900 | PS100-250/900 | - |
| 1000 | 11 | PS100-315/900 | PS100-250/900 | - |
| 1000 | 12 | PS100-315/1100 | PS100-250/1100 | - |
| 1000 | 13 | PS100-315/1100 | PS100-25Q/1100 | - |
| 1000 | 14 | PSC80-370A1/1320 | PSC80-370A1/1320 | - |
| 1000 | 15 | PSC80-370A1/1320 | PSC80-370A1/1320 | ■ |
| 1250 | 7 | PS 125-250/900 | PS125-200/900 | ■ |
| 1250 | 8 | PS125-250A100 | PS125-200/1100 | ■ |
| 1250 | 9 | PS125-315/1100 | PS125-250/1100 | - |
| 1250 | 10 | PS125-315/1320 | PS125-250/1320 | ■ |
| 1250 | 11 | PS125-315/1320 | PS125-250/1320 | - |
| 1250 | 12 | PS125-315/1600 | PS125-250/1600 | - |
| 1250 | 13 | PS125-315A6O0 | PS125-250/1600 | - |

| GPM | Bar | Pump for diesel *Bomba p»n di»s6l* 2900rpm | Pump for electric *Bomba para Bf^ctrfco* 3500rpm | Motor pump *Bomba Motor* 3500rpm |
|---|---|---|---|---|
| 1250 | 14 | PSa（)0-375A2/2000 | PSC100-375A2/2000 | - |
| 1250 | 15 | PSa00-375A2/2000 | PSC100-375A2/2000 | - |
| 1250 | 17 | PSC100-375B1/2500 | PSC100-375B1/2500 | - |
| 1500 | 8 | PS125-25Q/1100 | PS125-20Q/1100 | - |
| 1500 | 9 | PS125-315/1100 | PS125-250/1100 | - |
| 1500 | 10 | PS125-315/1320 | PS125-250/1320 | - |
| 1500 | 11 | PS125-315/1320 | PS125-250/1320 | - |
| 1500 | 12 | PS125-315/1600 | PS125-250/1600 | - |
| 1500 | 13 | PS125-315/1600 | PS125-250/1600 | - |
| 1500 | 15 | PSC100-375B1/2500 | PSC100-375B1/2500 | - |
| 1500 | 18 | PSaO0-375Al/25O0 | PSC100-375A1/2500 | - |
| 2000 | 8 | PS150-250A600 | PS150-200/1600 | - |
| 2000 | 10 | PS150-315/2000 | PS150-250/2000 | - |
| 2000 | 11 | PSO25-29DA1/2000 | PSC125-290A1/2000 | - |
| 2000 | 12 | PSCL25-365A3/2500 | PSC125-365A3/2500 | - |
| 2000 | 13 | PS150-315/2500 | PS150-250/2500 | - |
| 2000 | 15 | PSCL25-365A2/3150 | PSC125-365A2/3150 | - |
| 2000 | 17 | PSC125-365B1/3550 | PSC125-365B1/3550 | - |
| 2500 | 8 | PS150-250/1600 | PS150-200/1600 | - |
| 2500 | 10 | PS150-315/2000 | PS150-250/2000 | - |
| 2500 | 12 | PS150-315/2500 | PS150-250/2500 | - |
| 2500 | 13 | PSC15O-46OB2/315O | PSC15O-4€OB2/315O | - |
| 2500 | 15 | PSCL25-365A2/3550 | PSC125-365A2/355O | - |
| 2500 | 17 | PSC125-365B1/3550 | PSC125-365B1/3550 | - |
| 3000 | 10 | PSa50-360A3/2500 | PSC150-360A3/2500 | - |
| 3000 | 12 | PSa5O-36OA2/355O | PSC15O-36OA2/355O | - |
| 3000 | 13 | PSC15O^46OB2/355O | PSC15O^46OB2/355O | - |
| 3000 | 14 | PSC150-360B1/4000 | PSC15O-36OB1/4000 | - |
| 3000 | 16 | PSC150^460B1/4500 | PSC15O-46OB1/4500 | - |
| 4000 | 11 | PSC200-420B3/4000 | PSC200-420B3/4000 | - |
| 4000 | 14 | PSC200^420B2/5000 | P5C200420B2/5000 | - |
| 4000 | 15 | PSC150-360AV5000 | PSC150-360A1/5000 | - |
| 4000 | 17 | PSC15O-46OA1/5600 | PSC150^460A1/5600 | - |
| 5000 | 10 | PSC200-320B2/4000 | PSC200-320B2/4000 | - |
| 5000 | 11 | PSC200-320B1/5000 | PSC200-320B1/5000 | - |
| 5000 | 12 | PSC200-320A1/5600 | PSC200-320A1/5600 | - |
| 5000 | 14 | PSC200^420A2/5600 | PSC200^20A2/5600 | - |
| 5000 | 16 | PSC200420B1/7100 | PSC200420B1/7100 | - |
| 5000 | 17 | PSC200^420A1/8000 | PSC200^20A1/8000 | - |

Other sizes can provide on request.ZBo/*opedido otros modelos disponible.*

# Horizontal Water Pumps PSM

**PSM**

# Product Specification (50HZ)

## TECHNICAL DATA / *DATOS TECNICOS*

| MODEL *UODELO* | Power *P娥0以这* | | rpm | n% | n% at 75% | n% at 50% | cosφ | A | | | Nm | Inaax/In | | Is/n | kg |
|---|---|---|---|---|---|---|---|---|---|---|---|---|---|---|---|
| | kw | tin | | | | | | 380V | 400V | 415V | | | | | |
| YE3-801-2 | 0.75 | 1 | 2880 | 80.7 | 80.7 | 79.1 | 0.82 | 1.72 | 1.64 | 1.58 | 2.49 | 2.3 | 2.3 | 7.0 | 18.1 |
| YE3-802-2 | 1.1 | 1.5 | 2880 | 82.7 | 82.7 | 81.0 | 0.83 | 2.43 | Z31 | Z23 | 3.65 | 2.2 | 2.3 | 7.3 | 19.5 |
| YE3-9OS-2 | 1.5 | 2 | 2895 | 842 | 84.2 | 82.5 | 0.84 | 3.22 | 3.06 | 2.95 | 4.95 | 2.2 | 2.3 | 7.6 | 23.3 |
| YE3-90L-2 | 2.2 | 3 | 2895 | 85.9 | 85.9 | 84.2 | 0.85 | 4.58 | 4.35 | 4.19 | 7.26 | 2.2 | 2.3 | 7.6 | 27.1 |
| YE3-100L-2 | 3 | 4 | 2895 | 87.1 | 87.1 | 85.4 | 0.87 | 6.02 | 5.71 | 5.51 | 9.90 | 2.2 | 2.3 | 7.8 | 38.8 |
| YE3-112M-2 | 4 | 5.5 | 2905 | 88.1 | 88.1 | 86.3 | 0.88 | 7.84 | 7.45 | 7.18 | 13.1 | 2.2 | 2.3 | 8.3 | 48.3 |
| YE3-132S1-2 | 5.5 | 7.5 | 2930 | 892 | 89.2 | 87.4 | 0.88 | 10.6 | 10.1 | 9.75 | 17.9 | 2.0 | 2.3 | 8.3 | 55.1 |
| YE3-132S-2 | 7.5 | 10 | 2930 | 90.1 | 90.1 | 88.3 | 0.88 | 14.4 | 13.7 | 132 | 24.4 | 2.0 | 2.3 | 7.9 | 69.2 |
| YE3-160M1-2 | 11 | 15 | 2945 | 912 | 91.2 | 89.4 | 0.89 | 20.6 | 19.6 | 18.9 | 35.7 | 2.0 | 2.3 | 8.1 | 113 |
| YE3-160M2-2 | 15 | 20 | 2945 | 91.9 | 91.9 | 90.1 | 0.89 | 27.9 | 26.5 | 25.5 | 48.6 | 2.0 | 2.3 | 8.1 | 123 |
| YE3-160L-2 | 18.5 | 25 | 2940 | 92.4 | 92.4 | 90.6 | 0.89 | 342 | 32.5 | 31.3 | 60.1 | 2.0 | 2.3 | 8.2 | 142 |
| YE3-180M-2 | 22 | 30 | 2955 | 92.7 | 92.7 | 90.8 | 0.89 | 40.5 | 38.5 | 37.1 | 71.1 | 2.0 | 2.3 | 8.2 | 182 |
| YE3-200L1-2 | 30 | 40 | 2960 | 93.3 | 93.3 | 91.4 | 0.89 | 54.9 | 52.1 | 50.3 | 96.8 | 2.0 | 2.3 | 7.6 | 246 |
| YE3-200L2-2 | 37 | 50 | 2960 | 93.7 | 93.7 | 91.8 | 0.89 | 67.4 | 64.0 | 61.7 | 119.4 | 2.0 | 2.3 | 7.6 | 265 |
| YE3-225M-2 | 45 | 60 | 2965 | 94.0 | 94.0 | 92.1 | 0.90 | 80.8 | 76.8 | 74.0 | 144.9 | 2.0 | 2.3 | 7.7 | 323 |
| YE3-250M-2 | 55 | 75 | 2970 | 94.3 | 94.3 | 92.4 | 0.90 | 98.5 | 93.5 | 90.2 | 176.9 | 2.0 | 2.3 | 7.7 | 413 |
| YE3-280S-2 | 75 | 100 | 2975 | 94.7 | 94.7 | 92.8 | 0.90 | 134 | 127 | 122 | 240.8 | 1.8 | 2.3 | 7.1 | 546 |
| YE3-280M-2 | 90 | 125 | 2975 | 95.0 | 95.0 | 93.1 | 0.90 | 160 | 152 | 146 | 288.9 | 1.8 | 2.3 | 7.1 | 569 |
| YE3-315S-2 | 110 | 150 | 2978 | 952 | 95.2 | 93.3 | 0.90 | 195 | 185 | 179 | 352.8 | 1.8 | 2.3 | 7.1 | 897 |
| YE3-315M-2 | 132 | 180 | 2978 | 95.4 | 95.4 | 93.5 | 0.90 | 234 | 222 | 214 | 423.3 | 1.8 | 2.3 | 7.1 | 1029 |
| YE3-315L1-2 | 160 | 220 | 2980 | 95.6 | 95.6 | 93.7 | 0.91 | 279 | 265 | 256 | 512.8 | 1.8 | 2.3 | 72 | 1067 |
| YE3-315L2-2 | 200 | 270 | 2980 | 95.8 | 95.8 | 93.9 | 0.91 | 349 | 331 | 319 | 640.9 | 1.8 | 2.2 | 72 | 1194 |
| YE3-355M-2 | 250 | 340 | 2982 | 95.8 | 95.8 | 93.9 | 0.91 | 436 | 414 | 399 | 800.6 | 1.6 | 2.2 | 72 | 1685 |
| YE3-355L-2 | 315 | 430 | 2982 | 95.8 | 95.8 | 93.9 | 0.91 | 549 | 522 | 503 | 1009 | 1.6 | 2.2 | 72 | 1734 |

PURITY

## DIMENSIONS / *DIMENSIONES*

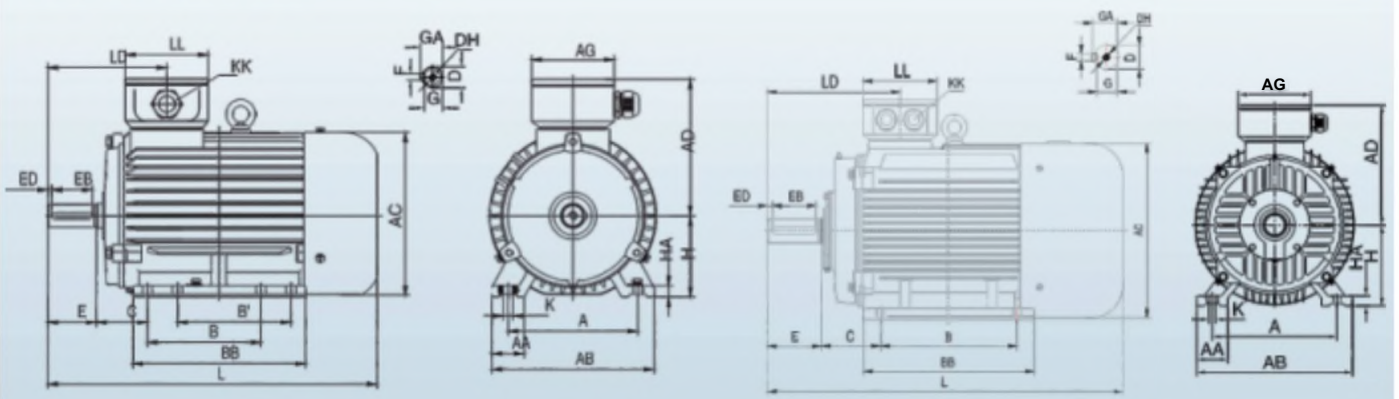


80-132 160-355

| MODEL *MODELO* | DIMEN SION S *1 DIMEN SION ES* mm | | | | | | | | | | | | | | | | | | | | | | |
|---|---|---|---|---|---|---|---|---|---|---|---|---|---|---|---|---|---|---|---|---|---|---|---|
| | A | AA | AB | AC | AD | AG | B | BB | C | D | DH | E | EB | ED | F | G | GA | H | HA | K | KK | L | LD | LL |
| 80 | 125 | 34 | 160 | 167 | 147 | 102 | 100 | 150 | 50 | 19 | M6X16 | 40 | 30 | 2.5 | 6 | 15.5 | 21.5 | 80 | 10 | 4-010 | 1-M25X1.5 | 304 | 119 | 102 |
| 90S | 140 | 36 | 176 | 182.4 | 154.5 | 102 | 100 | 161 | 56 | 24 | M8X19 | 50 | 40 | 5 | 8 | 20 | 27 | 90 | 12 | 4-G10 | 1-M25X1.5 | 336 | 143 | 102 |
| 90L | 140 | 36 | 176 | 182.4 | 154.5 | 102 | 125 | 186 | 56 | 24 | M8X19 | 50 | 40 | 5 | 8 | 20 | 27 | 90 | 12 | 4-010 | 1-M25X1.5 | 361 | 143 | 102 |
| 100L | 160 | 40 | 200 | 205.4 | 166 | 102 | 140 | 213 | 63 | 28 | M10X22 | 60 | 50 | 5 | 8 | 24 | 31 | 100 | 14 | 4-012 | 1-M32X1.5 | 406 | 147 | 102 |
| 112M | 190 | 50 | 240 | 230 | 188 | 118 | 140 | 188 | 70 | 28 | MI0X22 | 60 | 50 | 5 | 8 | 24 | 31 | 112 | 15 | 4-012 | 2-M32X1.5 | 394 | 147 | 110 |
| 132S | 216 | 55 | 265 | 258.4 | 203 | 118 | 140 | 186 | 89 | 38 | M12X28 | 80 | 65 | 5 | 10 | 33 | 41 | 132 | 18 | 4-012 | 2-M32X1.5 | 438 | 172 | 110 |
| 132M | 216 | 55 | 265 | 258.4 | 203 | 118 | 178 | 224 | 89 | 38 | M12X28 | 80 | 65 | 7.5 | 10 | 33 | 41 | 132 | 18 | 4-012 | 2-M32X1.5 | 476 | 172 | 110 |
| 160M | 254 | 65 | 314 | 314 | 251 | 162 | 210 | 260 | 108 | 42 | M16X36 | 110 | 90 | 7.5 | 12 | 37 | 45 | 160 | 20 | 4-O14.5 | 2-M40X1.5 | 608 | 256 | 152 |
| 160L | 254 | 65 | 314 | 314 | 251 | 162 | 254 | 304 | 108 | 42 | M16X36 | 110 | 90 | 10 | 12 | 37 | 45 | 160 | 20 | 4-0)14.5 | 2-M40X1.5 | 652 | 256 | 152 |
| 180M | 279 | 70 | 349 | 355 | 267 | 162 | 241 | 311 | 121 | 48 | M16X36 | 110 | 90 | 10 | 14 | 42.5 | 51.5 | 180 | 22 | 4・破 14.5 | 2-M40X1.5 | 688 | 271 | 152 |
| 180L | 279 | 70 | 349 | 355 | 267 | 162 | 279 | 349 | 121 | 48 | M16X36 | 110 | 90 | 10 | 14 | 42.5 | 51.5 | 180 | 22 | 4-014.5 | 2-M40X1.5 | 726 | 271 | 152 |
| 200L | 318 | 70 | 388 | 397 | 299 | 210 | 305 | 369 | 133 | 55 | M20X42 | 110 | 100 | 10 | 16 | 49 | 59 | 200 | 25 | 4-018.5 | 2-M50X1.5 | 779 | 296 | 190 |
| 225S | 356 | 75 | 431 | 446 | 322 | 210 | 286 | 368 | 149 | 60 | M20X42 | 140 | 125 | 5 | 18 | 53 | 64 | 225 | 28 | 4-018.5 | 2-M50X1.5 | 824 | 329 | 190 |
| 225M | 356 | 75 | 431 | 446 | 322 | 210 | 311 | 393 | 149 | 55 | M20X42 | 110 | 100 | 7.5 | 16 | 49 | 59 | 225 | 28 | 4-018.5 | 2-M50X1.5 | 819 | 299 | 190 |
| 250M | 406 | 80 | 484 | 485 | 358 | 248 | 349 | 445 | 168 | 60 | M20X42 | 140 | 125 | 7.5 | 18 | 53 | 64 | 250 | 30 | 4-024 | 2-M63X1.5 | 910 | 347 | 218 |
| 280S | 457 | 85 | 542 | 547 | 387 | 248 | 368 | 485 | 190 | 65 | M20X42 | 140 | 125 | 7.5 | 18 | 58 | 69 | 280 | 35 | 4-0>24 | 2-M63X1.5 | 982 | 355.5 | 218 |
| 280M | 457 | 85 | 542 | 547 | 387 | 248 | 419 | 536 | 190 | 65 | M20X42 | 140 | 125 | 7.5 | 18 | 58 | 69 | 280 | 35 | 4-024 | 2-M63X1.5 | 1033 | 355.5 | 218 |
| 315S | 508 | 120 | 628 | 620 | 527 | 320 | 406 | 570 | 216 | 65 | M20X42 | 140 | 125 | 7.5 | 18 | 58 | 69 | 315 | 45 | 4-028 | 2-M63X1.5 | 1194 | 397 | 280 |
| 315M | 508 | 120 | 628 | 620 | 527 | 320 | 457 | 680 | 216 | 65 | M20X42 | 140 | 125 | 7.5 | 18 | 58 | 69 | 315 | 45 | 4-028 | 2-M63X1.5 | 1304 | 397 | 280 |
| 315L | 508 | 120 | 628 | 620 | 527 | 320 | 508 | 680 | 216 | 65 | M20X42 | 140 | 125 | 7.5 | 18 | 58 | 69 | 315 | 45 | 4-028 | 2-M63X1.5 | 1304 | 397 | 280 |
| 355M | 610 | 116 | 726 | 698 | 642 | 380 | 560 | 750 | 254 | 75 | M20X42 | 140 | 130 | 5 | 20 | 67.5 | 79.5 | 355 | 52 | 6-028 | 2-M63X1.5 | 1486 | 414 | 330 |
| 355L | 610 | 116 | 726 | 698 | 642 | 380 | 630 | 750 | 254 | 75 | M20X42 | 140 | 130 | 5 | 20 | 67.5 | 79.5 | 355 | 52 | 6-028 | 2-M63X1.5 | 1486 | 414 | 330 |

# Product Specification (60HZ)

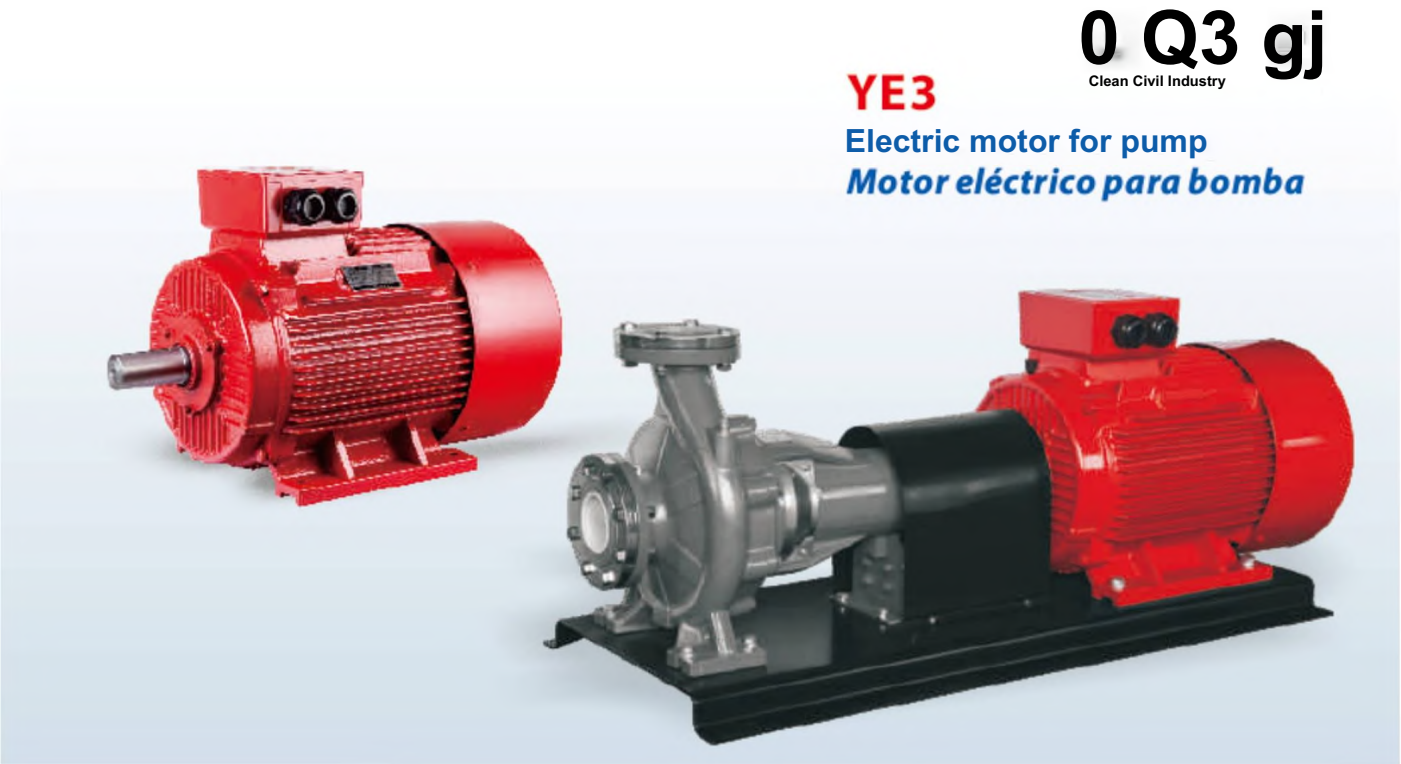


## TECHNICAL DATA / *DATOS itCNICOS*

| MODEL *MODELO* | Power *Potencia* | | rpm | q% | n* at 75% | q% at 50% | co&4> | A | | Nm | Tmax/Tn | TsfTn | Is/n | kg |
|---|---|---|---|---|---|---|---|---|---|---|---|---|---|---|
| | kw | hp | | | | | | 220V | 380V | | | | | |
| YES-助 1-2 | 0.75 | 1 | 3500 | 80.7 | 80.7 | 79.1 | 032 | 3.6 | L83 | 249 | 23 | 23 | 7.0 | l&l |
| YE3 · 助 2-2 | 11 | L5 | 3500 | 827 | 827 | 81J0 | 033 | 4.5 | 258 | 3.65 | 22 | 23 | 7.3 | 19.5 |
| YE3-90S-2 | 1.5 | 2 | 3500 | 842 | 84.2 | 82.5 | 0.84 | 6.8 | 3.43 | 4.95 | 22 | 23 | 7.6 | 23.3 |
| YE3-90L-2 | 22 | 3 | 3500 | 85.9 | 85.9 | 842 | 035 | 9.6 | 4.85 | 7.26 | 22 | 23 | 7.6 | 27.1 |
| YE3-100L-2 | 3 | 4 | 3500 | 87.1 | 87.1 | 85.4 | 037 | 1L5 | 6.31 | 9.90 | 22 | 2.3 | 7.8 | 38.8 |
| YE3-112M-2 | 4 | 5.5 | 3500 | 881 | 88.1 | 863 | 038 | 14.5 | 81 | 13.1 | 22 | Z3 | &3 | 4&3 |
| YE3-132S1-2 | 5.5 | 7.5 | 3500 | 892 | 的.2 | 87.4 | 0.88 | 22 | 11 | 17.9 | 20 | 2.3 | 83 | 55.1 |
| YE3-132S-2 | 7.5 | 10 | 3500 | 901 | 90.1 | 883 | 038 | 28 | 145 | 24.4 | 20 | 23 | 7.9 | 69.2 |
| YE3-160M1-2 | 11 | 15 | 3500 | 912 | 9L2 | 89.4 | 039 | 42 | 213 | 35.7 | 20 | 2.3 | 8.1 | 113 |
| YE3-160M2-2 | 15 | 20 | 3500 | 919 | 9L9 | 90.1 | 039 | 54 | 283 | 4&6 | 20 | 23 | &1 | 123 |
| YE3-160L-2 | 18.5 | 25 | 3500 | 924 | 924 | 90.6 | 039 | 68 | 34.7 | 60.1 | 20 | 23 | &2 | 142 |
| YE3-180M-2 | 22 | 30 | 3500 | 927 | 927 | 903 | 039 | 80 | 41 | 711 | 20 | 23 | &2 | 182 |
| YE3-200U-2 | 30 | 40 | 3500 | 933 | 93.3 | 91.4 | 039 | 104 | 55.5 | 96.8 | 20 | 23 | 7.6 | 246 |
| YE3-200L2-2 | 37 | 50 | 3500 | 93.7 | 93.7 | 913 | 039 | 130 | 675 | 119.4 | 20 | 23 | 7.6 | 265 |
| YE3-225M-2 | 45 | 60 | 3500 | 94.0 | 94.0 | 92.1 | 0.90 | 150 | 823 | 144.9 | 20 | 23 | 7.7 | 323 |
| YE3-250M-2 | 55 | 75 | 3500 | 943 | 94.3 | 92.4 | 050 | 192 | 101 | 176.9 | 20 | 23 | 7.7 | 413 |
| YE3-280S-2 | 75 | 100 | 3500 | 94.7 | 94.7 | 923 | 050 | 245 | 134 | 240.8 | 18 | 23 | 7.1 | 546 |
| YE3-280M-2 | 90 | 125 | 3500 | 95X) | 95.0 | 93.1 | 030 | 312 | 160 | 288.9 | L8 | 23 | 7.1 | 569 |
| YE3<315S<2 | 110 | 150 | 3500 | 952 | 95.2 | 933 | 0.90 | 400 | 195 | 3528 | L8 | 2.3 | 7.1 | 897 |
| YE3-315M-2 | 132 | 180 | 3500 | 95.4 | 95.4 | 93.5 | 050 | 425 | 233 | 423.3 | L8 | 2.3 | 7.1 | 1029 |
| YE3-315L1-2 | 160 | 220 | 3500 | 95.6 | 95.6 | 93.7 | 0.91 | 600 | 279 | 5128 | 13 | 23 | 7.2 | 1067 |
| YE3-315L2-2 | 200 | 270 | 3500 | 953 | 95.8 | 93.9 | 031 | 630 | 349 | 640.9 | L8 | 22 | 7.2 | 1194 |
| YE3-355M-2 | 250 | 340 | 3500 | 953 | 95.8 | 93.9 | 031 | 800 | 436 | 800.6 | 16 | 2.2 | 7.2 | 1685 |
| YE3-355L2 | 315 | 430 | 3500 | 953 | 95.8 | 935 | 031 | 990 | 549 | 1009 | 16 | 2.2 | 7.2 | 1734 |

## DIMENSIONS / *DIMENSIONES*

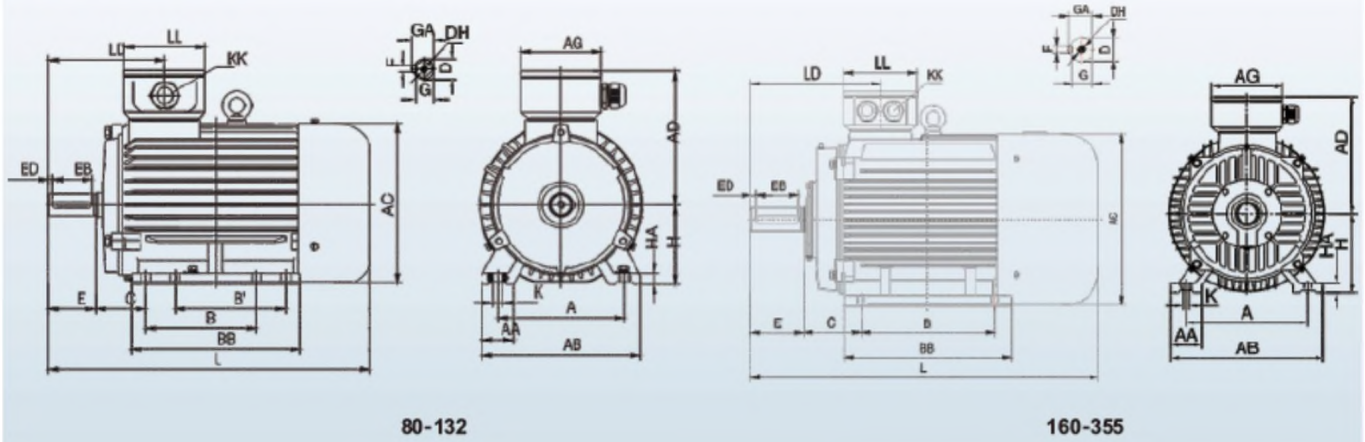


| MODEL *MODELO* | DIMENSIONS / DIMENSIONES mm | | | | | | | | | | | | | | | | | | | | | | |
|---|---|---|---|---|---|---|---|---|---|---|---|---|---|---|---|---|---|---|---|---|---|---|---|
| | A | AA | AB | AC | AD | AG | B | BB | C | D | DH | E | *EB* | ED | F | G | GA | H | HA | K | KK | L | LD | LL |
| 80 | 125 | 34 | 160 | 167 | 147 | 102 | 100 | 150 | 50 | 19 | M6X16 | 40 | 30 | 25 | 6 | 15.5 | 21.5 | 80 | 10 | 4-010 | 1-M25XL5 | 304 | 119 | 102 |
| 90S | 140 | 36 | 176 | 1824 | 154.5 | 102 | 100 | 161 | 56 | 24 | M8X19 | 50 | 40 | 5 | 8 | *20* | 27 | 90 | *12* | 4-<W0 | 1-M25XL5 | 336 | 143 | 102 |
| 90L | 140 | 36 | 176 | 182.4 | 154.5 | 102 | 125 | 186 | 56 | 24 | M8X19 | 50 | 40 | 5 | 8 | *20* | 27 | 90 | *12* | 4-010 | 1-M25XL5 | 361 | 143 | 102 |
| 100L | 160 | 40 | 200 | 205.4 | 166 | 102 | 140 | 213 | 63 | 28 | M10X22 | 60 | 50 | 5 | 8 | 24 | 31 | 100 | 14 | 4-012 | 1-M32XL5 | 406 | 147 | 102 |
| 112M | 190 | 50 | 240 | 230 | 188 | 118 | 140 | 188 | 70 | 28 | M10X22 | 60 | 50 | 5 | 8 | 24 | 31 | 112 | 15 | 4-O12 | 2-M32XL5 | 394 | 147 | 110 |
| 132S | 216 | 55 | 265 | 25&4 | 203 | 118 | 140 | 186 | 89 | *38* | M12X28 | 80 | 65 | 5 | 10 | 33 | 41 | 132 | 18 | 4-<W2 | 2-M32XL5 | 438 | 172 | 110 |
| 132M | 216 | 55 | 265 | 258.4 | 203 | 118 | 178 | 224 | 89 | *38* | M12X28 | 80 | 65 | 75 | 10 | 33 | 41 | 132 | 18 | 4-012 | 2-M32XL5 | 476 | 172 | 110 |
| 160M | 254 | 65 | 314 | 314 | 251 | 162 | 210 | 260 | 108 | 42 | M16X36 | no | 90 | 75 | *12* | 37 | 45 | 160 | 20 | 4-0145 | 2-M40XL5 | 608 | 256 | 152 |
| 160L | 254 | 65 | 314 | 314 | 251 | 162 | 254 | 304 | 108 | 42 | M16X36 | no | 90 | 10 | *12* | 37 | 45 | 160 | 20 | 4-014.5 | 2-M40X1.5 | 652 | 256 | 152 |
| 1B0M | 279 | 70 | 349 | 355 | 267 | 162 | 241 | 311 | 121 | 48 | M16X36 | 110 | 90 | 10 | 14 | 425 | 51.5 | 180 | 22 | 4-0)145 | 2-M40XL5 | 688 | 271 | 152 |
| 180L | 279 | 70 | 349 | 355 | 267 | 162 | 279 | 349 | 121 | 48 | M16X36 | no | 90 | 10 | 14 | 425 | 51.5 | 180 | 22 | 4-014.5 | 2-M40X1.5 | 726 | 271 | 152 |
| 200L | 318 | 70 | 388 | 397 | 299 | 210 | 305 | 369 | 133 | 55 | M20X42 | 110 | 100 | 10 | 16 | 49 | 59 | 200 | 25 | 4-a）i&5 | 2-M50XL5 | 779 | 296 | 190 |
| *22SS* | 356 | 75 | 431 | 446 | *322* | 210 | 286 | 祐8 | 149 | 60 | M20X42 | 140 | 125 | 5 | 18 | 53 | 64 | 225 | 28 | 4-a）ia5 | 2-M5OX1.5 | 824 | *329* | 190 |
| 22 5M | 356 | 75 | 431 | 446 | *322* | 210 | 311 | 393 | 149 | 55 | M20X42 | no | 100 | 75 | 16 | 49 | 59 | 225 | 28 | 4-<wa5 | 2-M50XL5 | 819 | 299 | 190 |
| 250M | 406 | 80 | 484 | 485 | *358* | 248 | 349 | 445 | 168 | 60 | M20X42 | 140 | 125 | 7.5 | 18 | 53 | 64 | 250 | 30 | 4-024 | 2-M63XL5 | 910 | 347 | 218 |
| 280S | 457 | 85 | 542 | 547 | *387* | 248 | 368 | 4«5 | 190 | 65 | M20X42 | 140 | 125 | 75 | 18 | 58 | 69 | 280 | 35 | 4-024 | 2-M63XL5 | 982 | 3555 | 218 |
| 280M | 457 | 85 | 542 | 547 | *387* | 248 | 419 | 536 | 190 | 65 | M20X42 | 140 | 125 | 7.5 | 18 | 58 | 69 | 280 | 35 | 4-0>24 | 2-M63X1.5 | 1033 | 355.5 | 218 |
| 315S | 508 | 120 | 628 | 620 | 527 | 320 | 406 | 570 | 216 | 65 | M20X42 | 140 | 125 | 75 | 18 | 58 | 69 | 315 | 45 | 4-<J）28 | 2-M63XL5 | 1194 | 397 | 280 |
| 315M | 508 | 120 | 628 | 620 | 527 | 320 | 457 | 680 | 216 | 65 | M20X42 | 140 | 125 | 7.5 | 18 | 58 | 69 | 315 | 45 | 4-028 | 2-M63X1.5 | 1304 | 397 | 280 |
| 315L | 508 | 120 | 628 | 620 | 527 | *320* | 508 | 680 | 216 | 65 | M20X42 | 140 | 125 | 75 | 18 | 58 | 69 | 315 | 45 | 4-028 | 2-M63XL5 | 1304 | 397 | 280 |
| 35 5M | 610 | 116 | 726 | 698 | 642 | *380* | 560 | 750 | 254 | 75 | M20X42 | 140 | 130 | 5 | 20 | 67.5 | 79.5 | 355 | 52 | 6-028 | 2-M63XL5 | I486 | 414 | 330 |
| 355L | 610 | 116 | 726 | 698 | 642 | 380 | 630 | 750 | 254 | 75 | M20X42 | 140 | 130 | 5 | 20 | 67.5 | 79.5 | 355 | 52 | 6-<J）28 | 2-M63XL5 | 14S6 | 414 | 330 |

# Horizontal Water Pumps PST

## PST

### TECHNICAL DESCRIPTION

-New EN733 standard centrifugal pump

- Original design by PURITY (patented)
- Both square motor & round motor available
- YE3 high efficient motor, with protection IP55 class F
- Pump case with anti-corrosive coating
- Impeller in stainless steel AISI 304 or cast iron
- Shaft in stainless steel AISI 304 or galvanized iron
- Galvanized counter flange with bolts, nuts and gaskets
- Quality NSK bearing, wear resistance mechanical seal

# Product Specification (50HZ)


**NEW/NUEVO**

## TECHNICAL DESCRIPTION

■ New EN733 standard centrifugal pump
-Original design by PURITY (patented)
■ Both square motor & round motor available
-YE3 high efficient motor, with protection IP55 class F
-Pump case with anti-corrosive coating
■Impeller in stainless steel AISI 304 or cast iron
■ Shaft in stainless steel AISI 304 or galvanized iron
■ Galvanized counter flange with bolts, nuts and gaskets
• Quality NSK bearing, wear resistance mechanical seal

## APPLICATIONS

■ Suitable for use with clean water and liquids that are not chemically
■ aggressive towards the materials from which the pump is made.
■ The EN733 centrifugal pumps are recommended for use in water supply,
■ cleaning sets, pressure boosting, firefighting sets, irrigation, industrial
■ applications, water circulation in climatisation sets, agricultural.

## USING LIMITS

■ Liquid temperature between -10°C and +120°C
■ Ambient temperature up to +50°C
■ Max. working pressure 16 bar
■ Continuous service S1

## PATENTS

-Registered model PST
-Registered Patent Design n 201530478502.0

## STANDARD IMPELLER MATERIAL

| DISCHARGE SIZE *DE DESCARGA* | IMPELLER SIZE *DEL IMPULSOR* | | | | | | |
|---|---|---|---|---|---|---|---|
| | 125 | 160 | 200 | 250 | 250D | 315 | 400 |
| 32 | SS304 | SS304 | SS304 | Cast iron | SS304 | | |
| 40 | Cast iron | Cast iron | SS304 | Cast iron | / | | |
| 50 | Cast iron | Cast iron | Cast iron | Cast iron | / | | |
| 65 | Cast iron | Cast iron | Cast iron | Cast iron | / | Cast iron | |
| 80 | Cast iron | Cast iron | Cast iron | Cast iron | / | Cast iron | Cast iron |
| 100 | | Cast iron | Cast iron | Cast iron | / | Cast iron | Cast iron |
| 125 | | | Cast iron | Cast iron | / | Cast iron | Cast iron |
| 150 | | | Cast iron | Cast iron | / | Cast iron | Cast iron |
| 200 | | | | Cast iron | / | Cast iron | Cast iron |
| 250 | | | | | / | Cast iron | Cast iron |

TECHICAL DATA/DATOS TECNICOS

**50 *HZ* n=2900 1/min**

| MODEL *MODELO* | Power *Potencia* kw | hp | us gpm / l/min / m³/h | Q= DELI VERY/ *CAUDAL* 0 | 26 | 40 | 66 | 79 | 106 | 119 | 159 | 185 | 211 | 238 | 317 | 370 | 396 | 476 | 529 | 608 | 793 | 925 | DN mm |
|---|---|---|---|---|---|---|---|---|---|---|---|---|---|---|---|---|---|---|---|---|---|---|---|
| | | | | 0 | 100 | 150 | 250 | 300 | 400 | 450 | 600 | 700 | 800 | 900 | 1200 | 1400 | 1500 | 1800 | 2000 | 2300 | 3000 | 3500 | |
| | | | | 0 | 6 | 9 | 15 | 18 | 24 | 27 | 36 | 42 | 48 | 54 | 72 | 84 | 90 | 108 | 120 | 138 | 180 | 210 | |
| 32-125/07 | 0.75 | 1 | | 17.5 | 16.7 | 15 | 12 | 9 | | | | | | | | | | | | | | | 50x32 |
| 32-125/11 | 1.1 | 1.5 | | 22 | 21 | 197 | 16.5 | 14.5 | 9 | | | | | | | | | | | | | | 50x32 |
| 32-160/15 | 1.5 | 2 | | 25.4 | 23.7 | 22.5 | 18.5 | 15.8 | | | | | | | | | | | | | | | 50x32 |
| 32-160/22 | 2.2 | 3 | | 31 | 29.6 | 28.5 | 24.5 | 22 | 15 | | | | | | | | | | | | | | 50x32 |
| 32-160/30 | 3 | 4 | | 35 | 343 | 34 | 28 | 25.5 | 19 | 15 | | | | | | | | | | | | | 50x32 |
| 32-200/30 | 3 | 4 | | 44.2 | 43 | 39.8 | 35.2 | 32.2 | 24.6 | 19.8 | | | | | | | | | | | | | 50x32 |
| 32-200/40 | 4 | 5.5 | | 54.5 | ***52*** | 50 | 45.5 | 41.9 | 35 | 30.3 | | | | | | | | | | | | | 50x32 |
| 32-250/55 | 5.5 | 7.5 | | 60 | 59.5 | 59 | 55 | 51 | 34.5 | | | | | | | | | | | | | | 50x32 |
| 32-250/75 | 7.5 | 10 | | 69.5 | 69 | 68.5 | 66 | 63 | S3 | | | | | | | | | | | | | | 50x32 |
| 32-250/110 | 11 | 15 | | 90 | 89.5 | 89 | 82 | 79 | 66 | | | | | | | | | | | | | | 50x32 |
| 32-250/55D | 5.5 | 7.5 | | 79.5 | 74.7 | 71.8 | 63 | 56 | 37.5 | | | | | | | | | | | | | | 50x32 |
| 32-250/75D | 75 | 10 | | 95 | 93 | 91 | 83 | 76 | 57.8 | | | | | | | | | | | | | | 50x32 |
| 40-125/11 | 1.1 | 1.5 | | 14.7 | | | | 13.5 | 11.5 | 10.1 | 5.8 | | | | | | | | | | | | 65x40 |
| 40-125/15 | 15 | ***2*** | | 18.1 | | | | 17 | 15 | 13.9 | 9.6 | 6 | | | | | | | | | | | 65x40 |
| 40-125/22 | 2.2 | 3 | | 24.5 | | | | 23.2 | 21.5 | 20.2 | 16 | 13 | 83 | | | | | | | | | | 65x40 |
| 40-160/30 | 3 | 4 | | 31.8 | | | | 29.5 | 27.5 | 26.3 | 21.5 | 17.5 | | | | | | | | | | | 65x40 |
| 40-160/40 | 4 | 5.5 | | 38 | | | | 36 | 34 | 33 | 28.5 | 25 | 20.1 | | | | | | | | | | 65x40 |
| 40-200/55 | 5.5 | 7.5 | | 46 | | | | 43.8 | 41.3 | 40.1 | 35 | 30 | | | | | | | | | | | 65x40 |
| 40-200/75 | 7.5 | 10 | | 57 | | | | 53.6 | 51.5 | 50 | 45 | 41 | 36.5 | | | | | | | | | | 6Sx40 |
| 40-250/92 | 9.2 | 12.5 | | 64 | | | | 59 | 565 | 55 | 49.5 | 45 | 39.8 | | | | | | | | | | 65x40 |
| 40-250/110 | 11 | 15 | | ***72*** | | | | 67.5 | 66 | 615 | 57.5 | 52.2 | 47 | | | | | | | | | | 65x40 |
| 40-250/150 | 15 | 20 | | 84.5 | | | | 80 | 773 | 75.2 | 71 | 65 | 61 | | | | | | | | | | 65x40 |
| 50-125/22 | 2.2 | 3 | | 17 | | | | | | | 15.4 | 14 | 12.8 | 11.5 | 6.5 | | | | | | | | 65x50 |
| 50-125/30 | 3 | 4 | | 20 | | | | | | | 18.8 | 18 | 17 | 1S.6 | 11 | | | | | | | 1 B | 65x50 |
| 50-125/40 | 4 | 5.5 | | 24 | | | | | | | 23.1 | 23 | 21.5 | 203 | 15.8 | 11.8 | | | | | | | 65x50 |
| 50-160/55 | 5.5 | 7.5 | H(m) | ***32*** | | | | | | | 30.6 | 30 | 28 | 26.6 | 20.5 | 14.8 | | | | | | | 65x50 |
| 50-160/75 | 7.5 | 10 | | 40 | | | | | | | 38 | 37 | 36 | 34.4 | 29 | 24 | 21 | | | | | | 65x50 |
| 50-200/92 | 92 | 12.5 | | 50.5 | | | | | | | 46.8 | 45 | 43 | 40.9 | 32.5 | 267 | | | | | | | 6Sx50 |
| 50-200/110 | 11 | 15 | | 57.5 | | | | | | | 53.5 | 52 | 50 | 47.5 | 40 | 34 | 29 | | | | | | 65x50 |
| 50-200/150 | 15 | 20 | | 62 | | | | | | | 58 | 56.5 | 54.S | 52 | 44.5 | 39 | 35.5 | | | | | | 65x50 |
| 50-250/150 | 15 | 20 | | 68.5 | | | | | | | 64 | 63 | 61.5 | 59 | 50 | 41 | | | | | | | 65x50 |
| 50-250/185 | 18.5 | 25 | | 79 | | | | | | | 75.8 | 74.8 | 74 | 71.5 | 63.5 | 55.5 | 47 | | | | | | 65x50 |
| 50-250/220 | ***22*** | 30 | | 89.5 | | | | | | | 86 | 85.3 | 84 | 81.5 | 73.5 | 65.5 | 57 | | | | | | 65x50 |
| 65-125/40 | ***A*** | 5.5 | | 19 | | | | | | | | | 17.3 | 16.8 | 14.5 | 13 | 11.8 | | | | | | 80x65 |
| 65-125/55 | 5.5 | 7.5 | | ***23*** | | | | | | | | | 213 | 20.9 | 19 | 17.5 | 16.7 | 13.7 | | | | | 80x65 |
| 65-125/75 | 7.5 | 10 | | 27 | | | | | | | | | 26 | 25.6 | 24.5 | 23 | 22.5 | 20 | 18 | | | | 80x65 |
| 65-160/92 | 9.2 | 12.5 | | 33 | | | | | | | | | | 31.5 | 30 | 28 | 27.1 | 24 | 21.S | | | | 80x65 |
| 65-160/110 | 11 | 15 | | 36 | | | | | | | | | | 34.5 | 33 | 31.5 | 30.8 | 28 | 25.5 | | | | 80x65 |
| 65-160/150 | 15 | 20 | | 42 | | | | | | | | | | 41 | 40 | 38.5 | 37.8 | 35 | 33 | 29.5 | | | 80x65 |
| 65-200/150 | 15 | 20 | | 45 | | | | | | | | | | 45.5 | 43 | 41 | 40.2 | 36.5 | 34 | | | | 80x65 |
| 65-200/185 | 18.5 | 25 | | 52 | | | | | | | | | | 52.3 | 51 | 49 | 48.2 | 44.5 | 42 | | | | 80x65 |

| | | | | | | | | | | | | | | | | | | | | | | | | |
|---|---|---|---|---|---|---|---|---|---|---|---|---|---|---|---|---|---|---|---|---|---|---|---|---|
| 65-200/220 | 22 | 30 | | 59 | | | | | | | | | | 59.5 | 58 | 56 | 55 | 52 | 49.5 | 44.5 | | | 80x65 |
| 65-250/220 | 22 | 30 | | 64.8 | | | | | | | | | | 64.7 | 62 | 60 | 58.5 | 53 | 50 | | | | 80x65 |
| 65-250/300 | 30 | 40 | | 80 | | | | | | | | | | 79.8 | 77.5 | 75.5 | 74.5 | 70 | 66 | 58 | | | 80x65 |
| 65-250/370 | 37 | 50 | | 92 | | | | | | | | | | 90.5 | 88.5 | 87 | 85 | 80.5 | 78 | 68 | | | 80x65 |
| 65-315/370 | 37 | 50 | | 102 | | | | | | | | | | 99.2 | 97 | 95 | 94.5 | 92.4 | 90 | 83 | | | 80x65 |
| 65-315/450 | 45 | 60 | | 112 | | | | | | | | | | 109.2 | 107.7 | 105.8 | 104.5 | 102.5 | 100 | 93 | 66 | | 80x65 |
| 65-315/550 | 55 | 75 | | 122 | | | | | | | | | | 119.2 | 117.4 | 115.7 | 114.5 | 112.5 | 110 | 103 | 76 | | 80x65 |
| 65-315/750 | 75 | 100 | | 141 | | | | | | | | | | 139.8 | 137.3 | 135.6 | 134.5 | 132.5 | 130 | 122 | 96 | 65.5 | 80x65 |
| 80-125/40 | 4 | 5.5 | | 17 | | | | | | | | | 16.5 | 15.9 | 14.3 | 13.5 | 11.6 | 10 | 7.5 | | | | 100x80 |
| 80-125/55 | 5.5 | 7.5 | | 21 | | | | | | | | | 20.5 | 20 | 19 | 18 | 16.5 | 15 | 12.5 | 9.5 | | | 100x80 |
| 80-125/75 | 7.5 | 10 | | 26 | | | | | | | | | 25 | 25 | 24.5 | 23.8 | 22.5 | 21.5 | 19.5 | 16.5 | | | 100x80 |

TECHICAL DATA/DATOS TECNICOS

50 HZ n=2900 1/min

| MODEL | Power | | us | Q=DELIVERY/ OU/DiXU | | | | | | | | | | | | | | | | | | | DN |
|---|---|---|---|---|---|---|---|---|---|---|---|---|---|---|---|---|---|---|---|---|---|---|---|
| | Potencia | | gpm | 0 | 264 | 396 | 529 | 634 | 793 | 881 | 925 | 969 | 1057 | 1233 | 1322 | 1586 | 1762 | 2203 | 2643 | 3524 | 4405 | | |
| | | | l/min | 0 | 1000 | 1500 | 2000 | 2400 | 3000 | 3333 | 3500 | 3666 | 4000 | 4666 | 5000 | 6000 | 6666 | 8333 | 10000 | 13333 | 16666 | | |
| MODELO | kw | hp | m³/h | 0 | 60 | 90 | 120 | 144 | 180 | 200 | 210 | 220 | 240 | 280 | 300 | 360 | 400 | 500 | 600 | 800 | 1000 | | mm |
| 80-160/110 | 11 | 15 | | 27 | 27 | 273 | 24.5 | 21.1 | 16 | | | | | | | | | | | | | | 100x80 |
| 80-160/150 | 15 | 20 | | 32.8 | 32.6 | 32.5 | 30.2 | 27 | 22.1 | 18.5 | 16.7 | | | | | | | | | | | | 100x80 |
| 80-160/185 | 18.5 | 25 | | 39 | 38.5 | 38 | 36.7 | 33.6 | 28.8 | 253 | 23.5 | | | | | | | | | | | | 100x80 |
| 80-160/220 | 22 | 30 | | 44 | 43.5 | 43 | 41.7 | 38.6 | 33.8 | 303 | 28.5 | | | | | | | | | | | | 100x80 |
| 80-200/220 | 22 | 30 | | 48 | 47.7 | 47.5 | 43.5 | 39.2 | 32.S | 27.2 | 24.5 | | | | | | | | | | | | 100x80 |
| 80-200/300 | 30 | 40 | | 60 | 59.7 | 59.5 | 57 | 53.1 | 47 | 42.7 | 40.5 | | | | | | | | | | | | 100x80 |
| 80-250/370 | 37 | 50 | | 71.5 | 70.9 | 70.5 | 65.5 | 593 | 51 | 43.2 | 38.5 | | | | | | | | | | | | 100x80 |
| 80-250/450 | 45 | 60 | | 88 | 86.7 | 86 | 83.6 | 78.5 | 70.5 | 60 | 51 | | | | | | | | | | | | 100x80 |
| 80-250/550 | 55 | 75 | | 94.5 | 94.5 | 94.5 | 91.8 | 87 | 79.5 | 72.1 | 683 | | | | | | | | | | | | 100x80 |
| 80-315/450 | 45 | 60 | | 85 | 84 | 82.6 | 82 | 78 | 683 | 61 | 56 | | | | | | | | | | | | 100x80 |
| 80-315/550 | 55 | 75 | | 98 | 97 | 95.6 | 95 | 91 | 81.3 | 74 | 69 | | | | | | | | | | | | 100x80 |
| 80-315/7S0 | 75 | 100 | | 124 | 123 | 121.6 | 121 | 117 | 107.3 | 100 | 95 | 90 | 80.8 | | | | | | | | | | 100x80 |
| 80-315/900 | 90 | 125 | | 144 | 143 | 141.6 | 141 | 137 | 127.3 | 120 | 115 | 110 | 100.8 | | | | | | | | | | 100x80 |
| 100-160/150 | 15 | 20 | | 35 | 33.5 | 32.5 | 30 | 27.8 | 24.5 | 21.5 | 20 | 18.3 | 15 | | | | | | | | | | 125x100 |
| 100-160/185 | 18.5 | 25 | | 38.5 | 37.5 | 36.5 | 34.3 | 32.2 | 29 | 25.7 | 24 | 22 | 18 | | | | | | | | | | 125x100 |
| 100-160/220 | 22 | 30 | | 43 | 41 | 40 | 37.6 | 35.2 | 31.5 | 28.5 | 27 | 253 | 22 | | | | | | | | | | 125x100 |
| 100-200/220 | 22 | 30 | | 38.5 | 36.7 | 35.7 | 33.8 | 31.7 | 28.5 | 26.8 | 26 | 25 | 22.9 | 16.3 | 13 | | | | | | | | 125x100 |
| 100-200/300 | 30 | 40 | | 44.5 | 42.5 | 42 | 40.2 | 38.8 | 36.7 | 342 | 33 | 31.7 | 29 | 217 | 18 | | | | | | | | 125x100 |
| 100-200/370 | 37 | 50 | | 55 | S3 | 51 | 50.6 | 49.2 | 47 | 45 | 44 | 42.8 | 40.5 | 32.8 | 29 | | | | | | | | 125x100 |
| 100-250/450 | 45 | 60 | | 65 | 65 | 64 | 63 | 61 | 58 | 56 | 55 | 533 | 50 | 39 | 33.5 | | | | | | | | 125x100 |
| 100-250/550 | 55 | 75 | | 77 | 76 | 75.5 | 75 | 73.8 | 72 | 71.7 | 71.5 | 70.7 | 69 | 62.3 | 59 | | | | | | | | 125x100 |
| 100-250/750 | 75 | 100 | | 91 | 91 | 90.5 | 89.7 | 88 | 85.5 | 84 | 833 | 81.5 | 78 | 71.7 | 68.5 | 48 | | | | | | | 125x100 |
| 100-315/550 | 55 | 75 | | 80 | | | 79 | 77.4 | 75 | 74 | 73.5 | 73 | 71.3 | 68 | 66 | 60 | | | | | | | 125x100 |
| 100-315/750 | 75 | 100 | | 100 | | | 99 | 97.4 | 9S | 94 | 93.5 | 93 | 913 | 88 | 86 | 80 | | | | | | | 125x100 |
| 100-315/900 | 90 | 125 | | 118 | | | 116.5 | 114.7 | 112 | 111 | 110.8 | 110.5 | 108.7 | 106 | 104 | 98 | | | | | | | 125x100 |
| 100-315/1100 | 110 | 150 | | 138 | | | 136.5 | 134.7 | 132 | 131 | 130.8 | 130.5 | 128.7 | 126 | 124 | 118 | | | | | | | 125x100 |

| | | | | | | | | | | | | | | | | | | | | | |
|---|---|---|---|---|---|---|---|---|---|---|---|---|---|---|---|---|---|---|---|---|---|
| 125-200/450 | 45 | 60 | H(m) | 39.8 | | | 393 | 39.2 | 39 | 38.9 | 38.9 | 38.8 | 37.S | 35 | 34 | 28.6 | 25 | | | | | 150x125 |
| 125-200/550 | 55 | 75 | | 49.8 | | | 493 | 49.2 | 49 | 48.9 | 48.9 | 48.8 | 47.5 | 45 | 44 | 38.6 | 35 | | | | | 150x125 |
| 125-200/750 | 75 | 100 | | 60.8 | | | 603 | 60.2 | 60 | 59.9 | 59.9 | 59.8 | 58.5 | 56 | 55 | 49.6 | 46 | | | | | 150x125 |
| 125-250/550 | 55 | 75 | | 70 | | | 67 | 65 | 64 | 63 | 62 | 61 | 59.5 | 57 | 56 | 53 | | | | | | 150x125 |
| 125-250/750 | 75 | 100 | | 80 | | | 77 | 75 | 74 | 73 | 72 | 71 | 69.8 | 67.1 | 66.2 | 63 | 58.5 | | | | | 150x125 |
| 125-250/900 | 90 | 125 | | 87 | | | 84 | 82 | 81 | 80 | 79 | 78 | 77 | 74.5 | 73.5 | 70.2 | 65.7 | | | | | 150x125 |
| 125-250/1100 | 110 | 150 | | 97 | | | 94 | 92 | 91 | 90 | 89 | 88 | 87 | 84.6 | 83.9 | 80.4 | 76 | | | | | 150x125 |
| 125-315/900 | 90 | 125 | | 89 | | | | | | 87 | 86 | 85 | 83.7 | 81.5 | 81 | 77 | 74 | 61 | | | | 150x125 |
| 125-315/1100 | 110 | 150 | | 103 | | | | | | 101 | 100 | 99 | 97.8 | 95.5 | 95 | 91.5 | 88.2 | 75.6 | | | | 150x125 |
| 125-315/1320 | 132 | 180 | | 118 | | | | | | 116 | 115 | 114 | 112.5 | 110.5 | 1103 | 106.5 | 103.2 | 91 | | | | 150x125 |
| 125-315/1600 | 160 | 220 | | 138 | | | | | | 136.8 | 135.9 | 135 | 133.7 | 131.5 | 131 | 127.5 | 1242 | 112 | | | | 150x125 |
| 150-200/750 | 75 | 100 | | 50 | | | | | | | | 48 | 47.9 | 47.6 | 47.2 | 46.7 | 46.4 | 40.6 | 36.8 | 25.2 | | 200x150 |
| 150-200/900 | 90 | 125 | | 56 | | | | | | | | 54 | 53.9 | 53.6 | 53.2 | 52.7 | 52.4 | 48 | 42.8 | 31.2 | | 200x150 |
| 150-200/1100 | 110 | 150 | | 65.2 | | | | | | | | 62 | 61.7 | 61.2 | 60.8 | 59.8 | 59.2 | 57.2 | 54 | 46 | | 200x150 |
| 150-250/1100 | 110 | 150 | | 67 | | | | | | | | | | | 64.2 | 62 | 60.6 | 55.8 | 49.8 | 33.8 | | 200x150 |
| 150-250/1320 | 132 | 180 | | 80.2 | | | | | | | | | | | 78.2 | 76.3 | 75 | 70.6 | 6S | 50.2 | 29.8 | 200x150 |
| 150-250/1600 | 160 | 220 | | 90 | | | | | | | | | | | 88.4 | 87 | 86 | 82 | 77.2 | 62.4 | 42 | 200x150 |
| 150-315/1600 | 160 | 220 | | 92 | | | | | | | | | | | 90 | 88.3 | 87.2 | 82.8 | 76.8 | 60.4 | | 200x150 |
| 150-315/2000 | 200 | 270 | | 111 | | | | | | | | | | | 110.6 | 108.7 | 107.4 | 103.4 | 98.2 | 83.4 | 62.2 | 200x150 |
| 150-315/2500 | 250 | 340 | | 135 | | | | | | | | | | | 135.4 | 133.7 | 132.6 | 128.6 | 123.8 | 110.2 | 91 | 200x150 |

## MATERIAL DESCRIPTION / *DESCRIPCIÓNDE MATERIAL*

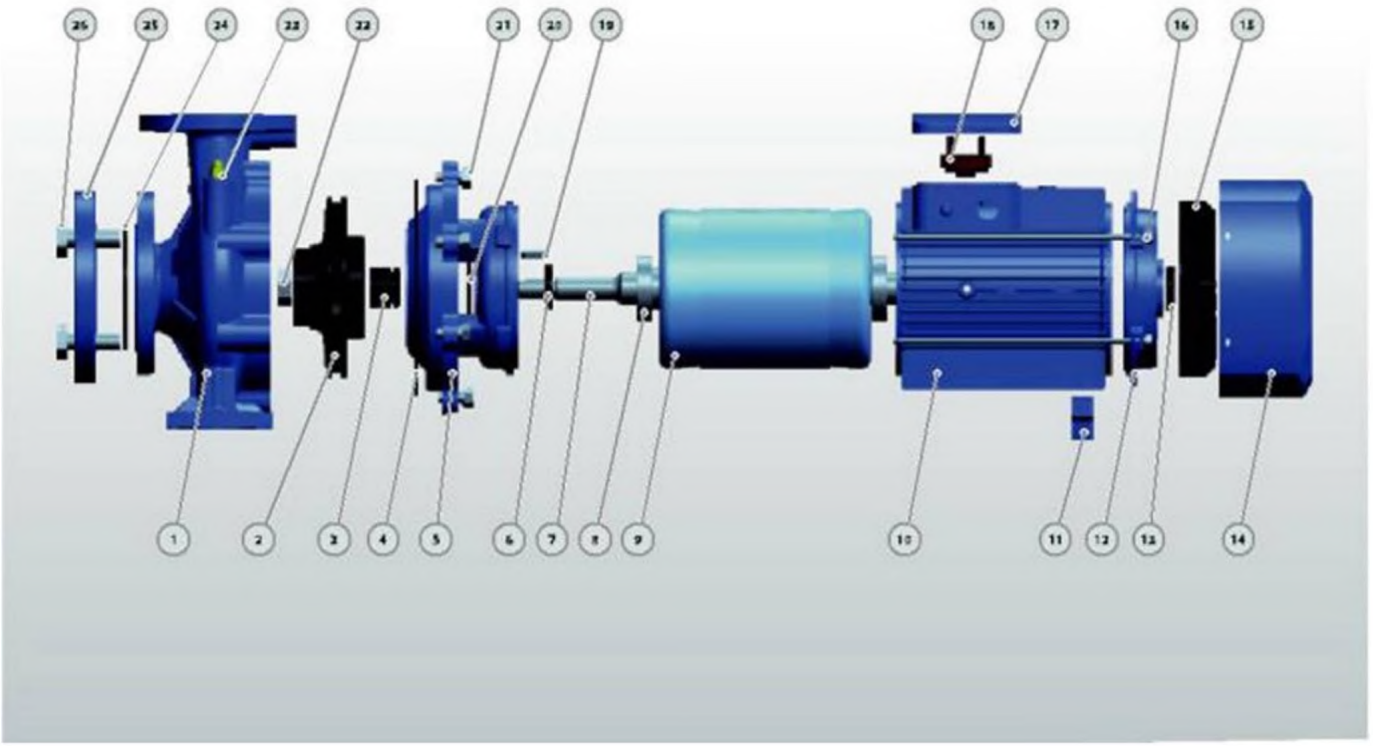

| No. | Description<br>*Descripcidn* | Material<br>*Material* | No. | Description<br>*Descripcion* | Material<br>*Material* | No. | Description<br>*Descripcion* | Material<br>*Material* |
|---|---|---|---|---|---|---|---|---|
| 1 | Pump Case<br>*Cuerpo de Bomba* | Cast iron<br>*Fundici6n* | 10 | Motor Case<br>*Cuerpo de Motor* | Aluminum<br>*Aluminio* | 19 | Impeller Key<br>*Chaveta Impulsor* | Iron<br>*Hierro* |
| 2 | Impeller<br>*Impulsor* | SS304/Cast iron<br>*Inox 304/Fundici6n* | 11 | Support Foot<br>*Soporte Pie* | Plastic<br>*PI6stico* | 20 | Water Deflector<br>*Deflector* | Rubber<br>*Caucho* |
| 3 | Mechanical Seal<br>*Cierre Mecdnico* | SiC/Carbon/SS304<br>*SiC-Grafito-Inox304* | 12 | Back Cover<br>*Tapa Trasera* | Cast iron<br>*FundiciCn* | 21 | Connection Bolt<br>*Pemo* | Steel<br>*Acero* |
| 4 | O-ring<br>*Junta T6rica* | *Rubber*<br>*Caucho* | 13 | Reinforced Seal<br>*Selto Reforzado* | Rubber<br>*Caucho* | 22 | Impeller Nut<br>*Tuerca de Impulsor* | Galvanizated Steel<br>*Acero Galvanizado* |
| 5 | Connection<br>*Conexi^n* | Cast iron<br>*Fundici6n* | 14 | Fan Cover<br>*Tapa Ventllador* | Aluminum<br>*Aluminio* | 23 | Release Valve<br>*Tapdn Cebado* | Brass<br>*Bronce* |
| 6 | Reinforced Seal<br>*Sell ◦ Reforzado* | Rubber<br>*Caucho* | 15 | Fan<br>*Ventilador* | Plastic<br>*PIAstico* | 24 | Gasket<br>*Empague* | Rubber<br>*Caucho* |
| 7 | Shaft<br>*Eje* | SS304/45# Steel<br>*Inox 304/45H Hierro* | 16 | Through Bolt<br>*Perno* | Steel<br>*Acero* | 25 | Counter Flange<br>*Contra Brida* | Galvanizated Cast iron<br>*Fundicidn Galvanizado* |
| 8 | Bearing<br>*Rodamiento* | Ball Bearing<br>Bo/a *Rodamiento* | 17 | Terminal Box<br>*Caja de Bomas* | Aluminum<br>*Aluminio* | 26 | Flange Bolt<br>*Perno de Brida* | Steel<br>*Acero* |
| 9 | Wound Stator/Rotor<br>*Estator / Rotor* | Silicon Steel/Copper<br>*Acero al Silicio/Cobre* | 18 | *Terminal Board*<br>*Tablero de Bomas* | Plastic<br>*Plistico* | | | |

## MATERIAL DESCRIPTION /DESCRIPCION DE MATERIAL

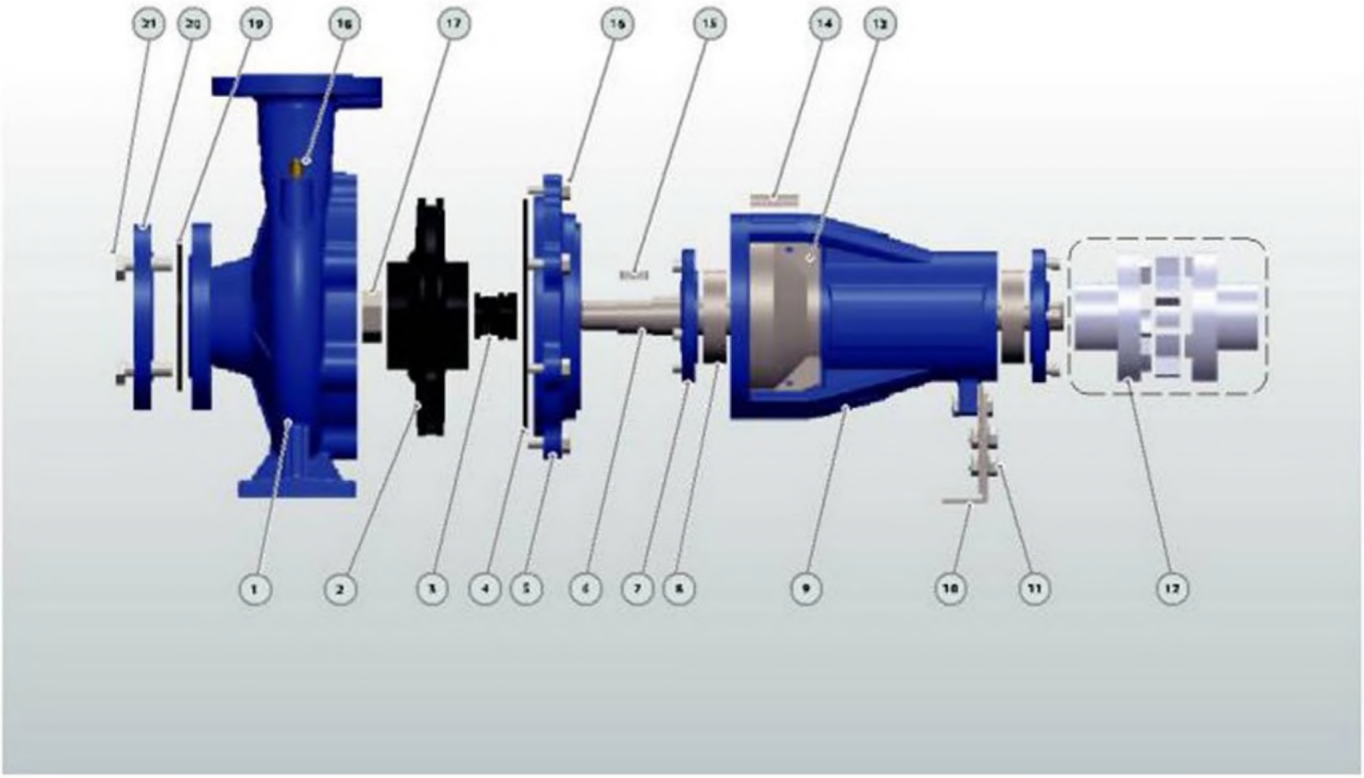

| No. | Description<br>*Doscrlpcion* | Material<br>*Material* | No. | Description<br>*Descripcion* | Material<br>*Material* | No. | Description<br>*Descripcion* | Material<br>*Material* |
|---|---|---|---|---|---|---|---|---|
| 1 | Pump Case<br>*Cuerpo de Bomba* | Cast iron<br>*Fundici6n* | 8 | Bearing<br>*Rodamiento* | Ball Bearing<br>*Bota Rodamiento* | 15 | Impeller Key<br>*Chaveta Impulsor* | Iron<br>*Hierro* |
| 2 | Impeller<br>*Impulse* | SSMM/Casl iron<br>*Inox 304/Fundici6n* | 9 | Support Case<br>*Cuerpo Soporte* | Cast iron<br>*Fundici6n* | 16 | Connection Boll<br>*Pemo* | Steel<br>*Acero* |
| 3 | Mechanical Seal<br>*Cierre Mecinico* | SiC/Cart>on/SS304<br>*SiC-Grafito-ln<>x304* | 10 | Support Foot<br>*Soporte Pie* | Iron<br>*Hierro* | 17 | Impeller Nut<br>*Tuercs de Impulsor* | Galvanizated Steel<br>*Acero Galvsnizedo* |
| 4 | O-ring<br>*Junta T6rica* | *Rubber*<br>*Caucho* | 11 | Foot Bolt<br>*Pemo* | Steel<br>*Acero* | 18 | Release Valve<br>*Tap^n Cebado* | Brass<br>*Bronce* |
| 5 | Connection<br>*Conexibn* | Cast iron<br>*Fundici6n* | 12 | CoupRng(Oplional)<br>*Uni6n(Opcional)* | Steel<br>*Acero* | 19 | Gasket<br>*Empague* | Rubber<br>*Caucho* |
| 6 | Shaft<br>*Eje* | SS304/45# Steel<br>*Inox 304/45n Hierro* | 13 | Case Cover<br>*Tape Cuerpo* | SS304<br>*Inox3O4* | 20 | Counter Flange<br>*Contra Brida* | Galvanizated Cast iron<br>*Fundici^n Gatvanizado* |
| 7 | Bearing Cover<br>*Taps Rodamiento* | Cast iron<br>*Fundici6n* | 14 | Nameplate<br>*Letrero* | Aluminum<br>*Aluminio* | 21 | Flange Bolt<br>*Pemo de Brida* | Steel<br>*Acero* |

## Product Specification (60HZ)


**NEW/NUEVO**

### TECHNICAL DESCRIPTION

■ New EN733 standard centrifugal pump
-Original design by PURITY (patented)
■ Both square motor & round motor available
-YE3 high efficient motor, with protection IP55 class F
-Pump case with anti-corrosive coating
■Impeller in stainless steel AISI 304 or cast iron
■ Shaft in stainless steel AISI 304 or galvanized iron
■ Galvanized counter flange with bolts, nuts and gaskets
• Quality NSK bearing, wear resistance mechanical seal

### APPLICATIONS

■ Suitable for use with clean water and liquids that are not chemically
■ aggressive towards the materials from which the pump is made.
■ The EN733 centrifugal pumps are recommended for use in water supply,
■ cleaning sets, pressure boosting, firefighting sets, irrigation, industrial
■ applications, water circulation in climatisation sets, agricultural.

### USING LIMITS

■ Liquid temperature between -10°C and +120°C
■ Ambient temperature up to +50°C
■ Max. working pressure 16 bar
■ Continuous service S1

### PATENTS

-Registered model PST
-Registered Patent Design n 201530478502.0

| **DISCHARGE SIZE** *DE DESCARGA* | **IMPELLER SIZE** *DEL IMPULSOR* | | | | | | |
|---|---|---|---|---|---|---|---|
| | **125** | **160** | **200** | **250** | **250D** | **315** | **400** |
| **32** | SS304 | SS304 | SS304 | Cast iron | SS304 | | |
| **40** | Cast iron | Cast iron | SS304 | Cast iron | / | | |
| **50** | Cast iron | Cast iron | Cast iron | Cast iron | / | | |
| **65** | Cast iron | Cast iron | Cast iron | Cast iron | / | Cast iron | |
| **80** | Cast iron | Cast iron | Cast iron | Cast iron | / | Cast iron | Cast iron |
| **100** | | Cast iron | Cast iron | Cast iron | / | Cast iron | Cast iron |
| **125** | | | Cast iron | Cast iron | / | Cast iron | Cast iron |
| **150** | | | Cast iron | Cast iron | / | Cast iron | Cast iron |
| **200** | | | | Cast iron | / | Cast iron | Cast iron |
| **250** | | | | | / | Cast iron | Cast iron |

## TECHNICAL DATA / *DATOS T^CNICOS*

**60 HZ n=35001/min**

| MODEL *MODELO* | Power *Potencia* | | US gpm | Q=DEUVERY/*CAUDAL* | | | | | | | | | | | | | | | | | | | | DN |
|---|---|---|---|---|---|---|---|---|---|---|---|---|---|---|---|---|---|---|---|---|---|---|---|---|
| | | | | 0 | 26 | 40 | 66 | 79 | 106 | 119 | 159 | 185 | 211 | 238 | 317 | 370 | 396 | 476 | 529 | 608 | 793 | 925 | | |
| | | | l/min | 0 | 100 | 150 | 250 | 300 | 400 | 450 | 600 | 700 | 800 | 900 | 1200 | 1400 | 1500 | 1800 | 2000 | 2300 | 3000 | 3500 | | |
| | kw | hp | m'/h | 0 | 6 | 9 | 15 | 18 | 24 | 27 | 36 | 42 | 48 | 54 | 72 | 84 | 90 | 108 | 120 | 138 | 180 | 210 | | mm |
| 32-125/07 o | 0.75 | 1 | | 17.5 | 16.7 | 15 | 12 | 9 | | | | | | | | | | | | | | | | 50x32 |
| 32-125/11 o | LI | L5 | | 22 | 21 | 19.7 | 16.5 | 14.5 | 9 | | | | | | | | | | | | | | | 50x32 |
| 32-160/15 • | L5 | 2 | | 25.4 | 23.7 | 225 | 18.5 | 15.8 | | | | | | | | | | | | | | | | 50x32 |
| 32-160/22 • | 22 | 3 | | 31 | 29.6 | 28.5 | 24.5 | 22 | 15 | | | | | | | | | | | | | | | 50x32 |
| 32-160/30 • | 3 | 4 | | 35 | 34.3 | 34 | 28 | 25.5 | 19 | 15 | | | | | | | | | | | | | | 50x32 |
| 32-200/30 • | ***3*** | 4 | | 44.2 | 43 | 39.8 | 35.2 | 32.2 | 24.6 | 19.8 | | | | | | | | | | | | | | 50x32 |
| 32-200/40 • | 4 | 5.5 | | 54.5 | 52 | 50 | 45.5 | 4L9 | 35 | 30.3 | | | | | | | | | | | | | | 50x32 |
| 32-250/55 • | 5.5 | 7.5 | | 60 | 59.5 | 59 | 55 | 53 | 49 | 46 | | | | | | | | | | | | | | 50x32 |
| 32-250/75 • | 7.5 | 10 | | 75 | 74.5 | 74.3 | 73.5 | 72.5 | 68.5 | 67.3 | 60 | | | | | | | | | | | | | 50x32 |
| 32-250/110 • | 11 | 15 | | 90 | 87.5 | 85.8 | 82 | 79 | 75 | 72 | 65 | | | | | | | | | | | | | 50x32 |
| 32-250/55Do | 5.5 | 7.5 | | 79.5 | 77 | 74 | 70 | 66 | 54 | 42 | | | | | | | | | | | | | | 50x32 |
| 32-250/75DO | 7.5 | 10 | | 95 | 93 | 91 | 87 | 83 | 75 | 70 | 32 | | | | | | | | | | | | | 50x32 |
| 40-125/11 o | LI | L5 | | 14.7 | | | | 13.5 | 11.5 | 10.1 | 5.8 | | | | | | | | | | | | | 65x40 |
| 40-125/15 o | L5 | 2 | | 18.1 | | | | 17 | 15 | 13.9 | 9.6 | 6 | | | | | | | | | | | | 65x40 |
| 40-125/22 © | ***2.2*** | 3 | | 24.5 | | | | 23.2 | 21.5 | 20.2 | 16 | 13 | 83 | | | | | | | | | | | 65x40 |
| 40-160/30 • | ***3*** | 4 | | 3L8 | | | | 29.5 | 275 | 26.3 | 2L5 | 17.5 | | | | | | | | | | | | 65x40 |
| 40 160/40 • | 4 | 5.5 | | 38 | | | | 36 | 34 | 33 | 28.5 | 25 | 20.1 | | | | | | | | | | | 65x40 |
| 40-200/55 • | 5.5 | 7.5 | | 46 | | | | 43.8 | 413 | 40.1 | 35 | 30 | | | | | | | | | | | | 65x40 |
| 40-200/75 • | 7.5 | 10 | | 57 | | | | 53.6 | 51.5 | 50 | 45 | 41 | 36.5 | | | | | | | | | | | 65x40 |
| 40-250/92 • | 9.2 | 12.5 | | 64 | | | | 59 | 56.5 | 55 | 49.5 | 45 | 39.8 | | | | | | | | | | | 65x40 |
| 40-250/110 • | 11 | 15 | | 78 | | | | 75 | 73 | 72 | 67 | 63 | 56 | 43 | | | | | | | | | | 65x40 |
| 40-2S0/150 • | 15 | 20 | | 88.5 | | | | 83.5 | 80.5 | 79 | 74 | 70.5 | 65 | 52 | | | | | | | | | | 65x40 |
| 50-125/22 • | 22 | 3 | | 17 | | | | | | | 15.4 | 14 | 12.8 | 1L5 | 6.5 | | | | | | | | | 65x50 |
| 50-125/30 • | 3 | 4 | | 20 | | | | | | | 18.8 | 18 | 17 | 15.6 | 11 | | | | | | | | | 65x50 |
| 50 -125/40 • | 4 | 5.5 | | 24 | | | | | | | 23.1 | 23 | 2L5 | 20.3 | 15.8 | 1L8 | | | | | | | | 65x50 |
| 50-160/55 • | 5.5 | 7.5 | H(m) | 32 | | | | | | | 30.6 | 30 | 28 | 26.6 | 20.5 | 14.8 | | | | | | | | 65x50 |
| 50160/75 • | 7.5 | 10 | | 40 | | | | | | | 38 | 37 | 36 | 34.4 | 29 | 24 | 21 | | | | | | | 65x50 |
| 50-200/92 • | 9.2 | 12.5 | | 50.5 | | | | | | | 46.8 | 45 | 43 | 40.9 | 32.5 | 26.7 | | | | | | | | 65x50 |
| 50-200/110 • | 11 | 15 | | 57.5 | | | | | | | 53.5 | 52 | 50 | 47.5 | 40 | 34 | 29 | | | | | | | 65x50 |
| 50-200/1S0 • | 15 | 20 | | 62 | | | | | | | 58 | 56.5 | 54.5 | 52 | 44.5 | 39 | 35.5 | | | | | | | 65x50 |
| 50-250/150 • | 15 | 20 | | 68.5 | | | | | | | 64 | 63 | 6L5 | 59 | 50 | 41 | | | | | | | | 65x50 |
| 50-250/185 • | 18.5 | 25 | | 79 | | | | | | | 75.8 | 74.8 | 74 | 71.5 | 63.5 | 55.5 | 47 | | | | | | | 65x50 |
| 50-250/220 • | 22 | 30 | | 89.5 | | | | | | | 86 | 85.3 | 84 | 8L5 | 73.5 | 65.5 | 57 | | | | | | | 65x50 |
| 65-125/40 • | 4 | 5.5 | | 19 | | | | | | | | | 173 | 16.8 | 14.5 | 13 | 1L8 | | | | | | | 80x65 |
| 65-125/55 • | 5.5 | 7.5 | | 23 | | | | | | | | | 2L3 | 20.9 | 19 | 17.5 | 16.7 | 13.7 | | | | | | 80x65 |
| 65-125/75 • | 7.5 | 10 | | 27 | | | | | | | | | 26 | 25.6 | 24.5 | 23 | 22.5 | 20 | 18 | | | | | 80x65 |
| 65-160/92 • | 9.2 | 12.5 | | 33 | | | | | | | | | | 3L5 | 30 | 28 | 27.1 | 24 | 2L5 | | | | | 80x65 |
| 65-160/110* | 11 | 15 | | 36 | | | | | | | | | | 34.5 | 33 | 3L5 | 30.8 | 28 | 25.5 | | | | | 80x65 |
| 65-160/150 • | 15 | 20 | | 42 | | | | | | | | | | 41 | 40 | 38.5 | 37.8 | 35 | 33 | 29.5 | | | | 80x65 |
| 65-200/150 • | 15 | 20 | | 45 | | | | | | | | | | 45.5 | 43 | 41 | 40.2 | 36.5 | 34 | | | | | 80x65 |
| 65-200/185 • | 18.5 | 25 | | 52 | | | | | | | | | | 523 | 51 | 49 | 48.2 | 44.5 | 42 | | | | | 80x65 |
| 65-200/220 • | 22 | 30 | | 59 | | | | | | | | | | 59.5 | 58 | 56 | 55 | 52 | 49.5 | 44.5 | | | | 80x65 |
| 65-250/220 • | 22 | 30 | | 64.8 | | | | | | | | | | 64.7 | 62 | 60 | 58.5 | 53 | 50 | | | | | 80x65 |
| 65-250/300 • | 30 | 40 | | 80 | | | | | | | | | | 79.8 | 77.5 | 75.5 | 74.5 | 70 | 66 | 58 | | | | 80x65 |
| 65-250/370 • | 37 | 50 | | 92 | | | | | | | | | | 90.5 | 88.5 | 87 | 85 | 80.5 | 78 | 68 | | | | 80x65 |
| 65-315/370 • | 37 | 50 | | 102 | | | | | | | | | | 99.2 | 97 | 95 | 94.5 | 924 | 90 | 83 | | | | 80x65 |
| 65-315/450 • | 45 | 60 | | 112 | | | | | | | | | | 109.2 | 107.7 | 105.8 | 104.5 | 102.5 | 100 | 93 | 66 | | | 80x65 |
| 65-315/550 • | 55 | 75 | | 122 | | | | | | | | | | 119.2 | 117.4 | 115.7 | 114.5 | 112.5 | 110 | 103 | 76 | | | 80x65 |
| 65-315/750 • | 75 | 100 | | 141 | | | | | | | | | | 139.8 | 137.3 | 135.6 | 134.5 | 132.5 | 130 | 122 | 96 | 65.5 | | 80x65 |
| 80 -125/40 • | 4 | 5.5 | | 17 | | | | | | | | | 16.5 | 15.9 | 14.3 | 13.5 | 1L6 | 10 | 75 | | | | | 100x80 |
| 80-125/55 • | 5.5 | 7.5 | | 21 | | | | | | | | | 20.5 | 20 | 19 | 18 | 16.5 | 15 | 125 | 9.5 | | | | 100x80 |
| 80-125/75 • | 7.5 | 10 | | 26 | | | | | | | | | 25 | 25 | 24.5 | 23.8 | 225 | 2L5 | 19.5 | 16.5 | | | | 100x80 |

**° = PST available ᵉ =PS available · =PST&PS available/drspo/wb/e**

## TECHNICAL DATA / *DATOS T^CNICOS*

**60 HZ n=35001/min**

| MODEL *MODELO* | Power *Potencia* | | us gpm | Q=DELIVERY/C>4(/D>4£ | | | | | | | | | | | | | | | | | | DN |
|---|---|---|---|---|---|---|---|---|---|---|---|---|---|---|---|---|---|---|---|---|---|---|
| | | | | 0 | 264 | 396 | 529 | 634 | 793 | 881 | 925 | 969 | 1057 | 1233 | 1322 | 1586 | 1762 | 2203 | 2643 | 3524 | 4405 | |
| | | | l/min | 0 | 1000 | 1500 | 2000 | 2400 | 3000 | 3333 | 3500 | 3666 | 4000 | 4666 | 5000 | 6000 | 6666 | 8333 | 10000 | 13333 | 16666 | |
| | kw | hp | $m^5/h$ | 0 | 60 | 90 | 120 | 144 | 180 | 200 | 210 | 220 | 240 | 280 | 300 | 360 | 400 | 500 | 600 | 800 | 1000 | mm |
| 80-160/110 • | 11 | 15 | | 27 | 27 | 273 | 24.5 | 2L1 | 16 | | | | | | | | | | | | | 100x80 |
| 80-160/150 • | 15 | 20 | | 32.8 | 32.6 | 325 | 302 | 27 | 221 | 18.5 | 16.7 | | | | | | | | | | | 100x80 |
| 80-160/185 • | 18.5 | 25 | | 39 | 385 | 38 | 36.7 | 33.6 | 28.8 | 253 | 23.5 | | | | | | | | | | | 100x80 |
| 80-160/220 • | 22 | 30 | | 44 | 43.5 | 43 | 41.7 | 38.6 | 33.8 | 303 | 28.5 | | | | | | | | | | | 100x80 |
| 80-200/220 • | 22 | 30 | | 48 | 47.7 | 475 | 435 | ***39.2*** | 325 | 272 | 24.5 | | | | | | | | | | | 100x80 |
| 80-200/300 • | 30 | 40 | | 60 | 59.7 | 59.5 | 57 | ***53.1*** | 47 | 42.7 | 40.5 | | | | | | | | | | | 100x80 |
| 80-250/370 • | 37 | 50 | | 7L5 | 70.9 | 70.5 | 65.5 | ***59.3*** | 51 | 432 | 38.5 | | | | | | | | | | | 100x80 |
| 80-250/450 • | 45 | 60 | | 88 | 86.7 | 86 | 83.6 | 78.5 | 70.5 | 60 | 51 | | | | | | | | | | | 100x80 |
| 80-250/550 • | 55 | 75 | | 94.5 | 94.5 | 94.5 | 91.8 | 87 | 79.5 | 72.1 | 683 | | | | | | | | | | | 100x80 |
| 80-315/450 • | 45 | 60 | | 85 | 84 | 826 | 82 | 78 | 683 | 61 | 56 | | | | | | | | | | | 100x80 |
| 80-315/550 • | 55 | 75 | | 98 | 97 | 95.6 | 95 | 91 | 8L3 | 74 | 69 | | | | | | | | | | | 100x80 |
| 80-315/750 • | 75 | 100 | | 124 | 123 | 12L6 | 121 | 117 | 1073 | 100 | 95 | 90 | 80.8 | | | | | | | | | 100x80 |
| 80-315/900 • | 90 | 125 | | 144 | 143 | 14 L6 | 141 | 137 | 127.3 | 120 | 115 | 110 | 1003 | | | | | | | | | 100x80 |
| 100-160/150 • | 15 | 20 | | 35 | 335 | 325 | 30 | 27.8 | 24.5 | 21.5 | 20 | 183 | 15 | | | | | | | | | 125x100 |
| 100-160/185 • | 18.5 | 25 | | 38.5 | 375 | 36.5 | 343 | ***32.2*** | 29 | 25.7 | 24 | 22 | 18 | | | | | | | | | 125x100 |
| 100-160/220 • | 22 | 30 | | 43 | 41 | 40 | 37.6 | ***35.2*** | 3L5 | 28.5 | 27 | 253 | 22 | | | | | | | | | 125x100 |
| 100-200/220 • | 22 | 30 | | 38.5 | 36.7 | 35.7 | ***333*** | ***3L7*** | 28.5 | 26.8 | 26 | 25 | 22.9 | 163 | 13 | | | | | | | 125x100 |
| 100-200/300 • | 30 | 40 | | 44.5 | 42.5 | 42 | ***402*** | ***38.8*** | ***36.7*** | 342 | 33 | 3L7 | 29 | 2L7 | 18 | | | | | | | 125x100 |
| 100-200/370 • | 37 | 50 | | 55 | 53 | 51 | 50.6 | ***49.2*** | ***47*** | 45 | 44 | 42.8 | 405 | 328 | 29 | | | | | | | 125x100 |
| 100-250/450 • | 45 | 60 | | 65 | 65 | 64 | 63 | 61 | 58 | 56 | 55 | ***53.3*** | 50 | 39 | 33.5 | | | | | | | 125x100 |
| 100-250/550 • | 55 | 75 | | 77 | 76 | 75.5 | 75 | 73.8 | 72 | 71.7 | 7L5 | ***70.7*** | 69 | 623 | 59 | | | | | | | 125x100 |
| 100-250/750 • | 75 | 100 | | 91 | 91 | 90.5 | 89.7 | 88 | 85.5 | 84 | 833 | 8L5 | 78 | 7L7 | 68.5 | 48 | | | | | | 125x100 |
| 100-315/550 • | 55 | 75 | | 80 | | | 79 | 77.4 | 75 | 74 | 73.5 | 73 | 713 | 68 | 66 | 60 | | | | | | 125x100 |
| 100-315/750 • | 75 | 100 | H(m) | 100 | | | 99 | 97.4 | 95 | 94 | 93.5 | 93 | 913 | 88 | 86 | 80 | | | | | | 125x100 |
| 100-315/900 • | 90 | 125 | | 118 | | | 1165 | 114.7 | 112 | 111 | 110.8 | 110.5 | 108.7 | 106 | 104 | 98 | | | | | | 125x100 |
| 100-315/1100 • | 110 | 150 | | 138 | | | 136.5 | 134.7 | 132 | 131 | 130.8 | 130.5 | 128.7 | 126 | 124 | 118 | | | | | | 125x100 |
| 125-200/450 • | 45 | 60 | | 39.8 | | | 393 | 39.2 | 39 | 38.9 | 38.9 | 38.8 | 37.5 | 35 | 34 | 28.6 | 25 | | | | | 150x125 |
| 125-200/550 • | 55 | 75 | | 49.8 | | | 493 | 49.2 | 49 | 48.9 | 48.9 | 48.8 | 47.5 | 45 | 44 | 38.6 | 35 | | | | | 150x125 |
| 125-200/750 • | 75 | 100 | | 60.8 | | | 603 | 60.2 | 60 | 59.9 | 59.9 | 59.8 | 58.5 | 56 | 55 | 49.6 | 46 | | | | | 150x125 |
| 125-250/550 · | 55 | 75 | | 70 | | | 67 | 65 | 64 | 63 | 62 | 61 | 59.5 | 57 | 56 | 53 | | | | | | 150x125 |
| 125-250/750 • | 75 | 100 | | 80 | | | 77 | 75 | 74 | 73 | 72 | 71 | 69.8 | 67.1 | 66.2 | 63 | 58.5 | | | | | 150x125 |
| 125-250/900 • | 90 | 125 | | 87 | | | 84 | 82 | 81 | 80 | 79 | 78 | 77 | 74.5 | 73.5 | 702 | 65.7 | | | | | 150x125 |
| 125-250/1100 · | 110 | 150 | | 97 | | | 94 | 92 | 91 | 90 | 89 | 88 | 87 | 84.6 | 83.9 | 80.4 | 76 | | | | | 150x125 |
| 125-315/900 • | 90 | 125 | | 89 | | | | | | 87 | 86 | 85 | 83.7 | 8L5 | 81 | 77 | 74 | 61 | | | | 150x125 |
| 125-315/1100 • | 110 | 150 | | 103 | | | | | | 101 | 100 | 99 | 973 | 95.5 | 95 | 91.5 | 88.2 | 75.6 | | | | 150x125 |
| 125-315/1320 • | 132 | 180 | | 118 | | | | | | 116 | 115 | 114 | 1125 | 110.5 | 110.3 | 106.5 | 103.2 | 91 | | | | 150x125 |
| 125-315/1600 • | 160 | 220 | | 138 | | | | | | ***136B*** | 135.9 | 135 | 1337 | 131.5 | 131 | 127.5 | 124.2 | 112 | | | | 150x125 |
| 150-200/750 • | 75 | 100 | | 50 | | | | | | | | 48 | 47.9 | 47.6 | 47.2 | 46.7 | 46.4 | 40.6 | 363 | 252 | | 200x150 |
| 150-200/900 • | 90 | 125 | | 56 | | | | | | | | 54 | 53.9 | 53.6 | 53.2 | 52.7 | 524 | 48 | 423 | ***312*** | | 200x150 |
| 150-200/1100 • | 110 | 150 | | 65.2 | | | | | | | | 62 | 61.7 | 6L2 | 60.8 | 593 | 59.2 | 572 | S4 | ***46*** | | 200x150 |
| 150-250/1100 · | 110 | 150 | | 67 | | | | | | | | | | | 64.2 | 62 | 60.6 | 55.8 | 493 | 333 | | 200x150 |
| 150-250/1320 • | 132 | 180 | | 80.2 | | | | | | | | | | | 78.2 | 763 | 75 | 70.6 | 65 | 502 | 29.8 | 200x150 |
| 150-250/1600 · | 160 | 220 | | 90 | | | | | | | | | | | 88.4 | 87 | 86 | 82 | ***772*** | 62.4 | 42 | 200x150 |
| 150-315/1600 • | 160 | 220 | | 92 | | | | | | | | | | | 90 | 883 | 87.2 | 82.8 | 763 | 60.4 | | 200x150 |
| 150-315/2000 • | 200 | 270 | | 111 | | | | | | | | | | | 110.6 | 108.7 | 107.4 | 103.4 | 982 | 83.4 | 622 | 200x150 |
| 150-315/2500 • | 250 | 340 | | 135 | | | | | | | | | | | 135.4 | 133.7 | 132.6 | 128.6 | 123.8 | 1102 | 91 | 200x150 |

**• =PS available · = PST&PS *availabke/disponible***

## TECHNICAL DATA / *DATOS T^CNICOS*

**60 HZ n=17501/min**

| MODEL *MODELO* | Power *Pnt^nria* kw | hp | us gpm | Q=DELIVERY/C>ia£M£ | | | | | | | | | | | | | | | | | | DN |
|---|---|---|---|---|---|---|---|---|---|---|---|---|---|---|---|---|---|---|---|---|---|---|
| | | | | 0 | 106 | 119 | 132 | 159 | 185 | 198 | 220 | 264 | 317 | 370 | 396 | 423 | 476 | 617 | 661 | 881 | 1101 | |
| | | | l/min | 0 | 400 | 450 | 500 | 600 | 700 | 750 | 833 | 1000 | 1200 | 1400 | 1500 | 1600 | 1800 | 2333 | 2500 | 3333 | 4166 | |
| | | | m³/h | 0 | 24 | 27 | 30 | 36 | 42 | 45 | 50 | 60 | 72 | 84 | 90 | 96 | 108 | 140 | 150 | 200 | 250 | mm |
| 65-160/11 • | LI | L5 | | 8 | 7.5 | 7A | 73 | 7 | 6.6 | 63 | 5.8 | 43 | 3.4 | | | | | | | | | 80x65 |
| 65-160/15 · | 15 | 2 | | 9 | 8.5 | 8.4 | 83 | 8 | 7.6 | 7.4 | 6.9 | 6 | 4.6 | | | | | | | | | 80x65 |
| 65-160/22 • | 22 | 3 | | 103 | 9.9 | 9.9 | 93 | 9.5 | 9.2 | 9 | 8.6 | 73 | 6.5 | 5 | | | | | | | | 80x65 |
| 65-200/15 • | 15 | 2 | | 10 | | | 9.6 | 9.1 | 8.5 | 8.2 | 7.6 | 6.4 | 4.6 | | | | | | | | | 80x65 |
| 65-200/22 • | 22 | 3 | | 12.4 | | | 122 | 11.8 | 113 | 11 | 10.4 | 93 | 7.6 | | | | | | | | | 80x65 |
| 65-200/30 • | 3 | 4 | | 14.4 | | | 143 | 133 | 13.4 | 13.1 | 125 | 113 | 9.6 | 7.S | | | | | | | | 80x65 |
| 65-250/30 • | 3 | 4 | | 15.4 | | | 14.6 | 13.9 | 13.1 | 126 | 1L6 | 9.7 | 6.7 | | | | | | | | | 80x65 |
| 65-250/40 • | 4 | 5.5 | | 19 | | | 183 | 173 | 17.2 | 16.9 | 16.1 | 14.4 | 1L7 | | | | | | | | | 80x65 |
| 65-250/55 • | 5.5 | 7.5 | | 223 | | | 213 | 20.9 | 20.3 | 19.9 | 19.2 | 17.7 | 15.1 | 12 | | | | | | | | 80x65 |
| 65-315/40 ♦ | 4 | 5.5 | | 18.6 | | | 173 | 173 | 16.7 | 16.2 | 15.2 | 133 | | | | | | | | | | 80x65 |
| 65-315/55 • | 5.5 | 7.5 | | 221 | | | | 212 | 20.6 | 20.2 | 19.2 | 173 | 14 | | | | | | | | | 80x65 |
| 65-315/75 · | 7.5 | 10 | | 26.5 | | | | 25.6 | 25.2 | 24.9 | 243 | 23 | 20.8 | 17.6 | | | | | | | | 80x65 |
| 65-315/110 • | 11 | 15 | | 34.8 | | | | 342 | 33.9 | 33.7 | 33.2 | 321 | 30.2 | 27.4 | 25.6 | 23.7 | 18.7 | | | | | 80x65 |
| 80-160/15 • | L5 | 2 | | 72 | | | | | | 7.1 | 6.9 | 6.4 | 5.5 | 4.6 | 4.1 | 3.5 | | | | | | 100x80 |
| 80-160/22 • | 2.2 | 3 | | 8.5 | | | | | | 8.6 | 8.4 | 8 | 7.4 | 6.6 | 62 | 5.7 | 5 | | | | | 100x80 |
| 80-200/30 • | 3 | 4 | | 1L2 | | | | | | 11 | 10.7 | 10.1 | 9.2 | 8 | 73 | 6.6 | | | | | | 100x80 |
| 80-200/40 • | 4 | 5.5 | | 13.8 | | | | | | 13.8 | 13.6 | 133 | 124 | 1L3 | 10.7 | 10 | 9 | | | | | 100x80 |
| 80-250/40 • | 4 | 5.5 | | 16.5 | | | | | | 16 | 15.6 | 143 | 13.2 | 1L4 | 102 | 9 | | | | | | 100x80 |
| 80-250/55 · | 5.5 | 7.5 | | 19.8 | | | | | | 19.5 | 19.1 | 18.4 | 17.2 | 15.5 | 14.5 | 13.5 | 1L1 | | | | | 100x80 |
| 80-250/75 • | 7.S | 10 | | 23.6 | | | | | | 23.5 | 23.2 | 225 | 213 | 19.9 | 19 | 18.1 | 16 | | | | | 100x80 |
| 80-250/110 • | 11 | 15 | | 27.6 | | | | | | 27.5 | 27.2 | 26.5 | 253 | 23.9 | 23 | 221 | 20 | 15 | | | | 100x80 |
| 80-315/55 • | 5.5 | 7.5 | | 19.7 | | | | | | 19.1 | 18.8 | 18.1 | 16.8 | 15 | 13.9 | 12.8 | 10.1 | | | | | 100x80 |
| 80-315/75 • | 7.5 | 10 | H(m) | 24.6 | | | | | | 23.9 | 23.6 | 23 | 2L9 | 20.4 | 195 | 18.6 | 163 | | | | | 100x80 |
| 80-315/110 • | 11 | 15 | | 29.9 | | | | | | 29.4 | 29.2 | 283 | 28.1 | 27 | 263 | 25.5 | 23.6 | 16.5 | 13.5 | | | 100x80 |
| 80-315/150 • | 15 | 20 | | 36.8 | | | | | | 36.4 | 36.1 | 35.6 | 34.7 | 33.6 | 33 | 324 | 30.9 | 253 | 23 | | | 100x80 |
| 80-400/185 • | 18.5 | 25 | | 403 | | | | | | 39.7 | 39.5 | 39.1 | 38.4 | 37.3 | 36.6 | 35.9 | 34.1 | 273 | 24.5 | | | 100x80 |
| 80-400/220 • | 22 | 30 | | 45.1 | | | | | | 44.6 | 44.5 | 442 | 43.6 | 426 | 42 | 4L4 | 39.8 | 33.4 | 30.7 | | | 100x80 |
| 80*400/300 • | 30 | 40 | | 55.1 | | | | | | 54.7 | 54.6 | 54.4 | 54 | 533 | 52.8 | 522 | 50.9 | 45.4 | 432 | | | 100x80 |
| 100-160/22 • | 22 | 3 | | 5S | | | | | | 5.8 | 5.7 | 55 | 53 | 5 | 4.9 | 4.6 | 4.3 | | | | | 125x100 |
| 100" 160/30 • | 3 | 4 | | 82 | | | | | | 8.1 | 8 | 7.9 | 7.6 | 7.3 | 72 | 6.9 | 6.5 | 5.1 | | | | 125x100 |
| 100-160/40 • | 4 | 5.5 | | 10 | | | | | | 10 | 9.9 | 9.7 | 9.4 | 9.1 | 9 | 8.7 | 8.3 | 6.9 | 63 | | | 125x100 |
| 100-200/40 • | 4 | 5.5 | | 11.8 | | | | | | 1L7 | 1L6 | 11.4 | 11 | 10.5 | 103 | 9.7 | 9.1 | 63 | 5.9 | | | 125x100 |
| 100-200/55 • | 5.5 | 7.5 | | 14.8 | | | | | | 14.7 | 14.7 | 14.5 | 14.2 | 13.9 | 133 | 13.5 | 13 | 111 | 103 | | | 125x100 |
| 100-250/55 • | 5.5 | 7.5 | | 15.9 | | | | | | 15.8 | 15.7 | 15.5 | 14.9 | 14.4 | 14.1 | 13.4 | 12.5 | 92 | 7.9 | | | 125x100 |
| 100-250/75 • | 7.5 | 10 | | 19.5 | | | | | | 19.5 | 19.4 | 192 | 18.8 | 183 | 18.1 | 17.6 | 16.9 | 14 | 12.7 | | | 125x100 |
| 100-250/110 • | 11 | 15 | | 24.3 | | | | | | 24.3 | 24.2 | 24.1 | 23.7 | 23.3 | 23.1 | 22.7 | 22.1 | 19.7 | 18.6 | 1L4 | | 125x100 |
| 100-250/150 • | 15 | 20 | | 2T8 | | | | | | 27.8 | 27.7 | 27.6 | 27.2 | 26.8 | 26.6 | 26.2 | 25.6 | 232 | 221 | 14.9 | | 125x100 |
| 100-315/150 • | 15 | 20 | | 29.9 | | | | | | | 29.7 | 29.5 | 29.1 | 28.8 | 28.6 | 28.1 | 27.5 | 25 | 24 | 16.8 | | 125x100 |
| 100-315/185 • | 18.5 | 25 | | 35 | | | | | | | 34.4 | 342 | 33.8 | 33.5 | 333 | 328 | 32.2 | 30 | 29 | 224 | | 125x100 |
| 100-315/220· | 22 | 30 | | 37 | | | | | | | 36.8 | 36.7 | 36.4 | 36.1 | 35.9 | 35.5 | 35.1 | 332 | 32.4 | 26.6 | | 125x100 |
| 100-315/300 • | 30 | 40 | | 42 | | | | | | | 4L8 | 41.7 | 4L4 | 4L1 | 40.9 | 40.5 | 40.1 | 382 | 37.4 | 3L6 | | 125x100 |
| 100-400/300 • | 30 | 40 | | 46.4 | | | | | | | | 46 | 46 | 46 | 46 | 45 | 44 | 42 | 40 | 29.6 | | 125x100 |
| 100-400/370 • | 37 | 50 | | 5L8 | | | | | | | | 513 | 5L2 | 5L1 | 51 | 50.5 | 49.5 | 475 | 46 | 37.3 | | 125x100 |
| 100-400/450 · | 45 | 60 | | 57.1 | | | | | | | | 56.7 | 56.4 | 56.1 | 56 | 56 | 55 | 53 | 52 | 45 | 321 | 125x100 |

## TECH NICAL DATA / *DATOS TiCNICOS*

**60 HZ n=1750 1/min**

| MODEL *MODELO* | Power *Potencia* kw | hp | US gpm / l/min / m³/h | Q=DELIVERY/C>4a£M£ 0 | 132 | 154 | 176 | 220 | 264 | 396 | 441 | 485 | 617 | 661 | 881 | 1101 | 1322 | 1762 | 2203 | 2643 | DN mm |
|---|---|---|---|---|---|---|---|---|---|---|---|---|---|---|---|---|---|---|---|---|---|
| | | | l/min | 0 | 500 | 583 | 667 | 833 | 1000 | 1500 | 1667 | 1833 | 2333 | 2500 | 3333 | 4167 | 5000 | 6667 | 8333 | 10000 | |
| | | | m³/h | 0 | 30 | 35 | 40 | 50 | 60 | 90 | 100 | 110 | 140 | 150 | 200 | 250 | 300 | 400 | 500 | 600 | |
| 125*200/55 • | 5.5 | 7.5 | H(m) | 1L4 | 1L1 | 1L1 | 11 | 10.9 | 10.8 | 102 | 10 | 9.7 | 8.9 | 8.6 | 6.9 | | | | | | 150x125 |
| 125-200/75 • | 7.5 | 10 | | 14.1 | 13.9 | 13.8 | 13.8 | 13.7 | 13.6 | 13.1 | 12.9 | 12.7 | 11.9 | 11.6 | 9.6 | | | | | | 150x125 |
| 125-200/110 • | 11 | 15 | | 18.1 | 17.9 | 17.8 | 17.8 | 17.7 | 17.6 | 171 | 16.9 | 16.7 | 15.9 | 15.6 | 13.6 | 9.8 | | | | | 150x125 |
| 125-250/75 • | 75 | 10 | | 15.4 | | | | | 15.3 | 15 | 14.8 | 14.6 | 13.6 | 13.1 | | | | | | | 150x125 |
| 125-250/110 • | 11 | 15 | | 19.4 | | | | | 19.3 | 19.1 | 19 | 18.9 | 18.1 | 17.8 | 153 | 1L7 | | | | | 150x125 |
| 125-250/150 · | 15 | 20 | | 23.2 | | | | | 23.3 | 23.1 | 23 | 229 | 22 | 22 | 19.8 | 16.5 | 123 | | | | 150x125 |
| 125-250/185 • | 18.5 | 25 | | 25.6 | | | | | 25.5 | 255 | 25.4 | 253 | 24.9 | 24.7 | 23 | 203 | 16.5 | | | | 150x125 |
| 125-315/185 • | 18.5 | 25 | | 27.3 | | | | | | | 26.9 | 26.7 | 25.9 | 25.6 | ***233*** | 19.7 | 14.9 | | | | 150x125 |
| 125-315/220 • | 22 | 30 | | 30 | | | | | | | 29.7 | 29.6 | 28.9 | 28.6 | 26.5 | 23.2 | 18.4 | | | | 150x125 |
| 125-315/300 • | 30 | 40 | | 35.6 | | | | | | | 35.4 | 353 | 34.8 | 34.6 | 32.9 | 30.1 | 26.1 | | | | 150x125 |
| 125-315/370 • | 37 | 50 | | 38.2 | | | | | | | 38 | 37.9 | 37.4 | 37.2 | 35.7 | 33.1 | 29.4 | 17.8 | | | 150x125 |
| 125-400/220 • | 22 | 30 | | 33.4 | | | | | | ***323*** | 325 | 32.1 | 30.5 | 29.7 | 24.7 | 173 | | | | | 150x125 |
| 125-400/300 • | 30 | 40 | | 41 | | | | | | 41 | 40.5 | 403 | 39.2 | 38.6 | 34.4 | 27.5 | 183 | | | | 150x125 |
| 125-400/370 • | 37 | 50 | | 46.2 | | | | | | 46 | 45.7 | 45.5 | 44.6 | 44.2 | 40.7 | 34.8 | 26.5 | | | | 150x125 |
| 125-400/450 · | 45 | 60 | | 5L4 | | | | | | 51 | 50.9 | 503 | 50.1 | 49.8 | 47 | 422 | 343 | | | | 150x125 |
| 125-400/550 • | 55 | 75 | | 56.5 | | | | | | 563 | 56.3 | 562 | 55.9 | 55.7 | 533 | 50.3 | 44.7 | 26.7 | | | 150x125 |
| 150-200/110 · | 11 | 15 | | 14 | | | | | | | | 13.5 | 13.4 | ***13.3*** | 13.1 | 12.9 | 117 | 7.8 | | | 200x150 |
| 150-200/150 · | 15 | 20 | | 16.3 | | | | | | | | 15.5 | 153 | 15.2 | 14.8 | 14.3 | 13.5 | 1L1 | | | 200x150 |
| 150-200/185 • | 18.5 | 25 | | 183 | | | | | | | | 17.5 | 17.3 | 17.2 | 16.8 | 16.3 | 15.5 | 13.1 | 10 | | 200x150 |
| 150-250/150 · | 15 | 20 | | 17.5 | | | | | | | | | | 16.8 | 15.9 | 14.7 | 132 | 9.2 | | | 200x150 |
| 150-250/185 • | 18.5 | 25 | | 213 | | | | | | | | | | 20.8 | 20 | 18.9 | 17.5 | 13.8 | 8.7 | | 200x150 |
| 150-250/220 • | 22 | 30 | | 24 | | | | | | | | | | 23.6 | 23 | 22 | 203 | 17.1 | 12 | | 200x150 |
| 150-250/300 · | 30 | 40 | | 25.5 | | | | | | | | | | 25 | 24.5 | 23.5 | 22 | 18.8 | ***133*** | | 200x150 |
| 150-315/300 • | 30 | 40 | | 30.2 | | | | | | | | | | 29.7 | 29 | 27.9 | 26.4 | 223 | | | 200x150 |
| 150-315/370 · | 37 | 50 | | 33.6 | | | | | | | | | | 33.5 | 32.7 | 3L7 | 30.4 | 26.7 | 21.4 | | 200x150 |
| 150-315/450 · | 45 | 60 | | 37.7 | | | | | | | | | | 37.6 | 36.9 | 35.9 | 34.7 | 3L3 | 26.5 | | 200x150 |
| 150-315/550 • | 55 | 75 | | 40 | | | | | | | | | | 40 | 393 | 38.4 | 372 | 33.9 | 29.4 | | 200x150 |
| 150-315/750 • | 75 | 100 | | 45 | | | | | | | | | | 45 | 443 | 43.4 | 422 | 38.9 | 34.4 | 27 | 200x150 |
| 150400/550 · | 55 | 75 | | 48.2 | | | | | | | | | 47.7 | 48 | 46 | 45 | 42 | 36.8 | ***292*** | | 200x150 |
| 150-400/750 · | 75 | 100 | | 55.4 | | | | | | | | | 55 | 55 | 54 | 53 | 51 | 47 | 41 | ***322*** | 200x150 |
| 150400/900 • | 90 | 125 | | 59.5 | | | | | | | | | 59 | 59 | 58 | 57 | 56 | 52 | 46 | 37.7 | 200x150 |
| 150-400/1100 · | 110 | 150 | | 65.5 | | | | | | | | | 65 | 65 | 64 | 63 | 62 | 58 | 52 | 43.7 | 200x150 |

| MODEL *MODELO* | Power *Potencia* kw | hp | US gpm / l/min / m³/h | Q=DELIVERY/C>4a£M£ 0 | 604 | 991 | 1374 | 1762 | 2145 | 2533 | 2916 | 3304 | 3687 | 4075 | 4564 | 5075 | 5586 | DN mm |
|---|---|---|---|---|---|---|---|---|---|---|---|---|---|---|---|---|---|---|
| | | | l/min | 0 | 2283 | 3750 | 5200 | 6667 | 8117 | 9583 | 11033 | 12500 | 13950 | 15417 | 17267 | 19200 | 21133 | |
| | | | m³/h | 0 | 137 | 225 | 312 | 400 | 487 | 575 | 662 | 750 | 837 | 925 | 1036 | 1152 | 1268 | |
| 200-250/185 • | 18.5 | 25 | H(m) | 15.7 | 15.3 | 14.8 | 13.7 | 122 | 10.6 | 8.9 | 6.8 | | | | | | | 250x200 |
| 200-250/220 • | 22 | 30 | | 18.5 | | 17.2 | 16.2 | 14.8 | 131 | 11.1 | 8.7 | | | | | | | 250x200 |
| 200-250/300 • | 30 | 40 | | 231 | | 2L5 | 20.5 | 19.4 | 175 | 16 | 13.6 | 10.8 | | | | | | 250x200 |
| 200-315/550 • | 55 | 75 | | 311 | | 30.2 | 29.8 | 29.1 | 273 | 253 | 23 | 19.2 | 143 | | | | | 250x200 |
| 200-315/750 • | 75 | 100 | | 35.1 | | 34.3 | 34 | 33.3 | 32 | 29.9 | 27.1 | 23.4 | 19.1 | | | | | 250x200 |
| 200-315/900 • | 90 | 125 | | 421 | | 413 | 41 | 403 | 39 | 36.9 | 34.1 | 30.4 | 26.1 | | | | | 250x200 |
| 200-400/750 • | 75 | 100 | | 41 | | 40.6 | 40.3 | 39.4 | 37.7 | 35 | 3L3 | 26.5 | | | | | | 250x200 |
| 200-400/900 • | 90 | 125 | | 46.5 | | 46 | 45.7 | 44.9 | 43.4 | 41.1 | 37.7 | ***33.3*** | ***279*** | | | | | 250x200 |
| 200-400/1100 • | 110 | 150 | | 524 | | 522 | 5L9 | 5L2 | 50 | 48 | 45.1 | 4L2 | ***362*** | | | | | 250x200 |
| 200-400/1320 • | 132 | 180 | | 60.1 | | 59.8 | 59.6 | 59 | 57.9 | 56.1 | 53.5 | 50 | 45.4 | 39.6 | | | | 250x200 |
| 250-315/550 • | 55 | 75 | | 261 | | | 24.9 | 24.5 | 24.1 | 23.6 | 228 | 2L6 | 19.9 | 18 | 14.5 | | | 300x250 |
| 250-315/750 • | 75 | 100 | | 35.4 | | | 35.2 | 34.7 | 333 | 325 | 30.4 | 28 | 25 | 213 | 16.4 | | | 300x250 |
| 250-315/900 • | 90 | 125 | | 393 | | | 39.8 | 39.5 | 383 | 373 | 36 | 33.9 | 31 | 273 | 225 | | | 300x250 |
| 250-400/1100 • | 110 | 150 | | 45.1 | | | 45 | 44.9 | 44.5 | 43.8 | 423 | 40.5 | 37.9 | 35.1 | 30 | 23.9 | | 300x250 |
| 250-400/1320 • | 132 | 180 | | 503 | | | 50.6 | 50.5 | 502 | 49.7 | 48.4 | 46.8 | 44.5 | 42 | 37.3 | 3L5 | | 300x250 |
| 250-400/1600 • | 160 | 220 | | 56.9 | | | 56.4 | 563 | 56 | 55.6 | 54.5 | 53.1 | 5 LI | 48.9 | 44.7 | 39.4 | 33 | 300x250 |

**•=PS4** ***avai\ab\e/disponible***

## MATERIAL *DESCm^IOH I DESCRIPCIdN DE MATERIAL*

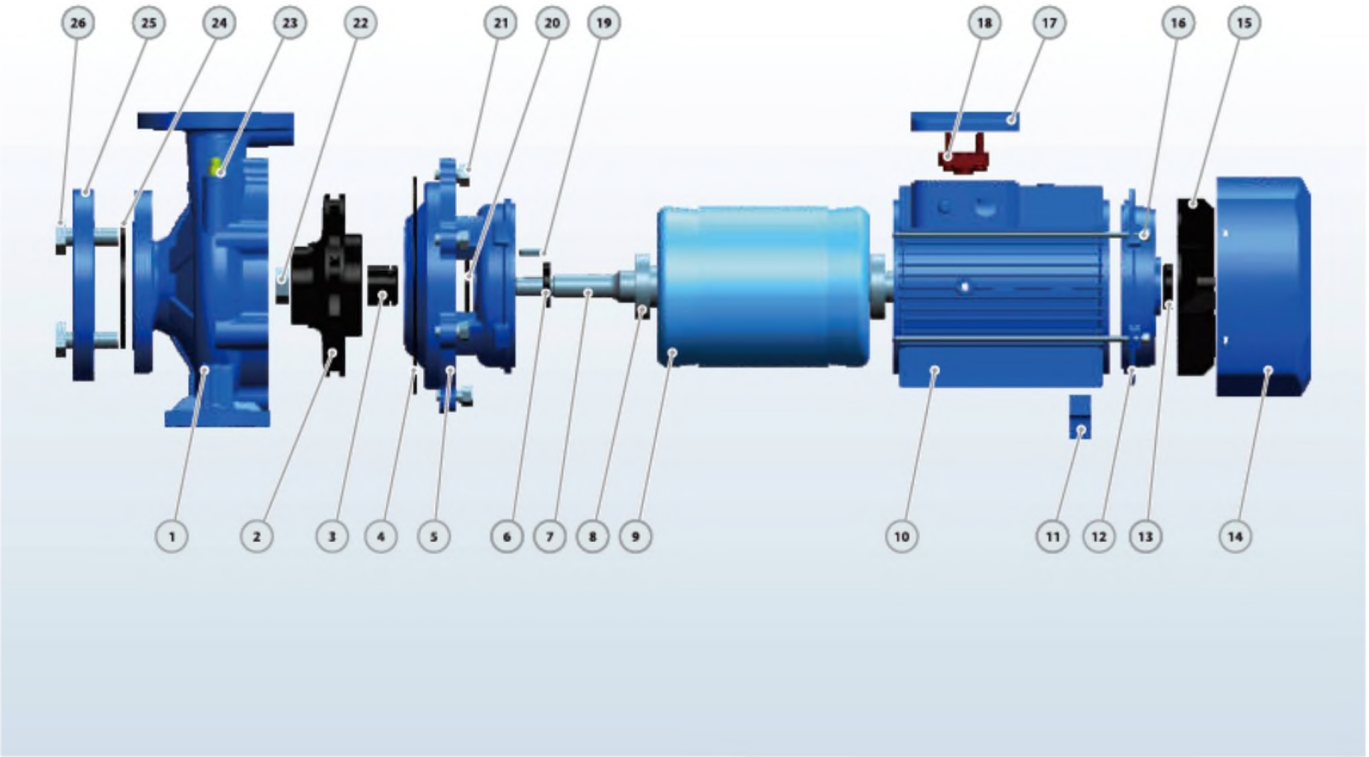


| No. | Description<br>*Descripción* | Material<br>*Material* | No. | Description<br>*Descripción* | Material<br>*Material* | No. | Description<br>*Descripción* | Material<br>*Material* |
|---|---|---|---|---|---|---|---|---|
| 1 | Pump Case<br>*Cuerpo de Bomba* | Cast iron<br>*Fundición* | 10 | Motor Case<br>*Cuerpo de Motor* | Aluminum<br>*Aluminio* | 19 | Impeller Key<br>*Chaveta Impulsor* | Iron<br>*Hierro* |
| 2 | Impeller<br>*Impulsor* | SS304/Cast iron<br>*Inox 304/Fundición* | 11 | Support Foot<br>*Soporte Pie* | Plastic<br>*Plástico* | 20 | Water Deflector<br>*Deflector* | Rubber<br>*Caucho* |
| 3 | Mechanical Seal<br>*Cierre Mecánico* | SiC/Carbon/SS304<br>*SiC-Grafito-Inox304* | 12 | Back Cover<br>*Tapa Trasera* | Cast iron<br>*Fundición* | 21 | Connection Bolt<br>*Perno* | Steel<br>*Acero* |
| 4 | O-ring<br>*Junta Tórica* | *Rubber*<br>*Caucho* | 13 | Reinforced Seal<br>*Sello Reforzado* | Rubber<br>*Caucho* | 22 | Impeller Nut<br>Júeiv7A de toeu/soc | Galvanizated Steel<br>*Acero Galvanizado* |
| 5 | Connection<br>*Conexión* | Cast iron<br>*Fundición* | 14 | Fan Cover<br>*Tapa Ventilador* | Aluminum<br>*Aluminio* | 23 | Release Valve<br>*Tapón Cebado* | Brass<br>*Bronce* |
| 6 | Reinforced Seal<br>*Sello Reforzado* | Rubber<br>*Caucho* | 15 | Fan<br>*Ventilador* | Plastic<br>*Plástico* | 24 | Gasket<br>*Empague* | Rubber<br>*Caucho* |
| 7 | Shaft<br>*Eje* | SS304/45# Steel<br>*Inox 304/45# Hierro* | 16 | Through Bolt<br>*Perno* | Steel<br>*Acero* | 25 | Counter Flange<br>*Contra Brida* | Galvanizated Cast iron<br>*Fundición Galvanizado* |
| 8 | Bearing<br>*Rodamiento* | Ball Bearing<br>*Bola Rodamiento* | 17 | Terminal Box<br>*Caja de Bornas* | Aluminum<br>*Aluminio* | 26 | Flange Bolt<br>*Perno de Brida* | Steel<br>*Acero* |
| 9 | Wound Stator/Rotor<br>*Estator / Rotor* | Silicon Steel/Copper<br>*Acero al Silicio/Cobre* | 18 | *Terminal Board*<br>*Tablero de Bornas* | Plastic<br>*Plástico* | | | |

## MMERIAL DESCRIPTION / *DESCRIPCI6N DE MATERIAL*

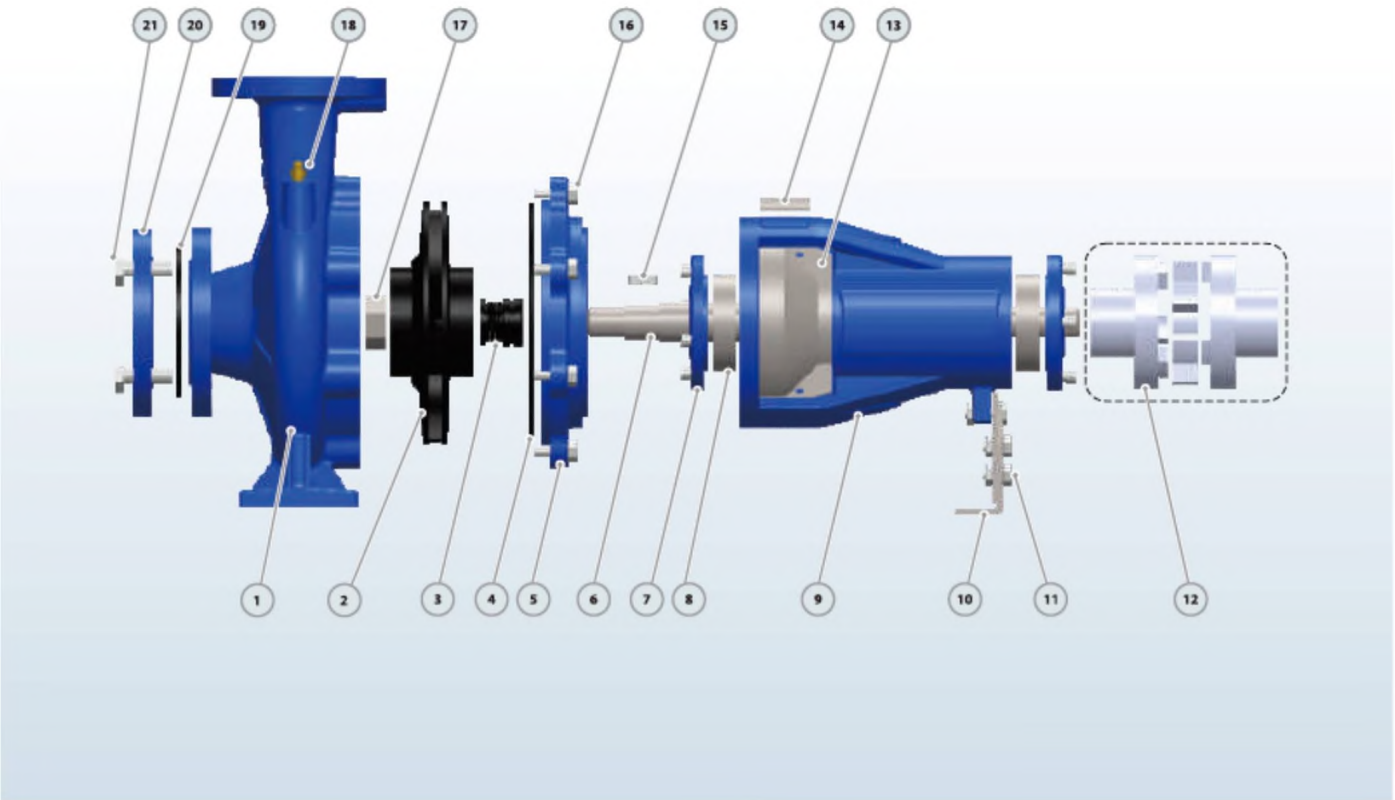


| No. | Description<br>Q££CD̃fl£ÛÛk | Material<br>Marerial | No. | Description<br>Uejujẃuiuk | Material<br>Material | No. | Description<br>Qe&cfuuúoa | Material<br>M areñ/ |
|---|---|---|---|---|---|---|---|---|
| 1 | Pump Case<br>Cuerpo de Bomba | Cast iron<br>Fundición | 8 | Bearing<br>RotiunisniQ, | Ball Bearing<br>Bola RodAmj&JiiQ | 15 | Impeller Key<br>Q_tj0妨奴Impulsor | Iron<br>tijRJOQ, |
| 2 | Impeller<br>Impulsor | SS304/Cast iron<br>blQX,304^JUUiiÛM | 9 | Support Case<br>Cuerpo Soporte | Cast iron<br>Fundición | 16 | Connection Bolt<br>Perno | Steel<br>Acero |
| 3 | Mechanical Seal<br>Cierre Mecánico | SJC/Carbon/SS304<br>SiC-Grafito-Inox304 | 10 | Support Foot<br>SQfiSUlAPie | Iron<br>胧gg | 17 | Impeller Nut<br>IusiCA de impuJsac | GaJmizaUul Steel<br>Acero Galvanizado |
| 4 | O-ring<br>Junta Tórica | Rubber<br>Caucho | 11 | Foot Bolt<br>Eenia | Steel<br>Acexti | 18 | Release Valve<br>IAHÔR GAtiAdo, | Brass<br>Bronce |
| 5 | Connection<br>Conexión | Cast iron<br>Fundiciñn | 12 | CoupBng(Optional)<br>UntdnfQ^aoneJ) | Steel<br>Acem | 19 | Gasket<br>Empague | Rubber<br>Caucho |
| 6 | Shaft<br>to | SS304/45# Steel<br>toe 304/45# ttaa | 13 | Case Cover<br>Tapa CLuex/za | SS304<br>Inox304 | 20 | Counter Flange<br>Contra Brida | GaUaniu如I Cast iron<br>Fundic 細（^測扣血 |
| 7 | Bearing Cover<br>Taps Rnfiamifinfn | Cast iron<br>Fundición | 14 | Nameplate<br>Letrero | Aluminum<br>Ahicnkiio. | 21 | Flange Bolt<br>Pezno. de Brida. | Steel<br>Anero. |

## DIMENSIONS AND WEIGHT / *DIMENSIONES YPESOS*

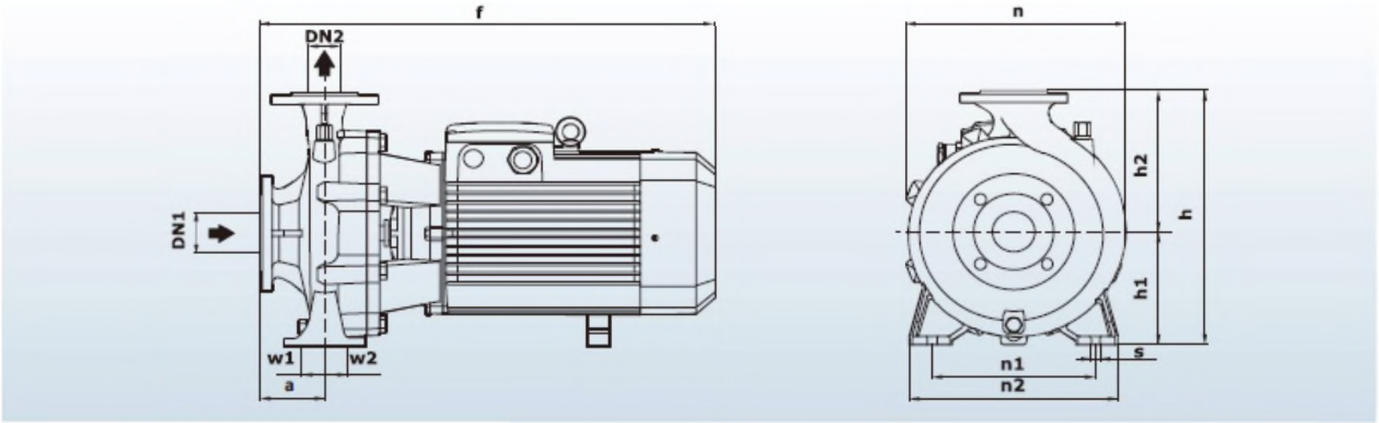


| MODEL/ ***MODELO*** | | DIMENSIONS / ***DIMENSIONES*** mm | | | | | | | | | | | | | kg | |
|---|---|---|---|---|---|---|---|---|---|---|---|---|---|---|---|---|
| Single-phase ***Manof^sico*** | Three-phase ***Trif^sico*** | DN1 | DN2 | a | f | h | hi | h2 | n | n1 | n2 | w1 | w2 | s | 1- | 3- |
| 32 125/7 | 32-125/7 | | | 80 | | 255 | 114 | 141 | 202 | 140 | 190 | | | | 27 | 24 |
| 32-125/11 | 32-125/11 | | | | 435 | | | | | | | | | | 28 | 25 |
| 32-160/15 | 32-160/15 | | | | | | | | | | | | | | 38 | 34 |
| 32-160/22 | 32-160/22 | | | 83 | | 295 | 133 | 162 | 245 | | 245 | 35 | 35 | 15 | 43 | 39 |
| 32-160/30 | 32-160/30 | | | | 470 | | | | | 190 | | | | | 54 | 50 |
| 32-200/30 | 32-200/30 | | | 82 | 490 | 342 | 161 | 181 | 265 | | 240 | | | | 56 | 52 |
| - | 32-200/40 | cn | 32 | | | | | | | | | | | | - | 53 |
| - | 32-250/55 | | | | | | | | | | | | | | - | 66 |
| - | 32-250/75 | | | 88 | 590 | 405 | 186 | 219 | 333 | 250 | ***328*** | 49 | 49 | 16 | - | 73 |
| - | 32-250/110 | | | | | | | | | | | | | | - | 95 |
| - | 32-250/55D | | | 160 | 610 | 362 | 162 | 200 | 330 | 216 | 280 | | | 14 | - | 73 |
| - | 32-250/75D | | | | | | | | | | | | | | - | 80 |
| 40-125/11 | 40-125/11 | | | 82 | 440 | 260 | 116 | 144 | 220 | 160 | 212 | | | | 30 | 27 |
| 40-125/15 | 40-125/15 | | | | | | | | | | | | | | 33 | 29 |
| 40-125/22 | 40-125/22 | | | | | | | | | | | 37 | 37 | | 38 | 34 |
| 40-160/30 | 40-160/30 | | | 80 | 490 | 305 | 135 | 170 | 250 | 190 | 241 | | | | 52 | 48 |
| - | 40-160/40 | | 40 | | | | | | | | | | | | - | 50 |
| - | 40-200/55 | | | 102 | 560 | 345 | 162 | 193 | 282 | 214 | 267 | | | | - | 66 |
| - | 40-200/75 | | | | | | | | | | | | | | - | 73 |
| - | 40-250/92 | | | | | | | | | | | | | | - | 100 |
| - | 40-250/110 | | | 94 | 712 | 415 | 186 | 229 | 327 | 250 | ***327*** | 49 | 49 | | - | 116 |
| - | 40-250/150 | 65 | | | | | | | | | | | | | - | 146 |
| 50-125/22 | 50-125/22 | | | | | | | | | | | | | | 45 | 41 |
| 50-125/30 | 50-125/30 | | | 102 | 525 | 305 | 135 | 170 | 263 | 190 | ***245*** | | | | 54 | 50 |
| - | 50-125/40 | | | | | | | | | | | | | | - | 52 |
| - | 50-160/55 | | | | | | | | | | | | | | - | 64 |
| - | 50-160/75 | | | 110 | 560 | 348 | 164 | 193 | 270 | 212 | ***262*** | 37 | 37 | | - | 71 |
| - | 50-200/92 | | 50 | | | | | | | | | | | 15 | - | 90 |
| - | 50-200/110 | | | 104 | 722 | 392 | 186 | 206 | 307 | 232 | 310 | | | | - | 106 |
| - | 50-250/150 | | | | | | | | | | | | | | - | 145 |
| - | 50-250/185 | | | 102 | 720 | 416 | 186 | 230 | 330 | 250 | 327 | | | | - | 153 |
| - | 50-250/220 | | | | | | | | | | | | | | - | 183 |
| - | 65-125/40 | | | | | | | | | | | | | | - | 56 |
| - | 65-125/55 | | | 104 | 580 | 345 | 162 | 193 | 275 | 212 | 280 | | | | - | 68 |
| - | 65-125/75 | | | | | | | | | | | | | | - | 74 |
| - | 65-160/92 | | | | | | | | | | | | | | - | 90 |
| - | 65-160/110 | 80 | 65 | 110 | 730 | | | 239 | | | | | | | - | 106 |
| - | 65-160/150 | | | | | 425 | 186 | | | 232 | 309 | 49 | 49 | | - | 134 |
| - | 65-200/150 | | | | | | | | | | | | | | - | 140 |
| - | 65-200/185 | | | 111 | 740 | | | 240 | | | | | | | - | 145 |
| - | 65-200/220 | | | | | | | | 330 | | | | | | - | 185 |
| - | 80-125/40 | | | | | | | | | | | | | | - | 56 |
| - | 80-125/55 | | | 117 | | 357 | 163 | 194 | | 212 | 280 | | | | - | 68 |
| - | 80-125/75 | 100 | 80 | | 750 | | | | | | | | | | - | 74 |
| - | 80-160/110 | | | | | | | | | | | | | | - | 113 |
| - | 80-160/150 | | | 88 | | | | | | 255 | 332 | | | | - | 143 |
| - | 80-160/185-220 | | | | | 435 | 186 | 250 | | | | | | | - | 150 |
| - | 100-160/150 | | | | | | | | | | | | | | - | 143 |
| - | **100-160/185** | 125 | 100 | 130 | 765 | | | | 345 | 262 | 340 | 55 | 55 | 16 | - | 150 |
| - | 100-160/220 | | | | | | | | | | | | | | - | 183 |

## DIMENSIONS AND WEIGHT/ *DIMENSIONES YPESOS*

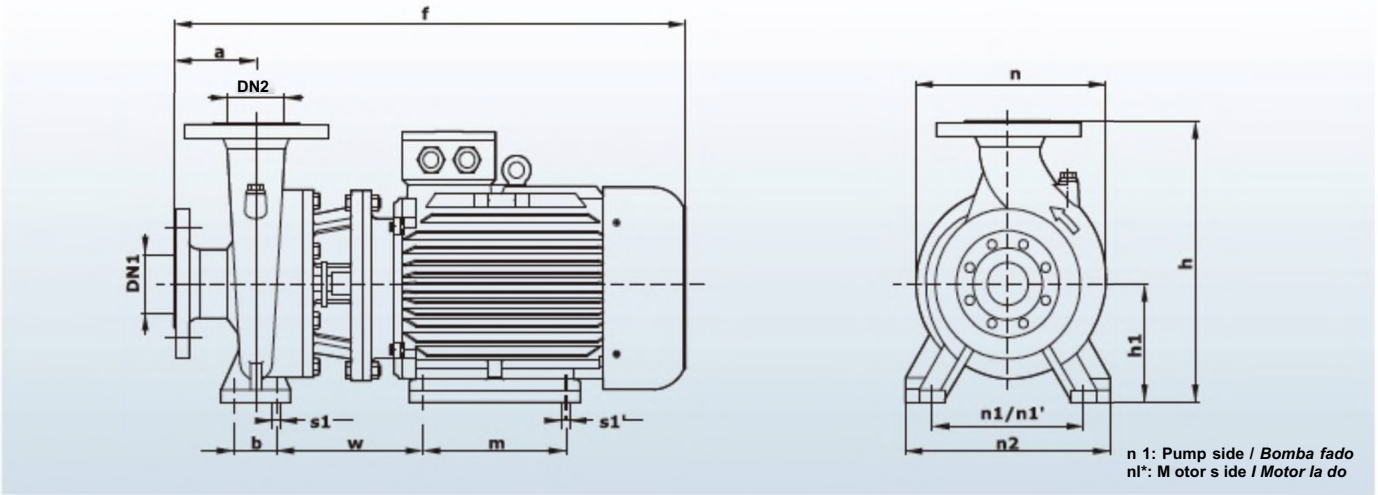


| MODEL/MODELO Three-phas ❷ *Trif^sico* | DIMENSIONS *1 DIMENSIONES* mm | | | | | | | | | | | | | | | kg |
|---|---|---|---|---|---|---|---|---|---|---|---|---|---|---|---|---|
| | DN1 | DN2 | a | f | h | hi | n | n1 | nV | n2 | b | w | m | s1 | s1_ | 3~ |
| 65-250/220 | 80 | 65 | 116 | 870 | 420 | 180 | 369 | 260 | 279 | 320 | 70 | 246 | 241 | 18 | 15 | 210 |
| 65-25Q/300 | | | | 990 | 456 | 195 | | 250 | 318 | 327 | | 293 | 305 | | 19 | 230 |
| 65-25Q/370 | | | | | | | | | | | | | | | | 240 |
| 80-200/220 | 100 | 80 | 118 | 880 | 460 | 250 | 360 | 310 | 279 | 260 | 95 | 258 | 20 | | | 212 |
| 80-200/300 | | | | 950 | | | | | 318 | | | 246 | 241 | | 15 | 222 |
| **80-250/370** | | | 130 | | 537 | | 490 | | | 310 | | 228 | 305 | | 19 | 245 |
| 80-250/450 | | | | 980 | | | | | 356 | | | 229 | 311 | | | 385 |
| 80-25(V550 | | | | 1160 | | | | | 406 | | | 363 | 349 | | 24 | 497 |
| 100-200/220 | 125 | 100 | 140 | 910 | 530 | 225 | 422 | 324 | 279 | 402 | 115 | 256 | 305 | 18 | 15 | 217 |
| 100-200/300 | | | | 1025 | | | | | 318 | | | 248 | 241 | | | 227 |
| 100-200/370 | | | | | | | | | | | | | | | | 250 |
| 100<250/450 | | | | 1000 | 580 | 250 | 418 | 310 | 356 | 402 | 95 | 224 | 311 | 20 | 19 | 390 |
| 100-250/550 | | | | 1180 | | | | | 406 | | | 325 | 349 | | 20 | 503 |
| 100-250/750 | | | | 1250 | | 280 | | | 436 | | | | | | | 535 |

## COUNTER FLANGE / *CONTRABRIDA*

| DN | D | K | HOLES *ORIHOOS* | |
|---|---|---|---|---|
| | mm | mm | N | 0mm |
| 32 | 140 | 100 | 4 | 18 |
| 40 | 150 | 110 | | |
| 50 | 165 | 125 | | |
| 65 | 185 | 145 | | |
| 80 | 200 | 160 | 8 | |
| 100 | 220 | 180 | | |
| 125 | 250 | 210 | | |
| 150 | 285 | 240 | | 22 |
| 200 | 340 | 295 | | |
| 250 | 405 | 355 | 12 | 26 |


## PIPE RECOMMEND *ITUBERIA RECOMENDADA*

| SERIES *SERIE* | SUCTION *ASPIRAadN* | DISCHARGE *IMPULSION* | PIPE RECOMMEND *TUBERIA RECOMENDADA* SUCTION *ASPRAODN* | DISCHARGE *IMPULSION* |
|---|---|---|---|---|
| 32 | 50mm | 32mm | 2%'-3- | 2--2¹// |
| 40 | 65mm | 40mm | 3'-4- | 2W |
| 50 | 65mm | 50mm | 4" | r |
| 65 | 80 mm | 65mm | 5B | 4- |
| 80 | 100 mm | 80mm | 6' | 5B |
| 100 | 125 mm | 100 mm | 8B | 6- |
| 125 | 150 mm | 125mm | 10. | 8" |
| 150 | 200mm | 150mm | 12- | 10- |
| 200 | 250mm | 200mm | 14" | 12. |
| 250 | 300mm | 250mm | 16- | 14- |

## DIMENSIONS AND WEIGHT / *DIMENSIONES YPESOS*

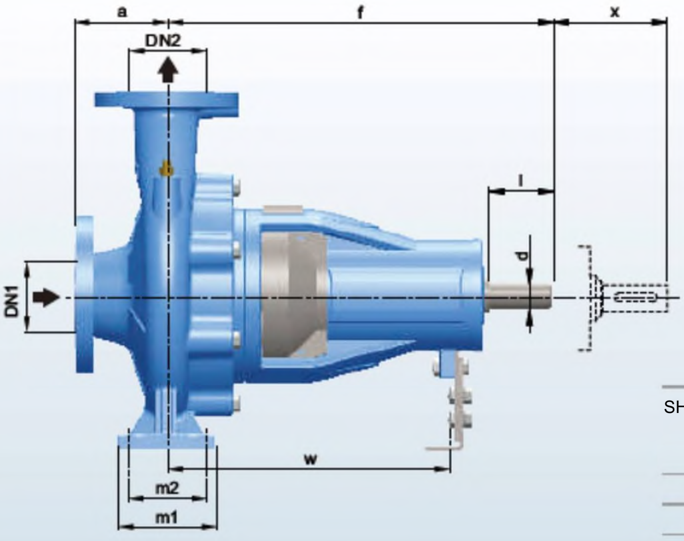

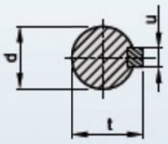

SHAFT DIMENSIONS

***EJE DIMENSIONES***

**mm**

| d | u | ⊥ |
|---|---|---|
| **24** | **8** | 27 |
| **32** | **10** | 35 |
| **42** | **12** | **45** |
| **60** | **18** | 64 |

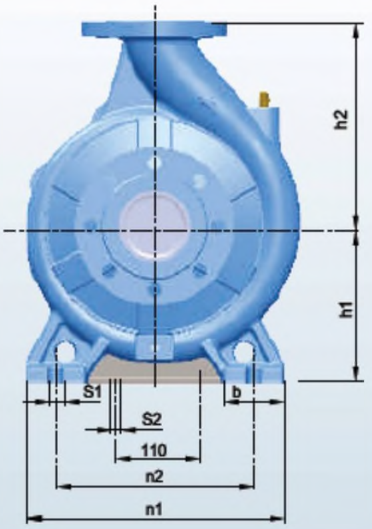

| MODEL<br>***MODELO*** | DIMENSIONS / ***DIMENSIONES*** mm | | | | | | | | | | | | | | | | | kg |
|---|---|---|---|---|---|---|---|---|---|---|---|---|---|---|---|---|---|---|
| | DN1 DN2 a | | | f | hi h2 b ml m2 rd n2 $1 s2 w | | | | | | | | | | x | d | l | |
| 32-160 | 50 | 3 2 | 80 D | 360 | 132 | ∽ | 5 5 | 9 5 | 70 | 24 0 | 19 0 | 1 4 | 14 | ^ | 100 | 2 4 | 50 | 芸 |
| 32-200 | 50 | 3 2 | 80 3 | 360 | 160 | ∽ | 5 | 95 | 70 | 24 0 | 19 0 | 1 4 | 14 | 260 | 100 | 2 4 | 50 | |
| 32-250 | 50 | 3 2 | 80 D | 360 | 160 | 韻 | 5 5 | 9 5 | 70 | 24 0 | 19 0 | 1 4 | 14 | 260 | 100 | 2 4 | 50 | 芸 |
| 40-160 | 65 | 4 q | 80 D | 360 | 132 | | 0 | 100 | 70 | 24 0 | 19 0 | 1 4 | 14 | 260 | 100 | 2 4 | 50 | |
| 40-200 | 65 | 4> | 10 0 | 360 | 160 | ∽ | 5 5 | 1 | 70 | 26 5 | 21 2 | 1 4 | 14 | 260 | 100 | 2 4 | 50 | |
| **40-250** | 65 | 4Q | 10 0 | 360 | 180 | | 5 | 畳 | 95 | 32 0 | 25 0 | 1 4 | 14 | 260 | 100 | 2 4 | 50 | S58 |
| 50-125 | 65 | 夕 Q | 10 0 | 360 | 132 | | 5<br>50 | :00 | 70 | 24 0 | 19 0 | 1 4 | 14 | 260 | 100 | 2 4 | 50 | 30 |
| **50-160** | 65 | Q | 10 0 | 60 | 160 | 畳 | 5<br>55 | .00 | 70 | 26 5 | 21 2 | 1 4 | 14 | 260 | 100 | 2 4 | 50 | 35 |
| 50-200 | 65 | Q | 10 0 | 360 | 160 | | 50 | 100 | 70 | 26 5 | 21 2 | 1 4 | 14 | 260 | 100 | 2 4 | 50 | 45 |
| **50-250** | 65 | Q | 10 0 | 360 | 180 | § | 65 | 125 | 95 | 32 0 | 25 0 | 1 4 | 14 | 260 | 100 | 2 4 | 50 | 50 |
| 65-125 | 80 | § 5<br>6 | 10 0 | 360 | 160 | 180 | 65 | 125 | 95 | 28 0 | 21 2 | 1 4 | 14 | 260 | 100 | 2 4 | 50 | 42 |
| 65-160 | 80 | 5 | 10 0 | 5 | 160 | 200 | 65 | 125 | 95 | 28 0 | 21 2 | 1 4 | 14 | 260 | 100 | 2 4 | 50 | S |
| 65-200 | 80 | 6 5<br>6 | 10 0 | 靈 | 180 | 225 | 65 | 12 | 95 | 32 0 | 25 0 | 1 8 | 14 | | 140 | 2 4 | 58 | § |
| 65-250 | S | 善 | 10 0 | 慕 | § | 250 | 80 | 160 | 1 | 36 0 | 28 0 | 1 8 | 14 | 260 | 140 | 3 2 | | 3 |
| 65-315 | S | 80 | 12 5 | 470 | 225 | 280 5 | 80 | 160 | 1 | 36 0 | 28 0 | 1 4 | 14 | 260 | 140 | 3 2 | 80 | 113 |
| 80-125 | 100 | 80 | 10 0 | 470 | 180 | 22 5 | 65 | 125 | | 32 0 | 25 0 | 1 4 | 14 | | 140 | 2 4 | 50 | 150 |
| 80-160 | 100 | 80 | 10 0 | 蓋 | 180 | 22 2 0 | 6 5 | 125 | | 34 5 | 25 0 | 1 8 | 14 | 340 | 140 | 2 4 | 58 | |
| 80-200 | 100 | 工 80 | 10 0 | | 200 | 2 5 Q | 6 5 | 125 | | 34 5 | 28 0 | 1 8 | 14 | 340 | 140 | 3 2 | | 8 |
| 80-250 | 100 | 80 | 10 0 | | 200 | 31 8 I | 8 0 | 1<br>160 § | 1 | 40 0 | 31 5 | 1 8 | 14 | 260 | 140 | 3 2 | 80 | |
| 80-315 | 100 | 工 100 | 12 5 | | 250 | 35 2 5 | 8 0 | 60 | 1<br>120 | 40 0 | 31 5 | 1 8 | 14 | 340 | 140 | 2 4 | 50 | 116 |
| 80-400 | 100 | 工 100 | 12 5 | | 280 | 2 5 | 8 0 | 60 | 120 | 40 0 | 31 5 | 1 8 | 14 | 340 | 140 | 3 2 | 88 | 178 |
| 100-160 | 125 | 工 100 | 12 5 | | 200 | 2 0 | 8 0 | 168 § | 195 | 36 0 | 28 0 | 1 9 | 14 | 340 | 140 | 3 2 | | 112 |
| 100-200 | 125 | 工 100 | 12 5 | ∽ | 200 | 8 P | 80 | 1 | 195<br>195 | 36 0 | 28 0 | 1 3 | 14 | 370 | 140 | 3 2 | 80 | 112 |
| 100-250 | 125 | 工 100 | 12 | 4- 70 | 225 | 8 Q | 80 | 1 | 120 | 40 0 | 31 5 | 1 | 14 | | 140 | 3 2 | 80 | 152 |
| 100-315 | 125 | 工 | 140 | 470 | 250 | 8 315 | 80 | 1 60 | 120 | 40 0 | 31 5 | 1 | 14 | 370 | 140 | 3 2 | 80 | 200 |
| 100-400 | 125 | | 140 | 530 | 280 | 355 | 100 | 00 | 120<br>120 | 50 0 | 40 0 | 2 | 14 | 370 | 140 | 2 | 110 | 166 |
| 125-200 | 150 | 125 | 140 | 470 | 250 | 315 | 80 | 1 60 | 120 | o<br>40 | 5<br>31 | 19<br>1 9 | 14 | 370 | 140 | 4 2 | 88 | 180 |
| **125~250** | 150 | 125 | 140 | 470 | 250 | 355 | 80 | 68 28 | 120 | | | 2 3 | 14 | 370 | 14 | 2 | | 186 |
| **12M1S** | 150 | 125 | 140 | 530 | 280 | 355 | 100 | 2 | 120<br>150 | | | 2 3 | 14 | 370 | 140 | 3 2 | 110 | 228 |
| 125-400 | 150 | 125 | 140 | 530 | 315 | 400 | 100 | 08 28 | 120 | Q o | 31 5 | 2 3 | 14 | 370 | 140 | 2<br>4 | 110 | 230 |
| 150-200 | 200 | 150 | 160 | 470 | 280 | 400 | 100 | 2<br>68 28 | 120 | 工 4^ Q o | ^ 0 | 2 3 | 14 | 370 | 140 | 3 2 | 80 | 234 |
| **iaMs** ❶ | 200 | 150 | 160 | 530 | 280 | 400 | 100 | 08 | 150<br>150 | 5< Q o<br>55 5 o | 44 ^ 0<br>44 45 0 | 2 3 | 14 | 370 | 140 | 2<br>4 | 110 | 363 |
| **15M15** | 200 | 150 | 160 | 530 | 280 | 400 | 100 | 00 | 150 | 5 5 B | 45 0 | 2 3 | 14 | | 140 | 4 2<br>4 | 110 | 316 |
| **15^400** | 200 | 150 | 160 | 530 | 315 | 450 | 100 | 21 | 150 | 5 5 p | 45 0 | 2 3 | 14 | | 140 | 2<br>4 | 110 | 400 |
| 200-250 | 250 | 200 | 180 | 530 | 355 | 475 | 100 | 21 | 150<br>150 | zj 5 5 o<br>工 5 5 B | 45 0<br>45 0 | 2 3 | 14 | | 200 | 4 2 | 110 | |
| 200-315 | 250 | 200 | 180 | 530 | 355 | 450 | 100 | 21 | 250 | 5 5 p | 45 0 | 2 8 | 14 | | 200 | 2<br>6 | 110 | |
| 200^400 | 250 | 200 | 180 | 770~~ | 400 | 500 | 110 | 300 | 150 | 工 7 1 o | 0 0 | 2 8 | 14 | 525 | 250 | 3 0<br>4 | 140 | |
| 250-315 | 300 | 250 | 250 | 530 | 400 | 500 | 110 | 300 | 5()<br>5() | 7 1 B<br>7 1 oI | 6( 0 0<br>6< 0 0 | 2 8 | 14 | 525<br>52 | 250 | 2 | 110 | |
| 250-400 | 300 | 250 | 250 | 770 | 400 | 560 | 110 | 300 | 5() | -T | 6( | | 14 | 5 | 250 | 4 0<br>6 | 140 | |

# Horizontal Water Pumps PST-F

## PST-F

### TECHNICAL DESCRIPTION

-New EN733 standard centrifugal pump

- Original design by PURITY (patented)
- Both square motor & round motor available

-YE3 high efficient motor, with protection IP55 class F

-Pump case with anti-corrosive coating

- Impeller in stainless steel AISI 304 or cast iron
- Shaft in stainless steel AISI 304 or galvanized iron
- Galvanized counter flange with bolts, nuts and gaskets
- Quality NSK bearing, wear resistance mechanical seal

## Product Specification (50HZ)


**NEW/NUEVO**

### TECHNICAL DESCRIPTION

■ New EN733 standard centrifugal pump
-Original design by PURITY (patented)
■ Both square motor & round motor available
-YE3 high efficient motor, with protection IP55 class F
-Pump case with anti-corrosive coating
■Impeller in stainless steel AISI 304 or cast iron
■ Shaft in stainless steel AISI 304 or galvanized iron
■ Galvanized counter flange with bolts, nuts and gaskets
• Quality NSK bearing, wear resistance mechanical seal

### APPLICATIONS

■ Suitable for use with clean water and liquids that are not chemically
■ aggressive towards the materials from which the pump is made.
■ The EN733 centrifugal pumps are recommended for use in water supply,
■ cleaning sets, pressure boosting, firefighting sets, irrigation, industrial
■ applications, water circulation in climatisation sets, agricultural.

### USING LIMITS

■ Liquid temperature between -10°C and +120°C
■ Ambient temperature up to +50°C
■ Max. working pressure 16 bar
■ Continuous service S1

### PATENTS

-Registered model PST
-Registered Patent Design n 201530478502.0

## STANDARD IMPELLER MATERIAL

| DISCHARGE SIZE *DE DESCARGA* | IMPELLER SIZE *DEL IMPULSOR* | | | | | | |
|---|---|---|---|---|---|---|---|
| | 125 | 160 | 200 | 250 | 250D | 315 | 400 |
| 32 | SS304 | SS304 | SS304 | Cast iron | SS304 | | |
| 40 | Cast iron | Cast iron | SS304 | Cast iron | / | | |
| 50 | Cast iron | Cast iron | Cast iron | Cast iron | / | | |
| 65 | Cast iron | Cast iron | Cast iron | Cast iron | / | Cast iron | |
| 80 | Cast iron | Cast iron | Cast iron | Cast iron | / | Cast iron | Cast iron |
| 100 | | Cast iron | Cast iron | Cast iron | / | Cast iron | Cast iron |
| 125 | | | Cast iron | Cast iron | / | Cast iron | Cast iron |
| 150 | | | Cast iron | Cast iron | / | Cast iron | Cast iron |
| 200 | | | | Cast iron | / | Cast iron | Cast iron |
| 250 | | | | | / | Cast iron | Cast iron |

TECHICAL DATA/DATOS TECNICOS

50 HZ n=2900 1/min

| MODEL *MODELO* | Power *Potencia* | | us gpm | Q= DELIVERY / *CAUDAL* | | | | | | | | | | | | | | | | | | | DN |
|---|---|---|---|---|---|---|---|---|---|---|---|---|---|---|---|---|---|---|---|---|---|---|---|
| | | | | 0 | 26 | 40 | 66 | 79 | 106 | 119 | 159 | 185 | 211 | 238 | 317 | 370 | 396 | 476 | 529 | 608 | 793 | 925 | |
| | | | l/min | 0 | 100 | 150 | 250 | 300 | 400 | 450 | 600 | 700 | 800 | 900 | 1200 | 1400 | 1500 | 1800 | 2000 | 2300 | 3000 | 3500 | |
| | kw | hp | m³/h | 0 | 6 | 9 | 15 | 18 | 24 | 27 | 36 | 42 | 48 | 54 | 72 | 84 | 90 | 108 | 120 | 138 | 180 | 210 | mm |
| 32-125/07 | 0.75 | 1 | | 17.5 | 16.7 | 15 | 12 | 9 | | | | | | | | | | | | | | | 50x32 |
| 32-125/11 | 1.1 | 1.5 | | 22 | 21 | 19.7 | 16.5 | 14.5 | 9 | | | | | | | | | | | | | | 50x32 |
| 32-160/15 | 1.5 | 2 | | 25.4 | 23.7 | 22.5 | 18.5 | 15.8 | | | | | | | | | | | | | | | 50x32 |
| 32-160/22 | ***2.2*** | 3 | | 31 | 29.6 | 28.5 | 24.5 | 22 | 15 | | | | | | | | | | | | | | 50x32 |
| 32-160/30 | 3 | 4 | | 35 | 343 | 34 | 28 | 25.5 | 19 | 15 | | | | | | | | | | | | | 50x32 |
| 32-200/30 | 3 | 4 | | 44.2 | 43 | 39.8 | 35.2 | 32.2 | 24.6 | 19.8 | | | | | | | | | | | | | 50x32 |
| 32-200/40 | 4 | 5.5 | | 54.5 | 52 | 50 | 45.5 | 41.9 | 35 | 30.3 | | | | | | | | | | | | | 50x32 |
| 32-250/55 | 5.5 | 7.5 | | 60 | 59.5 | 59 | 55 | 51 | 34.5 | | | | | | | | | | | | | | 50x32 |
| 32-250/75 | 7.5 | 10 | | 69.5 | 69 | 68.5 | 66 | 63 | 53 | | | | | | | | | | | | | | 50x32 |
| 32-250/110 | 11 | 15 | | 90 | 89.5 | 89 | 82 | 79 | 66 | | | | | | | | | | | | | | 50x32 |
| 32-250/55D | 5.5 | 7.5 | | 79.5 | 74.7 | 71.8 | 63 | 56 | 37.5 | | | | | | | | | | | | | | 50x32 |
| 32-250/75D | 7.5 | 10 | | 95 | 93 | 91 | 83 | 76 | 57.8 | | | | | | | | | | | | | | 50x32 |
| 40-125/11 | 1.1 | 1.5 | | 14.7 | | | | 13.5 | 11.5 | 10.1 | 5.8 | | | | | | | | | | | | 65x40 |
| 40-125/15 | 1.5 | 2 | | 18.1 | | | | 17 | 15 | 13.9 | 9.6 | 6 | | | | | | | | | | | 65x40 |
| 40-125/22 | 2.2 | 3 | | 24.5 | | | | 23.2 | 21.5 | 20.2 | 16 | 13 | 83 | | | | | | | | | | 65x40 |
| 40-160/30 | 3 | 4 | | 31.8 | | | | 29.5 | 27.5 | 26.3 | 21.5 | 17.5 | | | | | | | | | | | 65x40 |
| 40-160/40 | 4 | 5.5 | | 38 | | | | 36 | 34 | 33 | 28.5 | 25 | 20.1 | | | | | | | | | | 65x40 |
| 40-200/55 | 5.5 | 7.5 | | 46 | | | | 43.8 | 41.3 | 40.1 | 35 | 30 | | | | | | | | | | | 65x40 |
| 40-200/75 | 7.5 | 10 | | 57 | | | | 53.6 | 51.5 | 50 | 45 | 41 | 36.5 | | | | | | | | | | 65x40 |
| 40-250/92 | 9.2 | 12.5 | | 64 | | | | 59 | 56.5 | 55 | 49.5 | 45 | 39.8 | | | | | | | | | | 65x40 |
| 40-250/110 | 11 | 15 | | 72 | | | | 67.5 | 66 | 63.5 | 57.5 | 52.2 | 47 | | | | | | | | | | 6Sx40 |
| 40-250/150 | 15 | 20 | | 84.5 | | | | 80 | ***77.3*** | 75.2 | 71 | 65 | 61 | | | | | | | | | | 65x40 |
| 50-125/22 | ***2.2*** | 3 | | 17 | | | | | | | 15.4 | 14 | 12.8 | 11.5 | 6.5 | | | | | | | | 65x50 |
| 50-125/30 | ***3*** | 4 | | 20 | | | | | | | 18.8 | 18 | 17 | 15.6 | 11 | | | | | | | | 65x50 |
| 50-125/40 | ***4*** | 5.5 | | 24 | | | | | | | 23.1 | 23 | 21.5 | 203 | 15.8 | 11.8 | | | | | | | 65x50 |
| 50-160/55 | 5.5 | 7.5 | H(m) | 32 | | | | | | | 30.6 | 30 | 28 | 26.6 | 20.5 | 14.8 | | | | | | | 65x50 |
| 50-160/75 | 7.5 | 10 | | 40 | | | | | | | 38 | 37 | 36 | 34.4 | 29 | 24 | 21 | | | | | | 65x50 |
| 50-200/92 | 92 | 12.5 | | 50.5 | | | | | | | 46.8 | 45 | 43 | 40.9 | 32.5 | 26.7 | | | | | | | 6Sx50 |
| 50-200/110 | 11 | 15 | | 57.5 | | | | | | | 53.5 | 52 | 50 | 47.5 | 40 | 34 | 29 | | | | | | 65x50 |
| 50-200/150 | 15 | 20 | | 62 | | | | | | | 58 | 56.5 | 54.5 | 52 | 44.5 | 39 | 35.5 | | | | | | 65x50 |
| 50-250/150 | 15 | 20 | | 68.5 | | | | | | | 64 | 63 | 61.5 | 59 | 50 | 41 | | | | | | | 65x50 |
| 50-250/185 | 18.5 | 25 | | 79 | | | | | | | 75.8 | 74.8 | 74 | 71.5 | 63.5 | 55.5 | 47 | | | | | | 65x50 |
| 50-250/220 | ***22*** | 30 | | 89.5 | | | | | | | 86 | 85.3 | 84 | 81.5 | 73.5 | 6S.5 | 57 | | | | | | 6Sx50 |
| 65-125/40 | ***A*** | 5.5 | | 19 | | | | | | | | | 17.3 | 16.8 | 14.5 | 13 | 11.8 | | | | | | 80x65 |
| 65-125/55 | 5.5 | 7.5 | | 23 | | | | | | | | | 213 | 20.9 | 19 | 17.5 | 16.7 | 13.7 | | | | | 80x65 |
| 65-125/75 | 7.5 | 10 | | 27 | | | | | | | | | 26 | 25.6 | 24.5 | 23 | 22.5 | 20 | 18 | | | | 80x65 |
| 65-160/92 | 9.2 | 12.5 | | 33 | | | | | | | | | | 31.5 | 30 | 28 | 27.1 | 24 | 21.S | | | | 80x65 |
| 65-160/110 | 11 | 15 | | 36 | | | | | | | | | | 34.5 | 33 | 31.5 | 30,8 | 28 | 25.5 | | | | 80x65 |
| 65-160/150 | 15 | 20 | | 42 | | | | | | | | | | 41 | 40 | 38.5 | 37.8 | 35 | 33 | 29.5 | | | 80x65 |
| 65-200/150 | 15 | 20 | | 45 | | | | | | | | | | 45.5 | 43 | 41 | 40.2 | 36.5 | 34 | | | | 80x65 |
| 65-200/185 | 18.5 | 25 | | 52 | | | | | | | | | | 52.3 | 51 | 49 | 48.2 | 44.5 | 42 | | | | 80x65 |

| | | | | | | | | | | | | | | | | | | | | | | | |
|---|---|---|---|---|---|---|---|---|---|---|---|---|---|---|---|---|---|---|---|---|---|---|---|
| 65-200/220 | 22 | 30 | 59 | | | | | | | | | | | 59.5 | 58 | 56 | 55 | 52 | 49.5 | 44.5 | | | 80x65 |
| 65-250/220 | 22 | 30 | 64.8 | | | | | | | | | | | 64.7 | 62 | 60 | 58.5 | 53 | 50 | | | | 80x65 |
| 65-250/300 | ***30*** | 40 | 80 | | | | | | | | | | | 79.8 | 77.5 | 75.5 | 74.5 | 70 | 66 | 58 | | | 80x65 |
| 65-250/370 | ***37*** | 50 | 92 | | | | | | | | | | | 90.5 | 88.5 | 87 | 85 | 80.5 | 78 | 68 | | | 80x65 |
| 65-315/370 | ***37*** | 50 | 102 | | | | | | | | | | | 99.2 | ***97*** | 95 | 94.5 | 92.4 | 90 | 83 | | | 80x65 |
| 65-315/450 | 45 | 60 | 112 | | | | | | | | | | | 109.2 | 107.7 | 105.8 | 104.5 | 102.5 | 100 | 93 | 66 | | 80x65 |
| 65-315/550 | 55 | 75 | 122 | | | | | | | | | | | 119.2 | 117.4 | 115.7 | 114.5 | 112.5 | 110 | 103 | 76 | | 80x65 |
| 65-315/750 | 75 | 100 | 141 | | | | | | | | | | | 139.8 | 137.3 | 135.6 | 134.5 | 132.5 | 130 | 122 | 96 | 65.5 | 80x65 |
| 80-125/40 | 4 | 5.5 | 17 | | | | | | | | | 16.5 | 15.9 | 14.3 | 13.5 | 11.6 | 10 | 7.5 | | | | | 100x80 |
| 80-125/55 | 5.5 | 7.5 | 21 | | | | | | | | | 20.5 | 20 | 19 | 18 | 16.5 | 15 | 12.5 | 9.5 | | | | 100x80 |
| 80-125/75 | 7.5 | 10 | 26 | | | | | | | | | 25 | 25 | 24.5 | 23.8 | 22.5 | 21.5 | 19.5 | 16.5 | | | | 100x80 |

TECHICAL DATA/DATOS TECNICOS

50 HZ n=2900 1/min

| MODEL ***MODELO*** | **Power** ***Potencia*** | | us gpm | Q=DELIVERY/ ***CAUDAL*** | | | | | | | | | | | | | | | | | | | **DN** |
|---|---|---|---|---|---|---|---|---|---|---|---|---|---|---|---|---|---|---|---|---|---|---|---|
| | | | | 0 | 264 | 396 | 529 | 634 | 793 | 881 | 925 | 969 | 1057 | 1233 | 1322 | 1586 | 1762 | 2203 | 2643 | 3524 | 4405 | | |
| | | | l/min | 0 | 1000 | 1500 | 2000 | 2400 | 3000 | 3333 | 3500 | 3666 | 4000 | 4666 | 5000 | 6000 | 6666 | 8333 | 10000 | 13333 | 16666 | | |
| | kw | hp | m³/h | 0 | 60 | 90 | 120 | 144 | 180 | 200 | 210 | 220 | 240 | 280 | 300 | 360 | 400 | 500 | 600 | 800 | 1000 | | mm |
| 80-160/110 | " | 15 | | 27 | ***27*** | 273 | 24.5 | 21.1 | 16 | | | | | | | | | | | | | | 100x80 |
| 80-160/150 | 15 | 20 | | 32.8 | 32.6 | 32.5 | 30.2 | 27 | 22.1 | 18.5 | 16.7 | | | | | | | | | | | | 100x80 |
| 80-160/185 | 18.5 | 25 | | 39 | 38.5 | 38 | 36.7 | 33.6 | 28.8 | 25.3 | 23.5 | | | | | | | | | | | | 100x80 |
| 80-160/220 | 22 | 30 | | 44 | 43.5 | 43 | 41.7 | 38.6 | 33.8 | 30.3 | 28.5 | | | | | | | | | | | | 100x80 |
| 80-200/220 | 22 | 30 | | 48 | 47.7 | 47.5 | 43.5 | 39.2 | 32.5 | 27.2 | 24.5 | | | | | | | | | | | | 100x80 |
| 80-200/300 | 30 | 40 | | 60 | 59.7 | 59.5 | 57 | 53.1 | 47 | 42.7 | 40.5 | | | | | | | | | | | | 100x80 |
| 80-250/370 | 37 | 50 | | 71.5 | 70.9 | 70.5 | 65.5 | 59.3 | 51 | 43.2 | 38.5 | | | | | | | | | | | | 100x80 |
| 80-250/450 | 45 | 60 | | 88 | 86.7 | 86 | 83.6 | 78.5 | 70.5 | 60 | 51 | | | | | | | | | | | | 100x80 |
| 80-250/550 | 55 | 75 | | 94.5 | 94.5 | 94.5 | 91.8 | 87 | 79.5 | 72.1 | 68.3 | | | | | | | | | | | | 100x80 |
| 80-315/450 | 45 | 60 | | 85 | 84 | 82.6 | 82 | 78 | 68.3 | 61 | 56 | | | | | | | | | | | | 100x80 |
| 80-315/550 | 55 | 75 | | 98 | 97 | 95.6 | 95 | 91 | 81.3 | 74 | 69 | | | | | | | | | | | | 100x80 |
| 80-315/750 | 75 | 100 | | 124 | 123 | 121.6 | 121 | 117 | 107.3 | 100 | 95 | 90 | 80.8 | | | | | | | | | | 100x80 |
| 80-315/900 | 90 | 125 | | 144 | 143 | 141.6 | 141 | 137 | 1273 | 120 | 115 | 110 | 100.8 | | | | | | | | | | 100x80 |
| 100-160/150 | 15 | 20 | | 35 | 33.5 | 32.5 | 30 | 27.8 | 24.5 | 21.5 | 20 | 183 | 15 | | | | | | | | | | 125x100 |
| 100-160/185 | 18.5 | 25 | | 38.5 | 37.5 | 36.5 | 34.3 | 32.2 | 29 | 25.7 | 24 | 22 | 18 | | | | | | | | | | 125x100 |
| 100-160/220 | 22 | 30 | | 43 | 41 | 40 | 37.6 | 35.2 | 31.5 | 28.5 | 27 | 25.3 | ***22*** | | | | | | | | | | 125x100 |
| 100-200/220 | ***22*** | 30 | | 38.5 | 36.7 | 35.7 | 33.8 | 31.7 | 28.5 | 26.8 | 26 | 25 | 22.9 | 163 | 13 | | | | | | | | 125x100 |
| 100-200/300 | 30 | 40 | | 44.5 | 42.5 | 42 | 40.2 | 38.8 | 36.7 | 34.2 | 33 | 31.7 | 29 | 21.7 | 18 | | | | | | | | 125x100 |
| 100-200/370 | 37 | 50 | | 55 | S3 | 51 | S0.6 | 49.2 | 47 | 45 | 44 | 42.8 | 40.5 | 32.8 | 29 | | | | | | | | 125x100 |
| 100-250/450 | 45 | 60 | | 65 | 65 | 64 | 63 | 61 | 58 | 56 | 55 | 533 | 50 | 39 | 33.5 | | | | | | | | 125x100 |
| 100-250/550 | 55 | 75 | | 77 | 76 | 75.5 | 75 | 73.8 | 72 | 71.7 | 71.5 | 70.7 | 69 | 62.3 | 59 | | | | | | | | 125x100 |
| 100-250/750 | 75 | 100 | | 91 | 91 | 90.5 | 89.7 | 88 | 85.5 | 84 | 833 | 81.5 | 78 | 71.7 | 68.5 | 48 | | | | | | | 125x100 |
| 100-315/550 | 55 | 75 | | 80 | | | 79 | 77.4 | 75 | 74 | 73.5 | ***73*** | 71.3 | 68 | 66 | 60 | | | | | | | 125x100 |
| 100-315/750 | 75 | 100 | | 100 | | | 99 | 97.4 | 95 | 94 | 93.5 | 93 | 91.3 | 88 | 86 | 80 | | | | | | | 125x100 |
| 100-315/900 | 90 | 125 | | 118 | | | 116.5 | 114.7 | 112 | 111 | 110.8 | 110.5 | 108.7 | 106 | 104 | 98 | | | | | | | 125x100 |
| 100-315/1100 | 110 | 150 | | 138 | | | 136.5 | 134.7 | 132 | 131 | 130.8 | 130.S | 128.7 | 126 | 124 | 118 | | | | | | | 125x100 |

| | | | | | | | | | | | | | | | | | | | | | | |
|---|---|---|---|---|---|---|---|---|---|---|---|---|---|---|---|---|---|---|---|---|---|---|
| 125*200/450 | 45 | 60 | H(m) | 39.8 | | | 39.3 | 39.2 | 39 | 38.9 | 38.9 | 38.8 | 37.5 | 35 | 34 | 28.6 | 25 | | | | | 150x125 |
| 125-200/550 | 55 | 75 | | 49.8 | | | 493 | 49.2 | 49 | 48.9 | 48.9 | 48.8 | 47.5 | 45 | 44 | 38.6 | 3S | | | | | 150x125 |
| 125-200/750 | 75 | 100 | | 60.8 | | | 603 | 60.2 | 60 | 59.9 | 59.9 | 59.8 | 58.5 | 56 | 55 | 49.6 | 46 | | | | | 150x125 |
| 125-250/550 | 55 | 75 | | 70 | | | 67 | 65 | 64 | 63 | 62 | 61 | 59.5 | 57 | 56 | 53 | | | | | | 150x125 |
| 125-250/750 | 75 | 100 | | 80 | | | 77 | 75 | 74 | 73 | 72 | 71 | 69.8 | 67.1 | 66.2 | 63 | 58.5 | | | | | 150x125 |
| 125-250/900 | 90 | 125 | | 87 | | | 84 | 82 | 81 | 80 | 79 | 78 | 77 | 74.5 | 73.5 | 70.2 | 65.7 | | | | | 150x125 |
| 125-250/1100 | 110 | 150 | | 97 | | | 94 | 92 | 91 | 90 | 89 | 88 | 87 | 84.6 | 83.9 | 80.4 | 76 | | | | | 150x125 |
| 125-315/900 | 90 | 125 | | 89 | | | | | | 87 | 86 | 85 | 83.7 | 81.5 | 81 | 77 | 74 | 61 | | | | 150x125 |
| 125-315/1100 | 110 | 150 | | 103 | | | | | | 101 | 100 | 99 | 97.8 | 95.5 | 95 | 91.5 | 88.2 | 75.6 | | | | 150x125 |
| 12S-315/1320 | 132 | 180 | | 118 | | | | | | 116 | 115 | 114 | 112.5 | 110.5 | 110.3 | 106.5 | 103.2 | 91 | | | | 150x125 |
| 125-315/1600 | 160 | 220 | | 138 | | | | | | 136.8 | 135.9 | 135 | 133.7 | 131.5 | 131 | 127.5 | 124.2 | 112 | | | | 150x125 |
| 150-200/750 | 75 | 100 | | 50 | | | | | | | | 48 | 47.9 | 47.6 | 47.2 | 46.7 | 46.4 | 40.6 | 36.8 | 25.2 | | 200x150 |
| 150-200/900 | 90 | 125 | | 56 | | | | | | | | 54 | 53.9 | 53.6 | 53.2 | 52.7 | 52.4 | 48 | 42.8 | 31.2 | | 200x150 |
| 150-200/1100 | 110 | 150 | | 65.2 | | | | | | | | 62 | 61.7 | 61.2 | 60.8 | 59.8 | 592 | 57.2 | 54 | 46 | | 200x150 |
| 150-250/1100 | 110 | 150 | | 67 | | | | | | | | | | | 64.2 | 62 | 60.6 | 55.8 | 49.8 | 33.8 | | 200x150 |
| 150-250/1320 | 132 | 180 | | 80.2 | | | | | | | | | | | 78.2 | 76.3 | 75 | 70.6 | 65 | 50.2 | 29.8 | 200x150 |
| 150-250/1600 | 160 | 220 | | 90 | | | | | | | | | | | 88.4 | 87 | 86 | 82 | 77.2 | 62.4 | 42 | 200x150 |
| 150-315/1600 | 160 | 220 | | 92 | | | | | | | | | | | 90 | 88.3 | 872 | 82.8 | 76.8 | 60.4 | | 200x150 |
| 150-315/2000 | 200 | 270 | | 111 | | | | | | | | | | | 110.6 | 108.7 | 107.4 | 103.4 | 982 | 83.4 | 62.2 | 200x150 |
| 150-315/2500 | 250 | 340 | | 135 | | | | | | | | | | | 135.4 | 133.7 | 132.6 | 128.6 | 123.8 | 110.2 | 91 | 200x150 |

## MATERIAL DESCRIPTION / *DESCRIPCJOJ^DEMATERIAL*

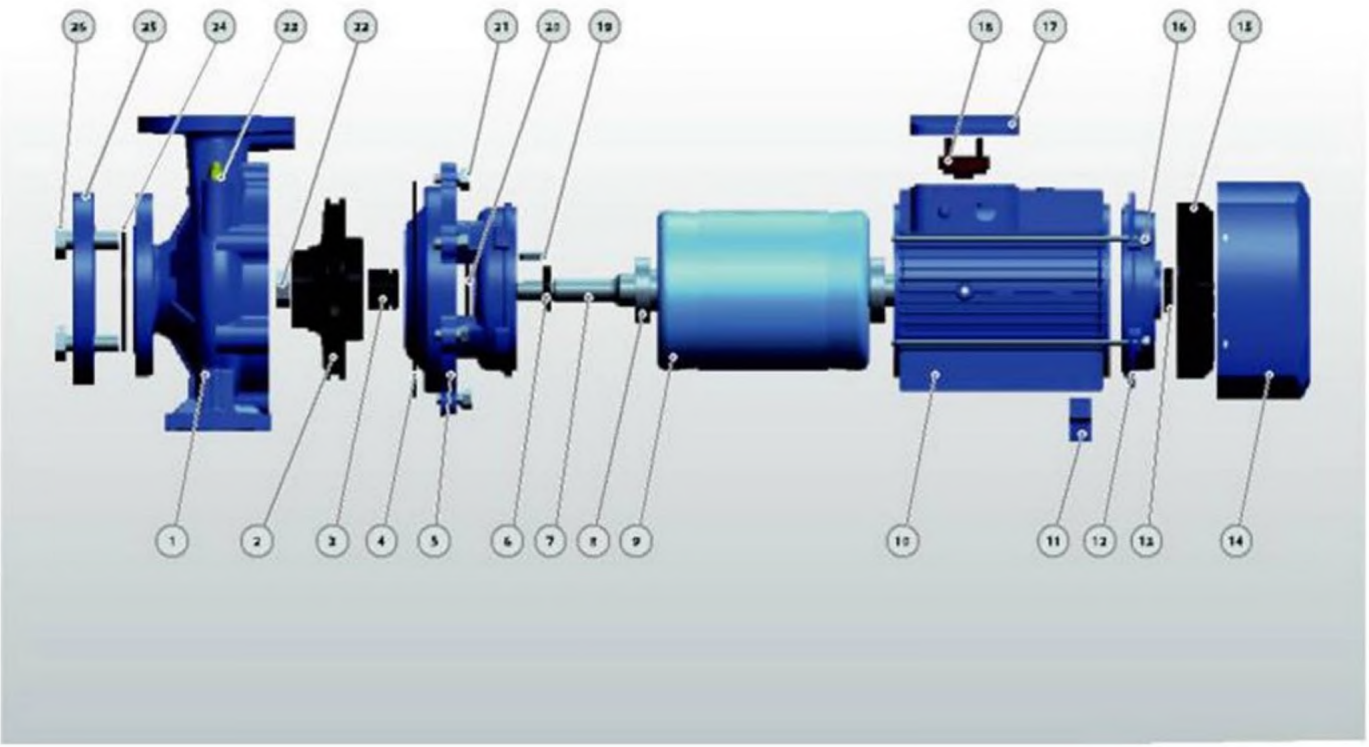

| No. | Description<br>*Descripcidn* | Material<br>*Material* | No. | Description<br>*Descripcidn* | Material<br>*Material* | No. | Description<br>*Descripcion* | Material<br>*Material* |
|---|---|---|---|---|---|---|---|---|
| 1 | Pump Case<br>*Cuerpo de Bomba* | Cast iron<br>*Fundlci6n* | 10 | Motor Case<br>*Cuerpo de Motor* | Aluminum<br>*Aluminio* | 19 | Impeller Key<br>*Chaveta Impulsor* | kon<br>*Hierro* |
| 2 | Impeller<br>*Impulsor* | SS304/Cast iron<br>*Inox 304/Fundici6n* | 11 | Support Foot<br>*Soporte Pie* | Plastic<br>*Pl6stico* | 20 | Water Deflector<br>*Deflector* | Rubber<br>*Caucho* |
| 3 | Mechanical Seal<br>*Cierre Mecdnico* | SiC/Cart>on/SS304<br>*SiC-Grafito-Inox304* | 12 | Back Cover<br>*Tapa Trasera* | Cast iron<br>*Fundicl6n* | 21 | Connection Bolt<br>*Pemo* | Steel<br>*Acero* |
| 4 | O-ring<br>*Junta T6rica* | *Rubber*<br>*Caucho* | 13 | Reinforced Seal<br>*Sello Reforzado* | Rubber<br>*Caucho* | 22 | Impeller Nut<br>*Tuerca de Impulsor* | Galvanizated Steel<br>*Acero Galvanizado* |
| 5 | Connection<br>*Conexidn* | Cast iron<br>*Fundici6n* | 14 | Fan Cover<br>*Tapa Ventilador* | Aluminum<br>*Aluminio* | 23 | Release Valve<br>*Tapdn Cebado* | Brass<br>*Bronce* |
| 6 | Reinforced Seal<br>*Sello Reforzado* | Rubber<br>*Caucho* | 15 | Fan<br>*Ventilador* | Plastic<br>*Pl^stico* | 24 | Gasket<br>*Empague* | Rubber<br>*Caucho* |
| 7 | Shaft<br>*Eje* | SS304/45# Steel<br>*Inox 304/45 ⊮ Hierro* | 16 | Through Bolt<br>*Pemo* | Steel<br>*Acero* | 25 | Counter Flange<br>*Contra Brida* | Galvanizated Cast iron<br>*Fundicidn Galvanizado* |
| 8 | Bearing<br>*Rodamiento* | Ball Bearing<br>*Bola Rodamiento* | 17 | Terminal Box<br>*Caja de Bomas* | Aluminum<br>*Aluminio* | 26 | Flange Bolt<br>*Pemo de Brids* | Steel<br>*Acero* |
| 9 | Wound Stator/Rotor<br>*Estator / Rotor* | Silicon Steel/Copper<br>*Acero al Silicio/Cobre* | 18 | *Terminal Board*<br>*Tablero de Bomas* | Plastic<br>*PIAstico* | | | |

## MATERIAL DESCRIPTION / *DESCRIPCIOŃ DE MA TERIAL*

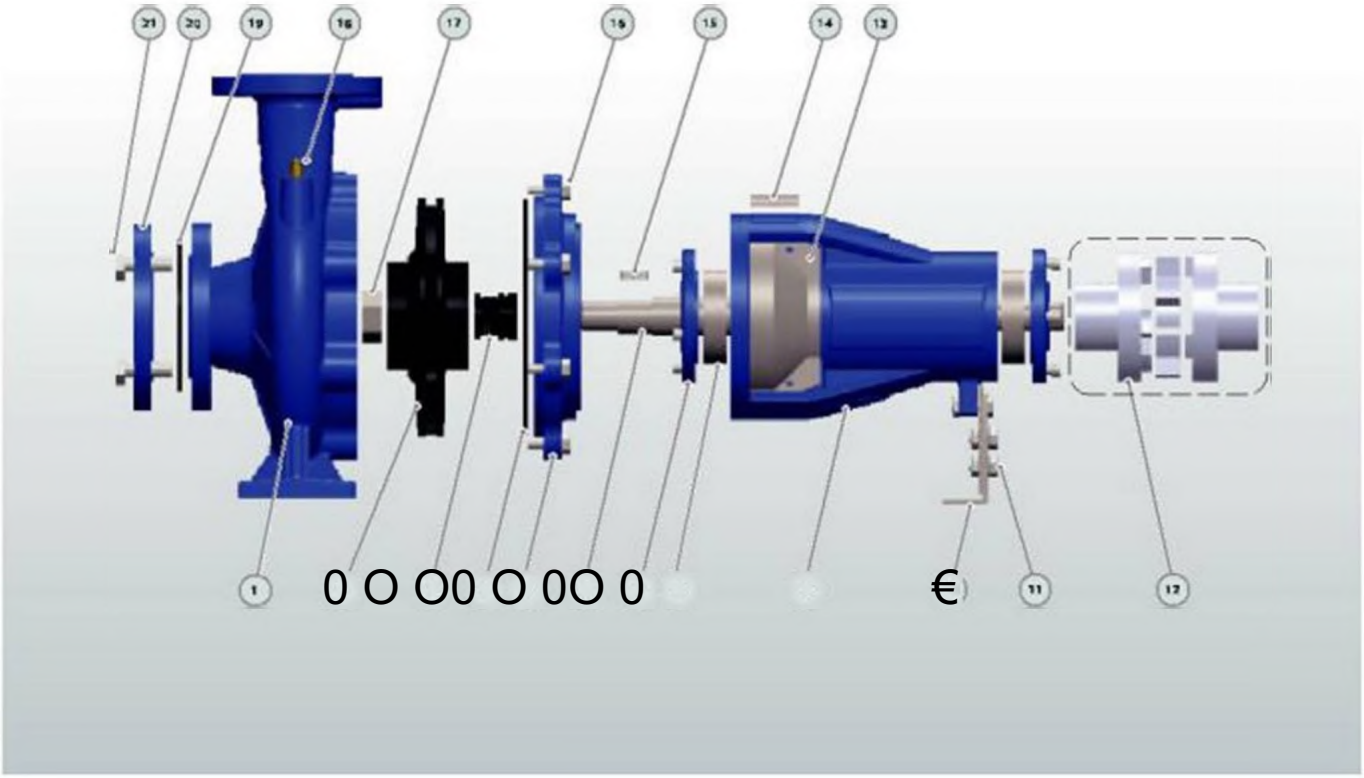

| No. | Description<br>*Deacripcion* | Material<br>*Material* | No. | Description<br>*Descripcion* | Material<br>*Material* | No. | Description<br>*Descripcion* | Material<br>*Material* |
|---|---|---|---|---|---|---|---|---|
| 1 | Pump Case<br>*Cuerpo de Bomba* | Cast iron<br>*FundM6n* | 8 | Bearing<br>*Rodamiento* | Ball Bearing<br>*Bota Rodamiento* | 15 | Impeller Key<br>*Chaveta Impulsor* | Iron<br>*Hierro* |
| 2 | Impeller<br>*Impulsor* | SS^04/Ca$I iron<br>*Inox 304/Fundici6n* | 9 | Support Case<br>*Cuerpo Sopcrte* | Cast iron<br>*Fumfici6n* | 16 | Connection Bolt<br>*Pemo* | Steel<br>*Acero* |
| 3 | Mechanical Seal<br>*Cierre Mecinico* | SiC/Cartx>n/SS304<br>*SiC-GrafitQ-Inox304* | 10 | Support Foot<br>*Soporte Pie* | Iron<br>*Hierro* | 17 | Impeller Nut<br>*Tuercs de Impulsw* | Galvanizated Steel<br>*Acero Galvanizado* |
| 4 | O-ring<br>*Junta T6rica* | *Rubber*<br>*Caucho* | 11 | Foot Bolt<br>*Pemo* | Steel<br>*Acero* | 18 | Release Valve<br>*Tap6n Cebado* | Brass<br>*Bronce* |
| 5 | Connection<br>*Conexidn* | Cast iron<br>*Fundici6n* | 12 | Coupling(Oplional)<br>*Uni6n(Opcional)* | Steel<br>*Acero* | 19 | Gasket<br>*Empague* | Rubber<br>*Caucho* |
| 6 | Shaft<br>*Eje* | SS304/45# Steel<br>*Inox 304/45U Hierro* | 13 | Case Cover<br>*Tapa Cuerpo* | SS304<br>*Inox304* | 20 | Counter Flange<br>*Contra Brida* | Galvanizated Cast iron<br>*FunditMn Galvanizado* |
| 7 | Be aring Cover<br>*Tapa Rodamiento* | Cast iron<br>*Fundici6n* | 14 | Nameplate<br>*Letrero* | Aluminum<br>*Aluminio* | 21 | Flange Bolt<br>*Pemo de Brida* | Steel<br>*Acero* |

## Product Specification (60HZ)


**NEW/NUEVO**

### TECHNICAL DESCRIPTION

■ New EN733 standard centrifugal pump
-Original design by PURITY (patented)
■ Both square motor & round motor available
-YE3 high efficient motor, with protection IP55 class F
-Pump case with anti-corrosive coating
■Impeller in stainless steel AISI 304 or cast iron
■ Shaft in stainless steel AISI 304 or galvanized iron
■ Galvanized counter flange with bolts, nuts and gaskets
• Quality NSK bearing, wear resistance mechanical seal

### APPLICATIONS

■ Suitable for use with clean water and liquids that are not chemically
■ aggressive towards the materials from which the pump is made.
■ The EN733 centrifugal pumps are recommended for use in water supply,
■ cleaning sets, pressure boosting, firefighting sets, irrigation, industrial
■ applications, water circulation in climatisation sets, agricultural.

### USING LIMITS

■ Liquid temperature between -10°C and +120°C
■ Ambient temperature up to +50°C
■ Max. working pressure 16 bar
■ Continuous service S1

### PATENTS

-Registered model PST
-Registered Patent Design n 201530478502.0

| DISCHARGE SIZE *DE DESCARGA* | IMPELLER SIZE *DEL IMPULSE* | | | | | | |
|---|---|---|---|---|---|---|---|
| | **125** | **160** | **200** | **250** | **250D** | **315** | **400** |
| **32** | SS304 | SS304 | SS304 | Cast iron | SS304 | | |
| **40** | Cast iron | Cast iron | SS304 | Cast iron | / | | |
| **50** | Cast iron | Cast iron | Cast iron | Cast iron | / | | |
| **65** | Cast iron | Cast iron | Cast iron | Cast iron | / | Cast iron | |
| **80** | Cast iron | Cast iron | Cast iron | Cast iron | / | Cast iron | Cast iron |
| **100** | | Cast iron | Cast iron | Cast iron | / | Cast iron | Cast iron |
| **125** | | | Cast iron | Cast iron | / | Cast iron | Cast iron |
| **150** | | | Cast iron | Cast iron | / | Cast iron | Cast iron |
| **200** | | | | Cast iron | / | Cast iron | Cast iron |
| **250** | | | | | / | Cast iron | Cast iron |

## TECHNICAL DATA / *DATOS T^CNICOS*

**60 HZ n=35001/min**

| MODEL *MODELO* | Power *Potencia* | | US gpm | Q=DEUVERY/*CAUDAL* | | | | | | | | | | | | | | | | | | | | DN |
|---|---|---|---|---|---|---|---|---|---|---|---|---|---|---|---|---|---|---|---|---|---|---|---|---|
| | | | | 0 | 26 | 40 | 66 | 79 | 106 | 119 | 159 | 185 | 211 | 238 | 317 | 370 | 396 | 476 | 529 | 608 | 793 | 925 | | |
| | | | l/min | 0 | 100 | 150 | 250 | 300 | 400 | 450 | 600 | 700 | 800 | 900 | 1200 | 1400 | 1500 | 1800 | 2000 | 2300 | 3000 | 3500 | | |
| | kw | hp | m'/h | 0 | 6 | 9 | 15 | 18 | 24 | 27 | 36 | 42 | 48 | 54 | 72 | 84 | 90 | 108 | 120 | 138 | 180 | 210 | | mm |
| 32-125/07 o | 0.75 | 1 | | 17.5 | 16.7 | 15 | 12 | 9 | | | | | | | | | | | | | | | | 50x32 |
| 32-125/11 o | LI | L5 | | 22 | 21 | 19.7 | 16.5 | 14.5 | 9 | | | | | | | | | | | | | | | 50x32 |
| 32-160/15 • | L5 | 2 | | 25.4 | 23.7 | 225 | 18.5 | 15.8 | | | | | | | | | | | | | | | | 50x32 |
| 32-160/22 • | 22 | 3 | | 31 | 29.6 | 28.5 | 24.5 | 22 | 15 | | | | | | | | | | | | | | | 50x32 |
| 32-160/30 • | 3 | 4 | | 35 | 34.3 | 34 | 28 | 25.5 | 19 | 15 | | | | | | | | | | | | | | 50x32 |
| 32-200/30 • | ***3*** | 4 | | 44.2 | 43 | 39.8 | 35.2 | 32.2 | 24.6 | 19.8 | | | | | | | | | | | | | | 50x32 |
| 32-200/40 • | 4 | 5.5 | | 54.5 | 52 | 50 | 45.5 | 4L9 | 35 | 30.3 | | | | | | | | | | | | | | 50x32 |
| 32-250/55 • | 5.5 | 7.5 | | 60 | 59.5 | 59 | 55 | 53 | 49 | 46 | | | | | | | | | | | | | | 50x32 |
| 32-250/75 • | 7.5 | 10 | | 75 | 74.5 | 74.3 | 73.5 | 72.5 | 68.5 | 67.3 | 60 | | | | | | | | | | | | | 50x32 |
| 32-250/110 • | 11 | 15 | | 90 | 87.5 | 85.8 | 82 | 79 | 75 | 72 | 65 | | | | | | | | | | | | | 50x32 |
| 32-250/55Do | 5.5 | 7.5 | | 79.5 | 77 | 74 | 70 | 66 | 54 | 42 | | | | | | | | | | | | | | 50x32 |
| 32-250/75DO | 7.5 | 10 | | 95 | 93 | 91 | 87 | 83 | 75 | 70 | 32 | | | | | | | | | | | | | 50x32 |
| 40-125/11 o | LI | L5 | | 14.7 | | | | 13.5 | 11.5 | 10.1 | 5.8 | | | | | | | | | | | | | 65x40 |
| 40-125/15 o | L5 | 2 | | 18.1 | | | | 17 | 15 | 13.9 | 9.6 | 6 | | | | | | | | | | | | 65x40 |
| 40-125/22 © | ***2.2*** | 3 | | 24.5 | | | | 23.2 | 21.5 | 20.2 | 16 | 13 | 83 | | | | | | | | | | | 65x40 |
| 40-160/30 • | ***3*** | 4 | | 3L8 | | | | 29.5 | 275 | 26.3 | 2L5 | 17.5 | | | | | | | | | | | | 65x40 |
| 40 160/40 • | 4 | 5.5 | | 38 | | | | 36 | 34 | 33 | 28.5 | 25 | 20.1 | | | | | | | | | | | 65x40 |
| 40-200/55 • | 5.5 | 7.5 | | 46 | | | | 43.8 | 413 | 40.1 | 35 | 30 | | | | | | | | | | | | 65x40 |
| 40-200/75 • | 7.5 | 10 | | 57 | | | | 53.6 | 51.5 | 50 | 45 | 41 | 36.5 | | | | | | | | | | | 65x40 |
| 40-250/92 • | 9.2 | 12.5 | | 64 | | | | 59 | 56.5 | 55 | 49.5 | 45 | 39.8 | | | | | | | | | | | 65x40 |
| 40-250/110 • | 11 | 15 | | 78 | | | | 75 | 73 | 72 | 67 | 63 | 56 | 43 | | | | | | | | | | 65x40 |
| 40-2S0/150 • | 15 | 20 | | 88.5 | | | | 83.5 | 80.5 | 79 | 74 | 70.5 | 65 | 52 | | | | | | | | | | 65x40 |
| 50-125/22 • | 22 | 3 | | 17 | | | | | | | 15.4 | 14 | 12.8 | 1L5 | 6.5 | | | | | | | | | 65x50 |
| 50-125/30 • | 3 | 4 | | 20 | | | | | | | 18.8 | 18 | 17 | 15.6 | 11 | | | | | | | | | 65x50 |
| 50 -125/40 • | 4 | 5.5 | | 24 | | | | | | | 23.1 | 23 | 2L5 | 20.3 | 15.8 | 1L8 | | | | | | | | 65x50 |
| 50-160/55 • | 5.5 | 7.5 | H(m) | 32 | | | | | | | 30.6 | 30 | 28 | 26.6 | 20.5 | 14.8 | | | | | | | | 65x50 |
| 50160/75 • | 7.5 | 10 | | 40 | | | | | | | 38 | 37 | 36 | 34.4 | 29 | 24 | 21 | | | | | | | 65x50 |
| 50-200/92 • | 9.2 | 12.5 | | 50.5 | | | | | | | 46.8 | 45 | 43 | 40.9 | 32.5 | 26.7 | | | | | | | | 65x50 |
| 50-200/110 • | 11 | 15 | | 57.5 | | | | | | | 53.5 | 52 | 50 | 47.5 | 40 | 34 | 29 | | | | | | | 65x50 |
| 50-200/1S0 • | 15 | 20 | | 62 | | | | | | | 58 | 56.5 | 54.5 | 52 | 44.5 | 39 | 35.5 | | | | | | | 65x50 |
| 50-250/150 • | 15 | 20 | | 68.5 | | | | | | | 64 | 63 | 6L5 | 59 | 50 | 41 | | | | | | | | 65x50 |
| 50-250/185 • | 18.5 | 25 | | 79 | | | | | | | 75.8 | 74.8 | 74 | 71.5 | 63.5 | 55.5 | 47 | | | | | | | 65x50 |
| 50-250/220 • | 22 | 30 | | 89.5 | | | | | | | 86 | 85.3 | 84 | 8L5 | 73.5 | 65.5 | 57 | | | | | | | 65x50 |
| 65-125/40 • | 4 | 5.5 | | 19 | | | | | | | | | 173 | 16.8 | 14.5 | 13 | 1L8 | | | | | | | 80x65 |
| 65-125/55 • | 5.5 | 7.5 | | 23 | | | | | | | | | 2L3 | 20.9 | 19 | 17.5 | 16.7 | 13.7 | | | | | | 80x65 |
| 65-125/75 • | 7.5 | 10 | | 27 | | | | | | | | | 26 | 25.6 | 24.5 | 23 | 22.5 | 20 | 18 | | | | | 80x65 |
| 65-160/92 • | 9.2 | 12.5 | | 33 | | | | | | | | | | 3L5 | 30 | 28 | 27.1 | 24 | 2L5 | | | | | 80x65 |
| 65-160/110* | 11 | 15 | | 36 | | | | | | | | | | 34.5 | 33 | 3L5 | 30.8 | 28 | 25.5 | | | | | 80x65 |
| 65-160/150 • | 15 | 20 | | 42 | | | | | | | | | | 41 | 40 | 38.5 | 37.8 | 35 | 33 | 29.5 | | | | 80x65 |
| 65-200/150 • | 15 | 20 | | 45 | | | | | | | | | | 45.5 | 43 | 41 | 40.2 | 36.5 | 34 | | | | | 80x65 |
| 65-200/185 • | 18.5 | 25 | | 52 | | | | | | | | | | 523 | 51 | 49 | 48.2 | 44.5 | 42 | | | | | 80x65 |
| 65-200/220 • | 22 | 30 | | 59 | | | | | | | | | | 59.5 | 58 | 56 | 55 | 52 | 49.5 | 44.5 | | | | 80x65 |
| 65-250/220 • | 22 | 30 | | 64.8 | | | | | | | | | | 64.7 | 62 | 60 | 58.5 | 53 | 50 | | | | | 80x65 |
| 65-250/300 • | 30 | 40 | | 80 | | | | | | | | | | 79.8 | 77.5 | 75.5 | 74.5 | 70 | 66 | 58 | | | | 80x65 |
| 65-250/370 • | 37 | 50 | | 92 | | | | | | | | | | 90.5 | 88.5 | 87 | 85 | 80.5 | 78 | 68 | | | | 80x65 |
| 65-315/370 • | 37 | 50 | | 102 | | | | | | | | | | 99.2 | 97 | 95 | 94.5 | 924 | 90 | 83 | | | | 80x65 |
| 65-315/450 • | 45 | 60 | | 112 | | | | | | | | | | 109.2 | 107.7 | 105.8 | 104.5 | 102.5 | 100 | 93 | 66 | | | 80x65 |
| 65-315/550 • | 55 | 75 | | 122 | | | | | | | | | | 119.2 | 117.4 | 115.7 | 114.5 | 112.5 | 110 | 103 | 76 | | | 80x65 |
| 65-315/750 • | 75 | 100 | | 141 | | | | | | | | | | 139.8 | 137.3 | 135.6 | 134.5 | 132.5 | 130 | 122 | 96 | 65.5 | | 80x65 |
| 80 -125/40 • | 4 | 5.5 | | 17 | | | | | | | | | 16.5 | 15.9 | 14.3 | 13.5 | 1L6 | 10 | 75 | | | | | 100x80 |
| 80-125/55 • | 5.5 | 7.5 | | 21 | | | | | | | | | 20.5 | 20 | 19 | 18 | 16.5 | 15 | 125 | 9.5 | | | | 100x80 |
| 80-125/75 • | 7.5 | 10 | | 26 | | | | | | | | | 25 | 25 | 24.5 | 23.8 | 225 | 2L5 | 19.5 | 16.5 | | | | 100x80 |

**° = PST available ᵉ =PS available · =PST&PS available/drspo/wb/e**

## TECHNICAL DATA / *DATOS T^CNICOS*

**60 HZ n=35001/min**

| MODEL *MODELO* | Power *Potencia* | | us gpm | Q=DELIVERY/C>4(/D>4£ | | | | | | | | | | | | | | | | | | DN |
|---|---|---|---|---|---|---|---|---|---|---|---|---|---|---|---|---|---|---|---|---|---|---|
| | | | | 0 | 264 | 396 | 529 | 634 | 793 | 881 | 925 | 969 | 1057 | 1233 | 1322 | 1586 | 1762 | 2203 | 2643 | 3524 | 4405 | |
| | | | l/min | 0 | 1000 | 1500 | 2000 | 2400 | 3000 | 3333 | 3500 | 3666 | 4000 | 4666 | 5000 | 6000 | 6666 | 8333 | 10000 | 13333 | 16666 | |
| | kw | hp | $m^5/h$ | 0 | 60 | 90 | 120 | 144 | 180 | 200 | 210 | 220 | 240 | 280 | 300 | 360 | 400 | 500 | 600 | 800 | 1000 | mm |
| 80-160/110 • | 11 | 15 | | 27 | 27 | 273 | 24.5 | 2L1 | 16 | | | | | | | | | | | | | 100x80 |
| 80-160/150 • | 15 | 20 | | 32.8 | 32.6 | 325 | 302 | 27 | 221 | 18.5 | 16.7 | | | | | | | | | | | 100x80 |
| 80-160/185 • | 18.5 | 25 | | 39 | 385 | 38 | 36.7 | 33.6 | 28.8 | 253 | 23.5 | | | | | | | | | | | 100x80 |
| 80-160/220 • | 22 | 30 | | 44 | 43.5 | 43 | 41.7 | 38.6 | 33.8 | 303 | 28.5 | | | | | | | | | | | 100x80 |
| 80-200/220 • | 22 | 30 | | 48 | 47.7 | 475 | 435 | ***39.2*** | 325 | 272 | 24.5 | | | | | | | | | | | 100x80 |
| 80-200/300 • | 30 | 40 | | 60 | 59.7 | 59.5 | 57 | ***53.1*** | 47 | 42.7 | 40.5 | | | | | | | | | | | 100x80 |
| 80-250/370 • | 37 | 50 | | 7L5 | 70.9 | 70.5 | 65.5 | ***59.3*** | 51 | 432 | 38.5 | | | | | | | | | | | 100x80 |
| 80-250/450 • | 45 | 60 | | 88 | 86.7 | 86 | 83.6 | 78.5 | 70.5 | 60 | 51 | | | | | | | | | | | 100x80 |
| 80-250/550 • | 55 | 75 | | 94.5 | 94.5 | 94.5 | 91.8 | 87 | 79.5 | 72.1 | 683 | | | | | | | | | | | 100x80 |
| 80-315/450 • | 45 | 60 | | 85 | 84 | 826 | 82 | 78 | 683 | 61 | 56 | | | | | | | | | | | 100x80 |
| 80-315/550 • | 55 | 75 | | 98 | 97 | 95.6 | 95 | 91 | 8L3 | 74 | 69 | | | | | | | | | | | 100x80 |
| 80-315/750 • | 75 | 100 | | 124 | 123 | 12L6 | 121 | 117 | 1073 | 100 | 95 | 90 | 80.8 | | | | | | | | | 100x80 |
| 80-315/900 • | 90 | 125 | | 144 | 143 | 14 L6 | 141 | 137 | 127.3 | 120 | 115 | 110 | 1003 | | | | | | | | | 100x80 |
| 100-160/150 • | 15 | 20 | | 35 | 335 | 325 | 30 | 27.8 | 24.5 | 21.5 | 20 | 183 | 15 | | | | | | | | | 125x100 |
| 100-160/185 • | 18.5 | 25 | | 38.5 | 375 | 36.5 | 343 | ***32.2*** | 29 | 25.7 | 24 | 22 | 18 | | | | | | | | | 125x100 |
| 100-160/220 • | 22 | 30 | | 43 | 41 | 40 | 37.6 | ***35.2*** | 3L5 | 28.5 | 27 | 253 | 22 | | | | | | | | | 125x100 |
| 100-200/220 • | 22 | 30 | | 38.5 | 36.7 | 35.7 | ***333*** | ***3L7*** | 28.5 | 26.8 | 26 | 25 | 22.9 | 163 | 13 | | | | | | | 125x100 |
| 100-200/300 • | 30 | 40 | | 44.5 | 42.5 | 42 | ***402*** | ***38.8*** | ***36.7*** | 342 | 33 | 3L7 | 29 | 2L7 | 18 | | | | | | | 125x100 |
| 100-200/370 • | 37 | 50 | | 55 | 53 | 51 | 50.6 | ***49.2*** | ***47*** | 45 | 44 | 42.8 | 405 | 328 | 29 | | | | | | | 125x100 |
| 100-250/450 • | 45 | 60 | | 65 | 65 | 64 | 63 | 61 | 58 | 56 | 55 | ***53.3*** | 50 | 39 | 33.5 | | | | | | | 125x100 |
| 100-250/550 • | 55 | 75 | | 77 | 76 | 75.5 | 75 | 73.8 | 72 | 71.7 | 7L5 | ***70.7*** | 69 | 623 | 59 | | | | | | | 125x100 |
| 100-250/750 • | 75 | 100 | | 91 | 91 | 90.5 | 89.7 | 88 | 85.5 | 84 | 833 | 8L5 | 78 | 7L7 | 68.5 | 48 | | | | | | 125x100 |
| 100-315/550 • | 55 | 75 | | 80 | | | 79 | 77.4 | 75 | 74 | 73.5 | 73 | 713 | 68 | 66 | 60 | | | | | | 125x100 |
| 100-315/750 • | 75 | 100 | H(m) | 100 | | | 99 | 97.4 | 95 | 94 | 93.5 | 93 | 913 | 88 | 86 | 80 | | | | | | 125x100 |
| 100-315/900 • | 90 | 125 | | 118 | | | 1165 | 114.7 | 112 | 111 | 110.8 | 110.5 | 108.7 | 106 | 104 | 98 | | | | | | 125x100 |
| 100-315/1100 • | 110 | 150 | | 138 | | | 136.5 | 134.7 | 132 | 131 | 130.8 | 130.5 | 128.7 | 126 | 124 | 118 | | | | | | 125x100 |
| 125-200/450 • | 45 | 60 | | 39.8 | | | 393 | 39.2 | 39 | 38.9 | 38.9 | 38.8 | 37.5 | 35 | 34 | 28.6 | 25 | | | | | 150x125 |
| 125-200/550 • | 55 | 75 | | 49.8 | | | 493 | 49.2 | 49 | 48.9 | 48.9 | 48.8 | 47.5 | 45 | 44 | 38.6 | 35 | | | | | 150x125 |
| 125-200/750 • | 75 | 100 | | 60.8 | | | 603 | 60.2 | 60 | 59.9 | 59.9 | 59.8 | 58.5 | 56 | 55 | 49.6 | 46 | | | | | 150x125 |
| 125-250/550 · | 55 | 75 | | 70 | | | 67 | 65 | 64 | 63 | 62 | 61 | 59.5 | 57 | 56 | 53 | | | | | | 150x125 |
| 125-250/750 • | 75 | 100 | | 80 | | | 77 | 75 | 74 | 73 | 72 | 71 | 69.8 | 67.1 | 66.2 | 63 | 58.5 | | | | | 150x125 |
| 125-250/900 • | 90 | 125 | | 87 | | | 84 | 82 | 81 | 80 | 79 | 78 | 77 | 74.5 | 73.5 | 702 | 65.7 | | | | | 150x125 |
| 125-250/1100 · | 110 | 150 | | 97 | | | 94 | 92 | 91 | 90 | 89 | 88 | 87 | 84.6 | 83.9 | 80.4 | 76 | | | | | 150x125 |
| 125-315/900 • | 90 | 125 | | 89 | | | | | | 87 | 86 | 85 | 83.7 | 8L5 | 81 | 77 | 74 | 61 | | | | 150x125 |
| 125-315/1100 • | 110 | 150 | | 103 | | | | | | 101 | 100 | 99 | 973 | 95.5 | 95 | 91.5 | 88.2 | 75.6 | | | | 150x125 |
| 125-315/1320 • | 132 | 180 | | 118 | | | | | | 116 | 115 | 114 | 1125 | 110.5 | 110.3 | 106.5 | 103.2 | 91 | | | | 150x125 |
| 125-315/1600 • | 160 | 220 | | 138 | | | | | | ***136B*** | 135.9 | 135 | 1337 | 131.5 | 131 | 127.5 | 124.2 | 112 | | | | 150x125 |
| 150-200/750 • | 75 | 100 | | 50 | | | | | | | | 48 | 47.9 | 47.6 | 47.2 | 46.7 | 46.4 | 40.6 | 363 | 252 | | 200x150 |
| 150-200/900 • | 90 | 125 | | 56 | | | | | | | | 54 | 53.9 | 53.6 | 53.2 | 52.7 | 524 | 48 | 423 | ***312*** | | 200x150 |
| 150-200/1100 • | 110 | 150 | | 65.2 | | | | | | | | 62 | 61.7 | 6L2 | 60.8 | 593 | 59.2 | 572 | S4 | ***46*** | | 200x150 |
| 150-250/1100 · | 110 | 150 | | 67 | | | | | | | | | | | 64.2 | 62 | 60.6 | 55.8 | 493 | 333 | | 200x150 |
| 150-250/1320 • | 132 | 180 | | 80.2 | | | | | | | | | | | 78.2 | 763 | 75 | 70.6 | 65 | 502 | 29.8 | 200x150 |
| 150-250/1600 · | 160 | 220 | | 90 | | | | | | | | | | | 88.4 | 87 | 86 | 82 | ***772*** | 62.4 | 42 | 200x150 |
| 150-315/1600 • | 160 | 220 | | 92 | | | | | | | | | | | 90 | 883 | 87.2 | 82.8 | 763 | 60.4 | | 200x150 |
| 150-315/2000 • | 200 | 270 | | 111 | | | | | | | | | | | 110.6 | 108.7 | 107.4 | 103.4 | 982 | 83.4 | 622 | 200x150 |
| 150-315/2500 • | 250 | 340 | | 135 | | | | | | | | | | | 135.4 | 133.7 | 132.6 | 128.6 | 123.8 | 1102 | 91 | 200x150 |

**• =PS available · = PST&PS *availabke/disponible***

## TECHNICAL DATA / *DATOS T^CNICOS*

**60 HZ n=17501/min**

| MODEL *MODELO* | Power *Pnt^nria* kw | hp | us gpm | Q=DELIVERY/C>ia£M£ | | | | | | | | | | | | | | | | | | DN |
|---|---|---|---|---|---|---|---|---|---|---|---|---|---|---|---|---|---|---|---|---|---|---|
| | | | | 0 | 106 | 119 | 132 | 159 | 185 | 198 | 220 | 264 | 317 | 370 | 396 | 423 | 476 | 617 | 661 | 881 | 1101 | |
| | | | l/min | 0 | 400 | 450 | 500 | 600 | 700 | 750 | 833 | 1000 | 1200 | 1400 | 1500 | 1600 | 1800 | 2333 | 2500 | 3333 | 4166 | |
| | | | m³/h | 0 | 24 | 27 | 30 | 36 | 42 | 45 | 50 | 60 | 72 | 84 | 90 | 96 | 108 | 140 | 150 | 200 | 250 | mm |
| 65-160/11 • | LI | L5 | | 8 | 7.5 | 7A | 73 | 7 | 6.6 | 63 | 5.8 | 43 | 3.4 | | | | | | | | | 80x65 |
| 65-160/15 · | 15 | 2 | | 9 | 8.5 | 8.4 | 83 | 8 | 7.6 | 7.4 | 6.9 | 6 | 4.6 | | | | | | | | | 80x65 |
| 65-160/22 • | 22 | 3 | | 103 | 9.9 | 9.9 | 93 | 9.5 | 9.2 | 9 | 8.6 | 73 | 6.5 | 5 | | | | | | | | 80x65 |
| 65-200/15 • | 15 | 2 | | 10 | | | 9.6 | 9.1 | 8.5 | 8.2 | 7.6 | 6.4 | 4.6 | | | | | | | | | 80x65 |
| 65-200/22 • | 22 | 3 | | 12.4 | | | 122 | 11.8 | 113 | 11 | 10.4 | 93 | 7.6 | | | | | | | | | 80x65 |
| 65-200/30 • | 3 | 4 | | 14.4 | | | 143 | 133 | 13.4 | 13.1 | 125 | 113 | 9.6 | 7.S | | | | | | | | 80x65 |
| 65-250/30 • | 3 | 4 | | 15.4 | | | 14.6 | 13.9 | 13.1 | 126 | 1L6 | 9.7 | 6.7 | | | | | | | | | 80x65 |
| 65-250/40 • | 4 | 5.5 | | 19 | | | 183 | 173 | 17.2 | 16.9 | 16.1 | 14.4 | 1L7 | | | | | | | | | 80x65 |
| 65-250/55 • | 5.5 | 7.5 | | 223 | | | 213 | 20.9 | 20.3 | 19.9 | 19.2 | 17.7 | 15.1 | 12 | | | | | | | | 80x65 |
| 65-315/40 ♦ | 4 | 5.5 | | 18.6 | | | 173 | 173 | 16.7 | 16.2 | 15.2 | 133 | | | | | | | | | | 80x65 |
| 65-315/55 • | 5.5 | 7.5 | | 221 | | | | 212 | 20.6 | 20.2 | 19.2 | 173 | 14 | | | | | | | | | 80x65 |
| 65-315/75 · | 7.5 | 10 | | 26.5 | | | | 25.6 | 25.2 | 24.9 | 243 | 23 | 20.8 | 17.6 | | | | | | | | 80x65 |
| 65-315/110 • | 11 | 15 | | 34.8 | | | | 342 | 33.9 | 33.7 | 33.2 | 321 | 30.2 | 27.4 | 25.6 | 23.7 | 18.7 | | | | | 80x65 |
| 80-160/15 • | L5 | 2 | | 72 | | | | | | 7.1 | 6.9 | 6.4 | 5.5 | 4.6 | 4.1 | 3.5 | | | | | | 100x80 |
| 80-160/22 • | 2.2 | 3 | | 8.5 | | | | | | 8.6 | 8.4 | 8 | 7.4 | 6.6 | 62 | 5.7 | 5 | | | | | 100x80 |
| 80-200/30 • | 3 | 4 | | 1L2 | | | | | | 11 | 10.7 | 10.1 | 9.2 | 8 | 73 | 6.6 | | | | | | 100x80 |
| 80-200/40 • | 4 | 5.5 | | 13.8 | | | | | | 13.8 | 13.6 | 133 | 124 | 1L3 | 10.7 | 10 | 9 | | | | | 100x80 |
| 80-250/40 • | 4 | 5.5 | | 16.5 | | | | | | 16 | 15.6 | 143 | 13.2 | 1L4 | 102 | 9 | | | | | | 100x80 |
| 80-250/55 · | 5.5 | 7.5 | | 19.8 | | | | | | 19.5 | 19.1 | 18.4 | 17.2 | 15.5 | 14.5 | 13.5 | 1L1 | | | | | 100x80 |
| 80-250/75 • | 7.S | 10 | | 23.6 | | | | | | 23.5 | 23.2 | 225 | 213 | 19.9 | 19 | 18.1 | 16 | | | | | 100x80 |
| 80-250/110 • | 11 | 15 | | 27.6 | | | | | | 27.5 | 27.2 | 26.5 | 253 | 23.9 | 23 | 221 | 20 | 15 | | | | 100x80 |
| 80-315/55 • | 5.5 | 7.5 | | 19.7 | | | | | | 19.1 | 18.8 | 18.1 | 16.8 | 15 | 13.9 | 12.8 | 10.1 | | | | | 100x80 |
| 80-315/75 • | 7.5 | 10 | H(m) | 24.6 | | | | | | 23.9 | 23.6 | 23 | 2L9 | 20.4 | 195 | 18.6 | 163 | | | | | 100x80 |
| 80-315/110 • | 11 | 15 | | 29.9 | | | | | | 29.4 | 29.2 | 283 | 28.1 | 27 | 263 | 25.5 | 23.6 | 16.5 | 13.5 | | | 100x80 |
| 80-315/150 • | 15 | 20 | | 36.8 | | | | | | 36.4 | 36.1 | 35.6 | 34.7 | 33.6 | 33 | 324 | 30.9 | 253 | 23 | | | 100x80 |
| 80-400/185 • | 18.5 | 25 | | 403 | | | | | | 39.7 | 39.5 | 39.1 | 38.4 | 37.3 | 36.6 | 35.9 | 34.1 | 273 | 24.5 | | | 100x80 |
| 80-400/220 • | 22 | 30 | | 45.1 | | | | | | 44.6 | 44.5 | 442 | 43.6 | 426 | 42 | 4L4 | 39.8 | 33.4 | 30.7 | | | 100x80 |
| 80*400/300 • | 30 | 40 | | 55.1 | | | | | | 54.7 | 54.6 | 54.4 | 54 | 533 | 52.8 | 522 | 50.9 | 45.4 | 432 | | | 100x80 |
| 100-160/22 • | 22 | 3 | | 5S | | | | | | 5.8 | 5.7 | 55 | 53 | 5 | 4.9 | 4.6 | 4.3 | | | | | 125x100 |
| 100" 160/30 • | 3 | 4 | | 82 | | | | | | 8.1 | 8 | 7.9 | 7.6 | 7.3 | 72 | 6.9 | 6.5 | 5.1 | | | | 125x100 |
| 100-160/40 • | 4 | 5.5 | | 10 | | | | | | 10 | 9.9 | 9.7 | 9.4 | 9.1 | 9 | 8.7 | 8.3 | 6.9 | 63 | | | 125x100 |
| 100-200/40 • | 4 | 5.5 | | 11.8 | | | | | | 1L7 | 1L6 | 11.4 | 11 | 10.5 | 103 | 9.7 | 9.1 | 63 | 5.9 | | | 125x100 |
| 100-200/55 • | 5.5 | 7.5 | | 14.8 | | | | | | 14.7 | 14.7 | 14.5 | 14.2 | 13.9 | 133 | 13.5 | 13 | 111 | 103 | | | 125x100 |
| 100-250/55 • | 5.5 | 7.5 | | 15.9 | | | | | | 15.8 | 15.7 | 15.5 | 14.9 | 14.4 | 14.1 | 13.4 | 12.5 | 92 | 7.9 | | | 125x100 |
| 100-250/75 • | 7.5 | 10 | | 19.5 | | | | | | 19.5 | 19.4 | 192 | 18.8 | 183 | 18.1 | 17.6 | 16.9 | 14 | 12.7 | | | 125x100 |
| 100-250/110 • | 11 | 15 | | 24.3 | | | | | | 24.3 | 24.2 | 24.1 | 23.7 | 23.3 | 23.1 | 22.7 | 22.1 | 19.7 | 18.6 | 1L4 | | 125x100 |
| 100-250/150 • | 15 | 20 | | 2T8 | | | | | | 27.8 | 27.7 | 27.6 | 27.2 | 26.8 | 26.6 | 26.2 | 25.6 | 232 | 221 | 14.9 | | 125x100 |
| 100-315/150 • | 15 | 20 | | 29.9 | | | | | | | 29.7 | 29.5 | 29.1 | 28.8 | 28.6 | 28.1 | 27.5 | 25 | 24 | 16.8 | | 125x100 |
| 100-315/185 • | 18.5 | 25 | | 35 | | | | | | | 34.4 | 342 | 33.8 | 33.5 | 333 | 328 | 32.2 | 30 | 29 | 224 | | 125x100 |
| 100-315/220· | 22 | 30 | | 37 | | | | | | | 36.8 | 36.7 | 36.4 | 36.1 | 35.9 | 35.5 | 35.1 | 332 | 32.4 | 26.6 | | 125x100 |
| 100-315/300 • | 30 | 40 | | 42 | | | | | | | 4L8 | 41.7 | 4L4 | 4L1 | 40.9 | 40.5 | 40.1 | 382 | 37.4 | 3L6 | | 125x100 |
| 100-400/300 • | 30 | 40 | | 46.4 | | | | | | | | 46 | 46 | 46 | 46 | 45 | 44 | 42 | 40 | 29.6 | | 125x100 |
| 100-400/370 • | 37 | 50 | | 5L8 | | | | | | | | 513 | 5L2 | 5L1 | 51 | 50.5 | 49.5 | 475 | 46 | 37.3 | | 125x100 |
| 100-400/450 · | 45 | 60 | | 57.1 | | | | | | | | 56.7 | 56.4 | 56.1 | 56 | 56 | 55 | 53 | 52 | 45 | 321 | 125x100 |

## TECH NICAL DATA / *DATOS TiCNICOS*

**60 HZ n=1750 1/min**

| MODEL *MODELO* | Power *Potencia* | | US gpm | Q=DELIVERY/C>4a£M£ | | | | | | | | | | | | | | | | | DN |
|---|---|---|---|---|---|---|---|---|---|---|---|---|---|---|---|---|---|---|---|---|---|
| | | | | 0 | 132 | 154 | 176 | 220 | 264 | 396 | 441 | 485 | 617 | 661 | 881 | 1101 | 1322 | 1762 | 2203 | 2643 | |
| | | | l/min | 0 | 500 | 583 | 667 | 833 | 1000 | 1500 | 1667 | 1833 | 2333 | 2500 | 3333 | 4167 | 5000 | 6667 | 8333 | 10000 | |
| | kw | hp | m³/h | 0 | 30 | 35 | 40 | 50 | 60 | 90 | 100 | 110 | 140 | 150 | 200 | 250 | 300 | 400 | 500 | 600 | mm |
| 125*200/55 • | 5.5 | 7.5 | | 1L4 | 1L1 | 1L1 | 11 | 10.9 | 10.8 | 102 | 10 | 9.7 | 8.9 | 8.6 | 6.9 | | | | | | 150x125 |
| 125-200/75 • | 7.5 | 10 | | 14.1 | 13.9 | 13.8 | 13.8 | 13.7 | 13.6 | 13.1 | 12.9 | 12.7 | 11.9 | 11.6 | 9.6 | | | | | | 150x125 |
| 125-200/110 • | 11 | 15 | | 18.1 | 17.9 | 17.8 | 17.8 | 17.7 | 17.6 | 171 | 16.9 | 16.7 | 15.9 | 15.6 | 13.6 | 9.8 | | | | | 150x125 |
| 125-250/75 • | 75 | 10 | | 15.4 | | | | | 15.3 | 15 | 14.8 | 14.6 | 13.6 | 13.1 | | | | | | | 150x125 |
| 125-250/110 • | 11 | 15 | | 19.4 | | | | | 19.3 | 19.1 | 19 | 18.9 | 18.1 | 17.8 | 153 | 1L7 | | | | | 150x125 |
| 125-250/150 · | 15 | 20 | | 23.2 | | | | | 23.3 | 23.1 | 23 | 229 | 22 | 22 | 19.8 | 16.5 | 123 | | | | 150x125 |
| 125-250/185 • | 18.5 | 25 | | 25.6 | | | | | 25.5 | 255 | 25.4 | 253 | 24.9 | 24.7 | 23 | 203 | 16.5 | | | | 150x125 |
| 125-315/185 • | 18.5 | 25 | | 27.3 | | | | | | | 26.9 | 26.7 | 25.9 | 25.6 | ***233*** | 19.7 | 14.9 | | | | 150x125 |
| 125-315/220 • | 22 | 30 | | 30 | | | | | | | 29.7 | 29.6 | 28.9 | 28.6 | 26.5 | 23.2 | 18.4 | | | | 150x125 |
| 125-315/300 • | 30 | 40 | | 35.6 | | | | | | | 35.4 | 353 | 34.8 | 34.6 | 32.9 | 30.1 | 26.1 | | | | 150x125 |
| 125-315/370 • | 37 | 50 | | 38.2 | | | | | | | 38 | 37.9 | 37.4 | 37.2 | 35.7 | 33.1 | 29.4 | 17.8 | | | 150x125 |
| 125-400/220 • | 22 | 30 | | 33.4 | | | | | | ***323*** | 325 | 32.1 | 30.5 | 29.7 | 24.7 | 173 | | | | | 150x125 |
| 125-400/300 • | 30 | 40 | | 41 | | | | | | 41 | 40.5 | 403 | 39.2 | 38.6 | 34.4 | 27.5 | 183 | | | | 150x125 |
| 125-400/370 • | 37 | 50 | | 46.2 | | | | | | 46 | 45.7 | 45.5 | 44.6 | 44.2 | 40.7 | 34.8 | 26.5 | | | | 150x125 |
| 125-400/450 · | 45 | 60 | | 5L4 | | | | | | 51 | 50.9 | 503 | 50.1 | 49.8 | 47 | 422 | 343 | | | | 150x125 |
| 125-400/550 • | 55 | 75 | H(m) | 56.5 | | | | | | 563 | 56.3 | 562 | 55.9 | 55.7 | 533 | 50.3 | 44.7 | 26.7 | | | 150x125 |
| 150-200/110 · | 11 | 15 | | 14 | | | | | | | | 13.5 | 13.4 | ***13.3*** | 13.1 | 12.9 | 117 | 7.8 | | | 200x150 |
| 150-200/150 · | 15 | 20 | | 16.3 | | | | | | | | 15.5 | 153 | 15.2 | 14.8 | 14.3 | 13.5 | 1L1 | | | 200x150 |
| 150-200/185 • | 18.5 | 25 | | 183 | | | | | | | | 17.5 | 17.3 | 17.2 | 16.8 | 16.3 | 15.5 | 13.1 | 10 | | 200x150 |
| 150-250/150 · | 15 | 20 | | 17.5 | | | | | | | | | | 16.8 | 15.9 | 14.7 | 132 | 9.2 | | | 200x150 |
| 150-250/185 • | 18.5 | 25 | | 213 | | | | | | | | | | 20.8 | 20 | 18.9 | 17.5 | 13.8 | 8.7 | | 200x150 |
| 150-250/220 • | 22 | 30 | | 24 | | | | | | | | | | 23.6 | 23 | 22 | 203 | 17.1 | 12 | | 200x150 |
| 150-250/300 · | 30 | 40 | | 25.5 | | | | | | | | | | 25 | 24.5 | 23.5 | 22 | 18.8 | ***133*** | | 200x150 |
| 150-315/300 • | 30 | 40 | | 30.2 | | | | | | | | | | 29.7 | 29 | 27.9 | 26.4 | 223 | | | 200x150 |
| 150-315/370 · | 37 | 50 | | 33.6 | | | | | | | | | | 33.5 | 32.7 | 3L7 | 30.4 | 26.7 | 21.4 | | 200x150 |
| 150-315/450 · | 45 | 60 | | 37.7 | | | | | | | | | | 37.6 | 36.9 | 35.9 | 34.7 | 3L3 | 26.5 | | 200x150 |
| 150-315/550 • | 55 | 75 | | 40 | | | | | | | | | | 40 | 393 | 38.4 | 372 | 33.9 | 29.4 | | 200x150 |
| 150-315/750 • | 75 | 100 | | 45 | | | | | | | | | | 45 | 443 | 43.4 | 422 | 38.9 | 34.4 | 27 | 200x150 |
| 150400/550 · | 55 | 75 | | 48.2 | | | | | | | | | 47.7 | 48 | 46 | 45 | 42 | 36.8 | ***292*** | | 200x150 |
| 150-400/750 · | 75 | 100 | | 55.4 | | | | | | | | | 55 | 55 | 54 | 53 | 51 | 47 | 41 | ***322*** | 200x150 |
| 150400/900 • | 90 | 125 | | 59.5 | | | | | | | | | 59 | 59 | 58 | 57 | 56 | 52 | 46 | 37.7 | 200x150 |
| 150-400/1100 · | 110 | 150 | | 65.5 | | | | | | | | | 65 | 65 | 64 | 63 | 62 | 58 | 52 | 43.7 | 200x150 |

| MODEL *MODELO* | Power *Potencia* | | US gpm | Q=DELIVERY/C>4a£M£ | | | | | | | | | | | | | | | DN |
|---|---|---|---|---|---|---|---|---|---|---|---|---|---|---|---|---|---|---|---|
| | | | | 0 | 604 | 991 | 1374 | 1762 | 2145 | 2533 | 2916 | 3304 | 3687 | 4075 | 4564 | 5075 | 5586 | | |
| | | | l/min | 0 | 2283 | 3750 | 5200 | 6667 | 8117 | 9583 | 11033 | 12500 | 13950 | 15417 | 17267 | 19200 | 21133 | | |
| | kw | hp | m³/h | 0 | 137 | 225 | 312 | 400 | 487 | 575 | 662 | 750 | 837 | 925 | 1036 | 1152 | 1268 | | mm |
| 200-250/185 • | 18.5 | 25 | | 15.7 | 15.3 | 14.8 | 13.7 | 122 | 10.6 | 8.9 | 6.8 | | | | | | | | 250x200 |
| 200-250/220 • | 22 | 30 | | 18.5 | | 17.2 | 16.2 | 14.8 | 131 | 11.1 | 8.7 | | | | | | | | 250x200 |
| 200-250/300 • | 30 | 40 | | 231 | | 2L5 | 20.5 | 19.4 | 175 | 16 | 13.6 | 10.8 | | | | | | | 250x200 |
| 200-315/550 • | 55 | 75 | | 311 | | 30.2 | 29.8 | 29.1 | 273 | 253 | 23 | 19.2 | 143 | | | | | | 250x200 |
| 200-315/750 • | 75 | 100 | | 35.1 | | 34.3 | 34 | 33.3 | 32 | 29.9 | 27.1 | 23.4 | 19.1 | | | | | | 250x200 |
| 200-315/900 • | 90 | 125 | | 421 | | 413 | 41 | 403 | 39 | 36.9 | 34.1 | 30.4 | 26.1 | | | | | | 250x200 |
| 200-400/750 • | 75 | 100 | | 41 | | 40.6 | 40.3 | 39.4 | 37.7 | 35 | 3L3 | 26.5 | | | | | | | 250x200 |
| 200-400/900 • | 90 | 125 | H(m) | 46.5 | | 46 | 45.7 | 44.9 | 43.4 | 41.1 | 37.7 | ***33.3*** | ***279*** | | | | | | 250x200 |
| 200-400/1100 • | 110 | 150 | | 524 | | 522 | 5L9 | 5L2 | 50 | 48 | 45.1 | 4L2 | ***362*** | | | | | | 250x200 |
| 200-400/1320 • | 132 | 180 | | 60.1 | | 59.8 | 59.6 | 59 | 57.9 | 56.1 | 53.5 | 50 | 45.4 | 39.6 | | | | | 250x200 |
| 250-315/550 • | 55 | 75 | | 261 | | | 24.9 | 24.5 | 24.1 | 23.6 | 228 | 2L6 | 19.9 | 18 | 14.5 | | | | 300x250 |
| 250-315/750 • | 75 | 100 | | 35.4 | | | 35.2 | 34.7 | 333 | 325 | 30.4 | 28 | 25 | 213 | 16.4 | | | | 300x250 |
| 250-315/900 • | 90 | 125 | | 393 | | | 39.8 | 39.5 | 383 | 373 | 36 | 33.9 | 31 | 273 | 225 | | | | 300x250 |
| 250-400/1100 • | 110 | 150 | | 45.1 | | | 45 | 44.9 | 44.5 | 43.8 | 423 | 40.5 | 37.9 | 35.1 | 30 | 23.9 | | | 300x250 |
| 250-400/1320 • | 132 | 180 | | 503 | | | 50.6 | 50.5 | 502 | 49.7 | 48.4 | 46.8 | 44.5 | 42 | 37.3 | 3L5 | | | 300x250 |
| 250-400/1600 • | 160 | 220 | | 56.9 | | | 56.4 | 563 | 56 | 55.6 | 54.5 | 53.1 | 5 LI | 48.9 | 44.7 | 39.4 | 33 | | 300x250 |

**•=PS4** ***avai\ab\e/disponible***

## MATERIAL *DESCm^IOH I DESCRIPCIdN DE MATERIAL*

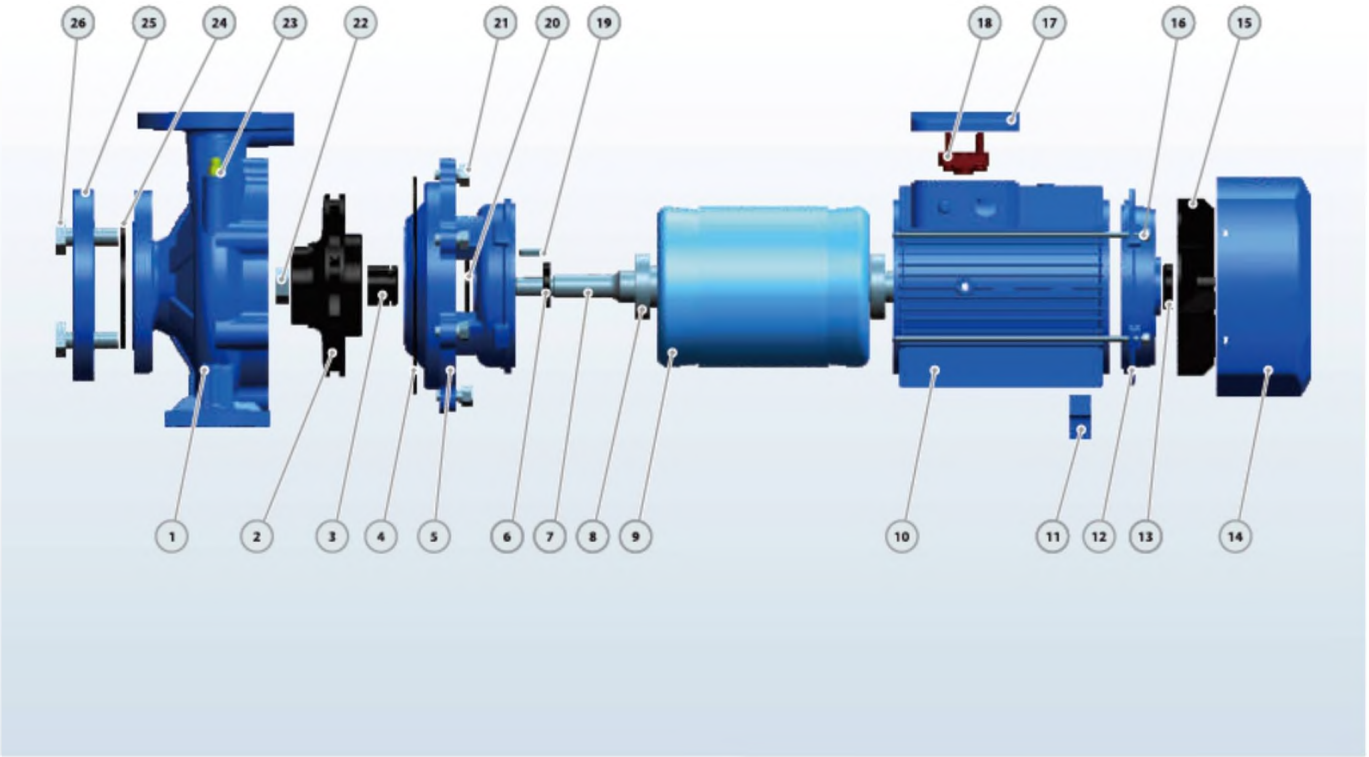


| No. | Description<br>*Descripción* | Material<br>*Material* | No. | Description<br>*Descripción* | Material<br>*Material* | No. | Description<br>*Descripción* | Material<br>*Material* |
|---|---|---|---|---|---|---|---|---|
| 1 | Pump Case<br>*Cuerpo de Bomba* | Cast iron<br>*Fundición* | 10 | Motor Case<br>*Cuerpo de Motor* | Aluminum<br>*Aluminio* | 19 | Impeller Key<br>*Chaveta Impulsor* | Iron<br>*Hierro* |
| 2 | Impeller<br>*Impulsor* | SS304/Cast iron<br>*Inox 304/Fundición* | 11 | Support Foot<br>*Soporte Pie* | Plastic<br>*Plástico* | 20 | Water Deflector<br>*Deflector* | Rubber<br>*Caucho* |
| 3 | Mechanical Seal<br>*Cierre Mecánico* | SiC/Carbon/SS304<br>*SiC-Grafito-Inox304* | 12 | Back Cover<br>*Tapa Trasera* | Cast iron<br>*Fundición* | 21 | Connection Bolt<br>*Perno* | Steel<br>*Acero* |
| 4 | O-ring<br>*Junta Tórica* | *Rubber*<br>*Caucho* | 13 | Reinforced Seal<br>*Sello Reforzado* | Rubber<br>*Caucho* | 22 | Impeller Nut<br>*Tuerca de Impulsor* | Galvanizated Steel<br>*Acero Galvanizado* |
| 5 | Connection<br>*Conexión* | Cast iron<br>*Fundición* | 14 | Fan Cover<br>*Tapa Ventilador* | Aluminum<br>*Aluminio* | 23 | Release Valve<br>*Tapón Cebado* | Brass<br>*Bronce* |
| 6 | Reinforced Seal<br>*Sello Reforzado* | Rubber<br>*Caucho* | 15 | Fan<br>*Ventilador* | Plastic<br>*Plástico* | 24 | Gasket<br>*Empague* | Rubber<br>*Caucho* |
| 7 | Shaft<br>*Eje* | SS304/45# Steel<br>*Inox 304/45# Hierro* | 16 | Through Bolt<br>*Perno* | Steel<br>*Acero* | 25 | Counter Flange<br>*Contra Brida* | Galvanizated Cast iron<br>*Fundición Galvanizado* |
| 8 | Bearing<br>*Rodamiento* | Ball Bearing<br>*Bola Rodamiento* | 17 | Terminal Box<br>*Caja de Bornas* | Aluminum<br>*Aluminio* | 26 | Flange Bolt<br>*Perno de Brida* | Steel<br>*Acero* |
| 9 | Wound Stator/Rotor<br>*Estator / Rotor* | Silicon Steel/Copper<br>*Acero al Silicio/Cobre* | 18 | *Terminal Board*<br>*Tablero de Bornas* | Plastic<br>*Plástico* | | | |

## MMERIAL DESCRIPTION / *DESCRIPCI6N DE MATERIAL*

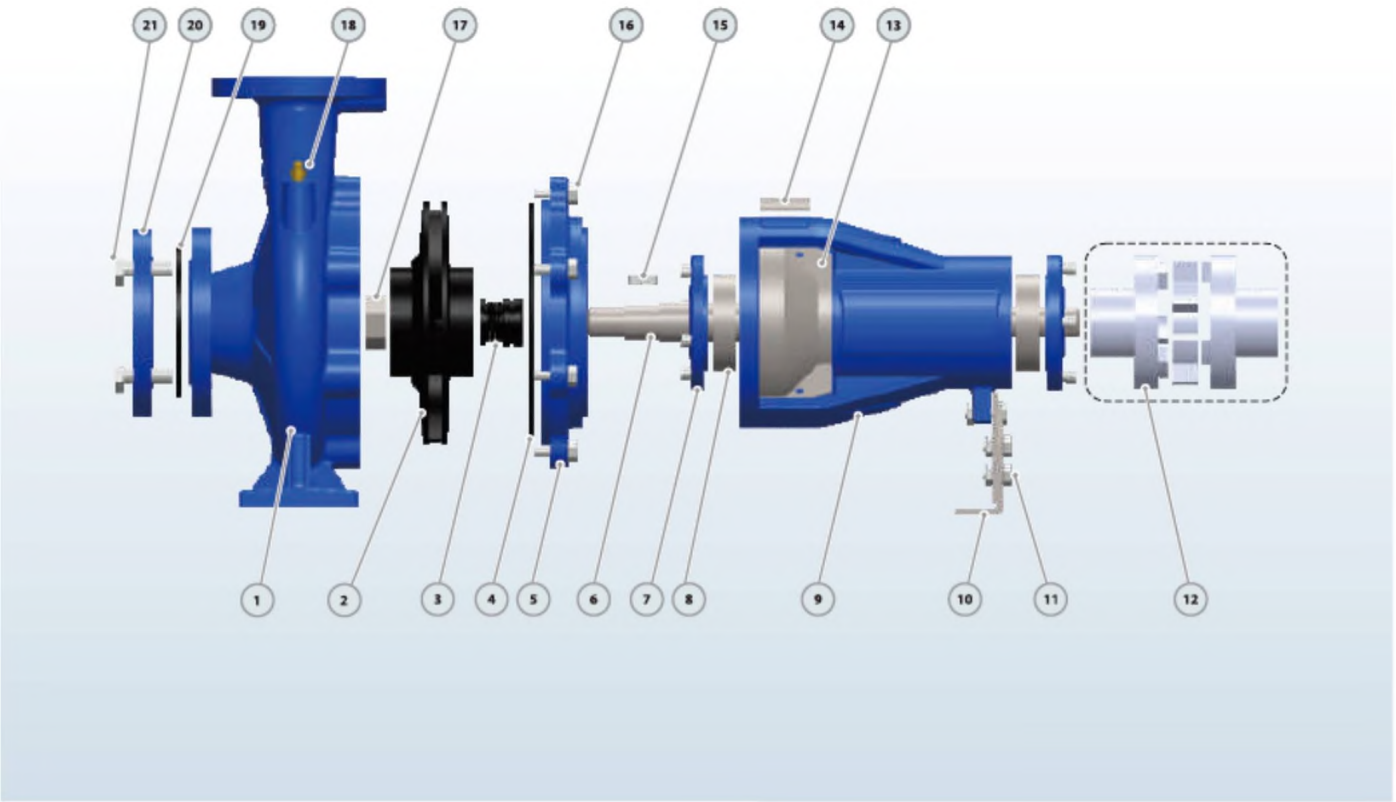


| No. | Description<br>Descripción | Material<br>Mararial | No. | Description<br>nAArripciAri | Material<br>*Material* | No. | Description<br>flAAcrip ín | Material<br>M *mrial* |
|---|---|---|---|---|---|---|---|---|
| 1 | Pump Case<br>Cufiwu de Bomba | Cast iron<br>Fundición | 8 | Bearing<br>*Rodomisnisi* | Ball Bearing<br>*Bola RodAiojejdQ* | 15 | Impeller Key<br>Chaveta Impulsor | Iron<br>她卯 |
| 2 | Impeller<br>Impulsor | SS304/Cast iron<br>*tDQX,304/tjuuliuiui* | 9 | Support Case<br>GVP則 Soporte | Cast iron<br>Fundición | 16 | Connection Bolt<br>Perno | Steel<br>Acero |
| 3 | Mechanical Seal<br>Cierre Mecánico | SiG/Carbon/SS3IM<br>*SiC-Grafito-Inox304* | 10 | Support Foot<br>*^WQll&Pie* | Iron<br>*Ujejm* | 17 | Impeller Nut<br>*JuAiCAde* Impulsor | Galvanizated Steel<br>*AzetQ G^Ji/Anii&dQ.* |
| 4 | O-ring<br>*Junta* Tórica | *Rubber*<br>*Qauclm* | 11 | Foot Bolt<br>Egam | Steel<br>*Acejn* | 18 | Release Valve<br>Tapón Cebado | Brass<br>fiXQOCft |
| 5 | Connection<br>*QQ/^X'Q* | Cast iron<br>Fundicinn | 12 | Couping(Optional)<br>*Uni6n(Q^£xu^D* | Steel<br>4cerp | 19 | Gasket<br>*EmpAUUJ^* | Rubber<br>Caucho |
| 6 | Shaft<br>to | SS304/45# Steel<br>*IfU^304/45ft tiiSJUQ* | 13 | Case Cover<br>*Taps* Cufiw | SS304<br>*Inox304* | 20 | Counter Flange<br>*Contra RxidA.* | GalUADizated Cast iron<br>undición Galvaniz |
| 7 | Bearing Cover<br>Taps Rodamiento | Cast iron<br>Fundición | 14 | Nameplate<br>tftizpnj | Aluminum<br>*Akimmio.* | 21 | Flange Bolt<br>Pezno. *de Brida.* | Steel<br>*Anero.* |

## DIMENSIONS AND WEIGHT / *DIMENSIONES YPESOS*

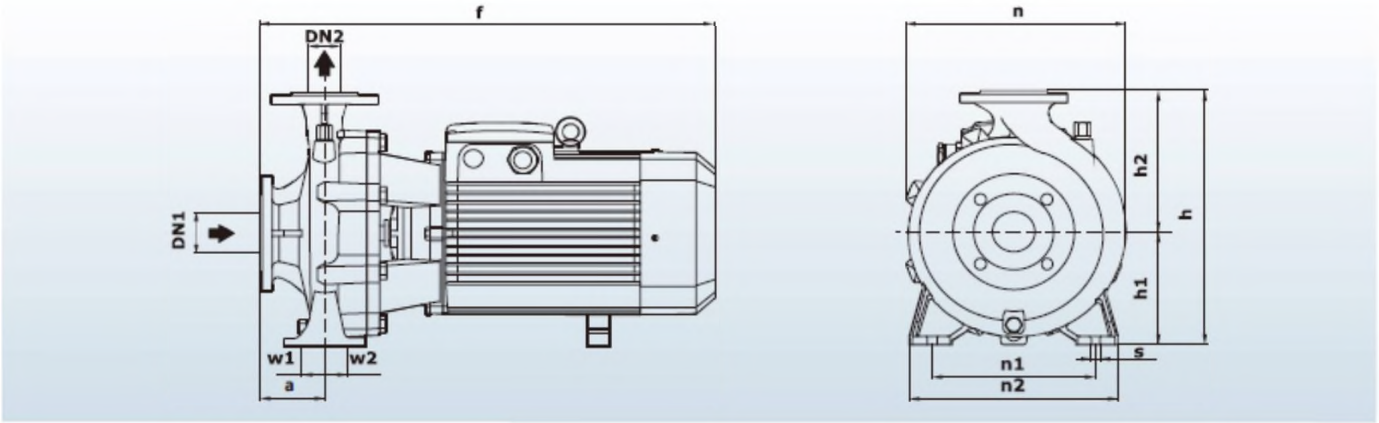


| MODEL/ ***MODELO*** | | DIMENSIONS / ***DIMENSIONES*** mm | | | | | | | | | | | | | kg | |
|---|---|---|---|---|---|---|---|---|---|---|---|---|---|---|---|---|
| Single-phase ***Manof^sico*** | Three-phase ***Trif^sico*** | DN1 | DN2 | a | f | h | hi | h2 | n | n1 | n2 | w1 | w2 | s | 1- | 3- |
| 32 125/7 | 32-125/7 | | | 80 | | 255 | 114 | 141 | 202 | 140 | 190 | | | | 27 | 24 |
| 32-125/11 | 32-125/11 | | | | 435 | | | | | | | | | | 28 | 25 |
| 32-160/15 | 32-160/15 | | | | | | | | | | | | | | 38 | 34 |
| 32-160/22 | 32-160/22 | | | 83 | | 295 | 133 | 162 | 245 | | 245 | 35 | 35 | 15 | 43 | 39 |
| 32-160/30 | 32-160/30 | | | | 470 | | | | | 190 | | | | | 54 | 50 |
| 32-200/30 | 32-200/30 | cn | 32 | 82 | 490 | 342 | 161 | 181 | 265 | | 240 | | | | 56 | 52 |
| - | 32-200/40 | | | | | | | | | | | | | | - | 53 |
| - | 32-250/55 | | | | | | | | | | | | | | - | 66 |
| - | 32-250/75 | | | 88 | 590 | 405 | 186 | 219 | 333 | 250 | ***328*** | 49 | 49 | 16 | - | 73 |
| - | 32-250/110 | | | | | | | | | | | | | | - | 95 |
| - | 32-250/55D | | | 160 | 610 | 362 | 162 | 200 | 330 | 216 | 280 | | | 14 | - | 73 |
| - | 32-250/75D | | | | | | | | | | | | | | - | 80 |
| 40-125/11 | 40-125/11 | | | 82 | 440 | 260 | 116 | 144 | 220 | 160 | 212 | | | | 30 | 27 |
| 40-125/15 | 40-125/15 | | | | | | | | | | | | | | 33 | 29 |
| 40-125/22 | 40-125/22 | | | | | | | | | | | 37 | 37 | | 38 | 34 |
| 40-160/30 | 40-160/30 | | | 80 | 490 | 305 | 135 | 170 | 250 | 190 | 241 | | | | 52 | 48 |
| - | 40-160/40 | | 40 | | | | | | | | | | | | - | 50 |
| - | 40-200/55 | | | 102 | 560 | 345 | 162 | 193 | 282 | 214 | 267 | | | | - | 66 |
| - | 40-200/75 | | | | | | | | | | | | | | - | 73 |
| - | 40-250/92 | | | | | | | | | | | | | | - | 100 |
| - | 40-250/110 | | | 94 | 712 | 415 | 186 | 229 | 327 | 250 | ***327*** | 49 | 49 | | - | 116 |
| - | 40-250/150 | 65 | | | | | | | | | | | | | - | 146 |
| 50-125/22 | 50-125/22 | | | | | | | | | | | | | | 45 | 41 |
| 50-125/30 | 50-125/30 | | | 102 | 525 | 305 | 135 | 170 | 263 | 190 | ***245*** | | | | 54 | 50 |
| - | 50-125/40 | | | | | | | | | | | | | | - | 52 |
| - | 50-160/55 | | | | | | | | | | | | | | - | 64 |
| - | 50-160/75 | | | 110 | 560 | 348 | 164 | 193 | 270 | 212 | ***262*** | 37 | 37 | | - | 71 |
| - | 50-200/92 | | 50 | | | | | | | | | | | 15 | - | 90 |
| - | 50-200/110 | | | 104 | 722 | 392 | 186 | 206 | 307 | 232 | 310 | | | | - | 106 |
| - | 50-250/150 | | | | | | | | | | | | | | - | 145 |
| - | 50-250/185 | | | 102 | 720 | 416 | 186 | 230 | 330 | 250 | 327 | | | | - | 153 |
| - | 50-250/220 | | | | | | | | | | | | | | - | 183 |
| - | 65-125/40 | | | | | | | | | | | | | | - | 56 |
| - | 65-125/55 | | | 104 | 580 | 345 | 162 | 193 | 275 | 212 | 280 | | | | - | 68 |
| - | 65-125/75 | | | | | | | | | | | | | | - | 74 |
| - | 65-160/92 | | | | | | | | | | | | | | - | 90 |
| - | 65-160/110 | 80 | 65 | 110 | 730 | | | 239 | | | | | | | - | 106 |
| - | 65-160/150 | | | | | 425 | 186 | | | 232 | 309 | 49 | 49 | | - | 134 |
| - | 65-200/150 | | | | | | | | | | | | | | - | 140 |
| - | 65-200/185 | | | 111 | 740 | | | 240 | | | | | | | - | 145 |
| - | 65-200/220 | | | | | | | | 330 | | | | | | - | 185 |
| - | 80-125/40 | | | | | | | | | | | | | | - | 56 |
| - | 80-125/55 | | | 117 | | 357 | 163 | 194 | | 212 | 280 | | | | - | 68 |
| - | 80-125/75 | 100 | 80 | | 750 | | | | | | | | | | - | 74 |
| - | 80-160/110 | | | | | | | | | | | | | | - | 113 |
| - | 80-160/150 | | | 88 | | | | | | 255 | 332 | | | | - | 143 |
| - | 80-160/185-220 | | | | | 435 | 186 | 250 | | | | | | | - | 150 |
| - | 100-160/150 | | | | | | | | | | | | | | - | 143 |
| - | **100-160/185** | 125 | 100 | 130 | 765 | | | | 345 | 262 | 340 | 55 | 55 | 16 | - | 150 |
| - | 100-160/220 | | | | | | | | | | | | | | - | 183 |

## DIMENSIONS AND WEIGHT/ *DIMENSIONES YPESOS*

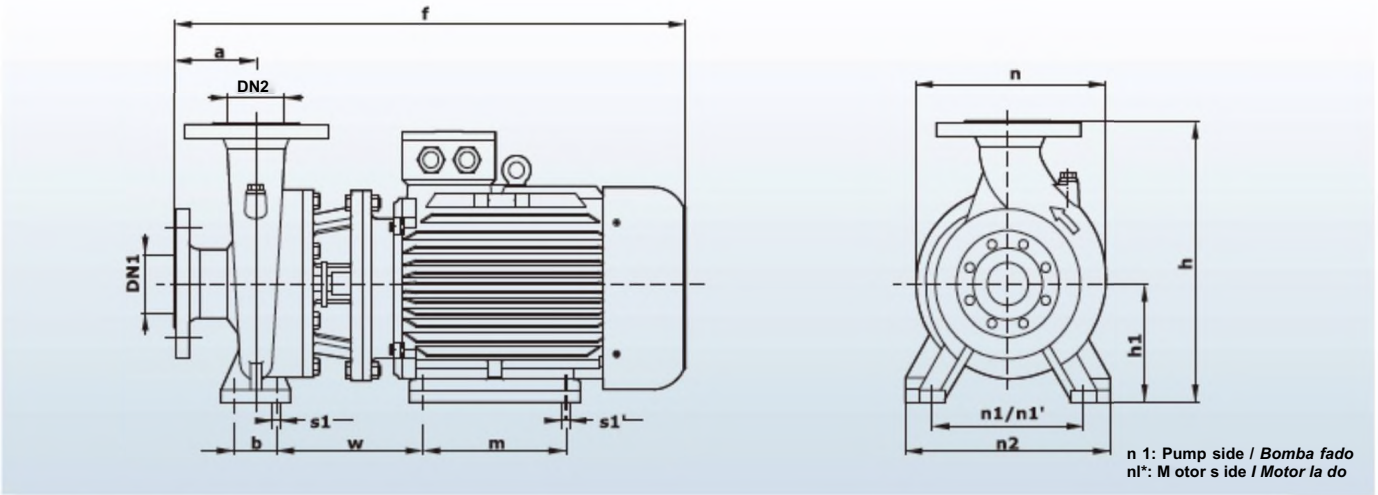


| MODEL/MODELO Three-phas ❷ *Trif^sico* | DIMENSIONS *1 DIMENSIONES* mm | | | | | | | | | | | | | | | kg |
|---|---|---|---|---|---|---|---|---|---|---|---|---|---|---|---|---|
| | DN1 | DN2 | a | f | h | hi | n | n1 | nV | n2 | b | w | m | s1 | s1_ | 3~ |
| 65-250/220 | 80 | 65 | 116 | 870 | 420 | 180 | 369 | 260 | 279 | 320 | 70 | 246 | 241 | 18 | 15 | 210 |
| 65-25Q/300 | | | | 990 | 456 | 195 | | 250 | 318 | 327 | | 293 | 305 | | 19 | 230 |
| 65-25Q/370 | | | | | | | | | | | | | | | | 240 |
| 80-200/220 | 100 | 80 | 118 | 880 | 460 | 250 | 360 | 310 | 279 | 260 | 95 | 258 | 305 | 20 | | 212 |
| 80-200/300 | | | | 950 | | | | | 318 | | | 246 | 241 | | 15 | 222 |
| **80-250/370** | | | 130 | | 537 | | 490 | | | 310 | | 228 | | | 19 | 245 |
| 80-250/450 | | | | 980 | | | | | 356 | | | 229 | 311 | | | 385 |
| 80-25(V550 | | | | 1160 | | | | | 406 | | | 363 | 349 | | 24 | 497 |
| 100-200/220 | 125 | 100 | 140 | 910 | 530 | 225 | 422 | 324 | 279 | 402 | 115 | 256 | 305 | 18 | 15 | 217 |
| 100-200/300 | | | | 1025 | | | | | 318 | | | 248 | 241 | | | 227 |
| 100-200/370 | | | | | | | | | | | | | | | | 250 |
| 100<250/450 | | | | 1000 | 580 | 250 | 418 | 310 | 356 | 402 | 95 | 224 | 311 | 20 | 19 | 390 |
| 100-250/550 | | | | 1180 | | | | | 406 | | | 325 | 349 | | 20 | 503 |
| 100-250/750 | | | | 1250 | | 280 | | | 436 | | | | | | | 535 |

## COUNTER FLANGE / *CONTRABRIDA*

| DN | D mm | K mm | HOLES *ORIHOOS* N | 0mm |
|---|---|---|---|---|
| 32 | 140 | 100 | 4 | 18 |
| 40 | 150 | 110 | | |
| 50 | 165 | 125 | | |
| 65 | 185 | 145 | | |
| 80 | 200 | 160 | 8 | |
| 100 | 220 | 180 | | |
| 125 | 250 | 210 | | |
| 150 | 285 | 240 | | 22 |
| 200 | 340 | 295 | | |
| 250 | 405 | 355 | 12 | 26 |


## PIPE RECOMMEND *ITUBERIA RECOMENDADA*

| SERIES *SERIE* | SUCTION *ASPIRAadN* | DISCHARGE *IMPULSION* | PIPE RECOMMEND *TUBERIA RECOMENDADA* SUCTION *ASPRAODN* | DISCHARGE *IMPULSION* |
|---|---|---|---|---|
| 32 | 50mm | 32mm | 2%'-3- | 2--2¹// |
| 40 | 65mm | 40mm | 3'-4- | 2W |
| 50 | 65mm | 50mm | 4" | r |
| 65 | 80 mm | 65mm | 5B | 4- |
| 80 | 100 mm | 80mm | 6' | 5B |
| 100 | 125 mm | 100 mm | 8B | 6- |
| 125 | 150 mm | 125mm | 10. | 8" |
| 150 | 200mm | 150mm | 12- | 10- |
| 200 | 250mm | 200mm | 14" | 12. |
| 250 | 300mm | 250mm | 16- | 14- |

## DIMENSIONS AND WEIGHT / *DIMENSIONES YPESOS*

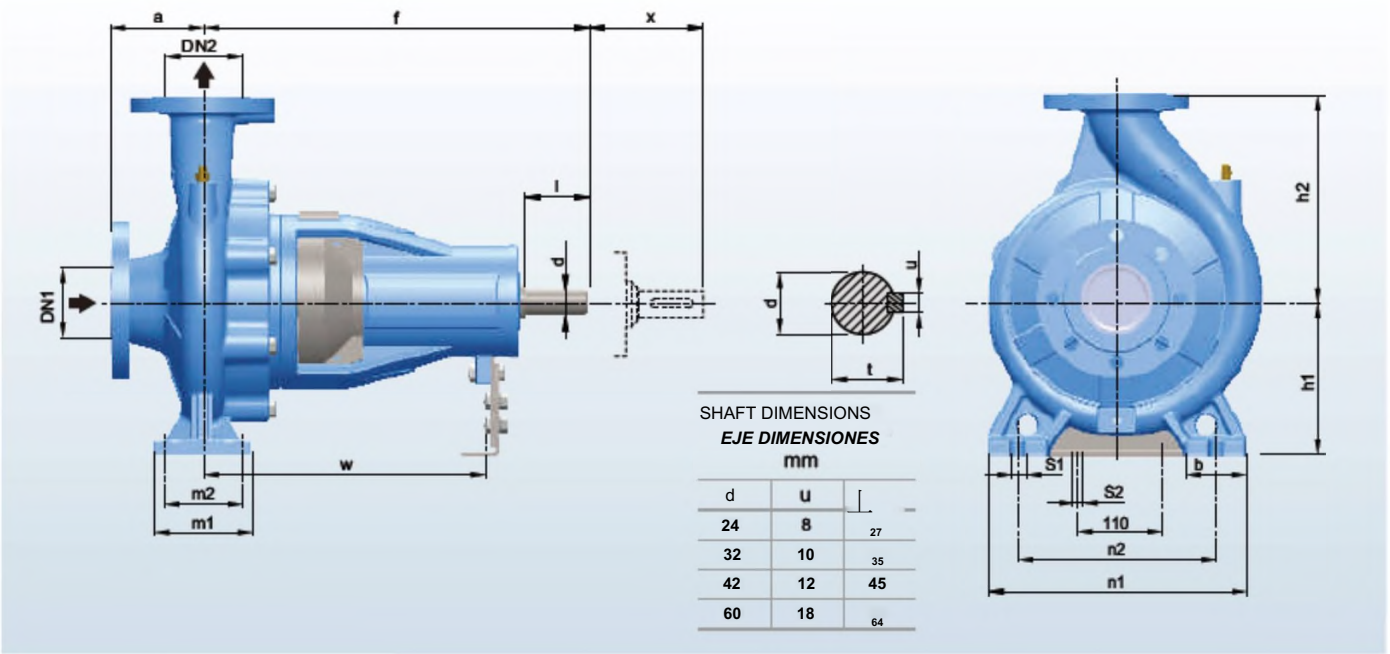

SHAFT DIMENSIONS
***EJE DIMENSIONES***
**mm**

| d | u | ⊥ |
|---|---|---|
| **24** | **8** | 27 |
| **32** | **10** | 35 |
| **42** | **12** | **45** |
| **60** | **18** | 64 |

| MODEL ***MODELO*** | DIMENSIONS ***I DIMENSIONES*** mm | | | | | | | | | | | | | | | | | kg |
|---|---|---|---|---|---|---|---|---|---|---|---|---|---|---|---|---|---|---|
| | DN1 DN2 a | | | f | hi h2 b ml m2 rd n2 $1 s2 w | | | | | | | | | | x | d | l | |
| 32-160 | 50 | 32 | 80 D | 360 | 132 | ∽ | 55 | 9 | 70 | 240 | 190 | 14 | 14 | ^ | 100 | 24 | 50 | 芸 |
| 32-200 | 50 | 32 | 80 3 | 360 | 160 | ∽ | 5 | 5 | 70 | 240 | 190 | 14 | 14 | 260 | 100 | 24 | 50 | |
| 32-250 | 50 | 32 | 80 D | 360 | 160 | ∽ | 55 | 95 | 70 | 240 | 190 | 14 | 14 | 260 | 100 | 24 | 50 | 芸 |
| 40-160 | 65 | 4q | 80 D | 360 | 132 | [illegible] | 0 | 9 5 | 70 | 240 | 190 | 14 | 14 | 260 | 100 | 24 | 50 | |
| 40-200 | 65 | 4> | 100 | 360 | 160 | ∽ | 55 | 100 | 70 | 265 | 212 | 14 | 14 | 260 | 100 | 24 | 50 | |
| **40-250** | 65 | 4Q | 100 | 360 | 180 | | 5 | 1 畳 | 95 | 320 | 250 | 14 | 14 | 260 | 100 | 24 | 50 | 58 |
| 50-125 | 65 | 夕 | 100 | 360 | 132 | 畳 | 5 50 | .00 | 70 | 240 | 190 | 14 | 14 | 260 | 100 | 24 | 50 | 30 |
| **50-160** | 65 | Q | 100 | 360 | 160 | | 95 | .00 | 70 | 265 | 212 | 14 | 14 | 260 | 100 | 24 | 50 | 35 |
| 50-200 | 65 | Q | 100 | 360 | 160 | | 50 | 100 | 70 | 265 | 212 | 14 | 14 | 260 | 100 | 24 | 50 | 45 |
| **50-250** | 65 | Q | 100 | 360 | 180 | § | 65 | 125 | 95 | 320 | 250 | 14 | 14 | 260 | 100 | 24 | 50 | 50 |
| 65-125 | 80 | Q 6 | 100 | 360 | 160 | 180 | 65 | 125 | 95 | 280 | 212 | 14 | 14 | 260 | 100 | 24 | 50 | 42 |
| 65-160 | 80 | § 5 | 100 | | 160 | 200 | 65 | 125 | 95 | 280 | 212 | 14 | 14 | 260 | 100 | 24 | 50 | S |
| 65-200 | 80 | 5 6 | 100 | 5 | 180 | 225 | 65 | 12 | 95 | 320 | 250 | 14 | 14 | | 140 | 24 | 58 | § |
| 65-250 | S | 6 5 | 100 | | § | 250 | 80 | 160 | 1 | 360 | 280 | 18 | 14 | 260 | 140 | 32 | | 3 |
| 65-315 | S | 善 | 125 | 靈 | 225 | 280 | 80 | 160 | 1 | 360 | 280 | 18 | 14 | 260 | 140 | 32 | 80 | 113 |
| 80-125 | 100 | 80 | 100 | | 180 | 22 5 | 65 6 5 | 125 | | 320 | 250 | 14 | 14 | | 140 | 24 | 50 | 150 |
| 80-160 | 100 | 80 | 100 | 慕 | 180 | 22 2 O | 6 5 | 125 | | 345 | 250 | 14 | 14 | 340 | 140 | 24 | 58 | |
| 80-200 | 100 | 80 工 | 100 | 470 | 200 | 2 5 Q | 8 0 | 125 168 | | 345 | 280 | 14 | 14 | 340 | 140 | 32 | | 8 |
| 80-250 | 100 | 80 工 | 100 | 470 | 200 | 31 8 I | 8 0 | 1 | 1 | 400 | 315 | 18 | 14 | 260 | 140 | 32 | 80 | |
| 80-315 | 100 | 80 工 | 125 | 蓋 | 250 | 35 2 5 | 8 0 | 160 | 1 20 | 400 | 315 | 18 | 14 | 340 | 140 | 24 | 50 | 116 |
| 80-400 | 100 | 100 工 | 125 | | 280 | 2 5 | 8 0 | 60 168 | 1 20 | 400 | 315 | 18 | 14 | 340 | 140 | 32 | 88 | 178 |
| 100-160 | 125 | 100 工 | 125 | | 200 | 2 O | | 1 | 1 95 | 360 | 280 | 18 | 14 | 340 | 140 | 32 | | 112 |
| 100-200 | 125 | 100 工 | 125 | ∽ | 200 | 8 P | 80 | 1 | 95 | 360 | 280 | 18 | 14 | 370 | 140 | 32 | 80 | 112 |
| 100-250 | 125 | 100 工 | 125 | 4- 70 | 225 | 8 Q 315 | 80 | 1 | 1 95 | 400 | 315 | 18 | 14 | | 140 | 32 | 80 | 152 |
| 100-315 | 125 | 100 工 | 140 | 470 | 250 | | 80 | 1 60 | 1 20 | 400 | 315 | 19 | 14 | 370 | 140 | 32 | 80 | 200 |
| 100-400 | 125 | | 140 | 530 | 280 | 355 | 100 | 200 1 60 | 1 20 | 50 | 400 | 13 | 14 | 370 | 140 | 2 | 110 | 166 |
| 125-200 | 150 | 125 | 140 | 470 | 250 | 315 | 80 | 60 28 | 1 20 | 40 o | 31 5 | 19 1 9 | 14 | 370 | 140 | 42 | 88 | 180 |
| **125~250** | 150 | 125 | 140 | 470 | 250 | 355 | 80 | 2 | 1 20 | | | 23 | 14 | 370 | 14 | 2 | | 186 |
| **12M1S** | 150 | 125 | 140 | 530 | 280 | 355 | 100 | 00 28 | 1 50 | | | 23 | 14 | 370 | 140 | 32 | 110 | 228 |
| 125-400 | 150 | 125 | 140 | 530 | 315 | 400 | 100 | 2 | 1 20 | Qo | 31 5 | 23 | 14 | 370 | 140 | 2 4 | 110 | 230 |
| 150-200 | 200 | 150 | 160 | 470 | 280 | 400 | 100 | 00 28 | 1 20 | 4^ Qo | ^ 0 | 23 | 14 | 370 | 140 | 32 | 80 | 234 |
| **iaMs** ❶ | 200 | 150 | 160 | 530 | 280 | 400 | 100 | 08 | 50 1 50 | 工 5< Qo | 44 ^ 0 | 23 | 14 | 370 | 140 | 2 4 | 110 | 363 |
| **15M15** | 200 | 150 | 160 | 530 | 280 | 400 | 100 | 00 | 1 50 | 工 5< 5 5 o | 4< 45 0 | 23 | 14 | | 140 | 42 4 | 110 | 316 |
| **15^400** | 200 | 150 | 160 | 530 | 315 | 450 | 100 | 21 | 1 50 | 工 5 5 o | 45 0 | 23 | 14 | | 140 | 2 4 | 110 | 400 |
| 200-250 | 250 | 200 | 180 | 530 | 355 | 475 | | 21 | 1 50 | zj 5 5 o | 45 0 | 23 | 14 | | 200 | 42 | 110 | |
| 200-315 | 250 | 200 | 180 | 530 | 355 | 450 | | 21 | 2 50 | 工 5 5 o | 45 0 | 28 | 14 | | 200 | 2 6 | 110 | |
| 200^400 | 250 | 200 | 180 | 770~~ | 400 | 500 | 10 | 300 | 50 5 2() | 工 7 1 o | 45 0 0 0 | 28 | 14 | 525 | 250 | 30 4 | 140 | |
| 250-315 | 300 | 250 | 250 | 530 | 400 | 500 | 10 | 300 | 5() | 工 7 1 o | 6( 0 0 | 28 | 14 | 525 52 | 250 | 2 | 110 | |
| 250-400 | 300 | 250 | 250 | 770 | 400 | 560 | 10 | 300 | 5 2() | -T 7 1 oI | 6< 0 0 6( | | 14 | 5 | 250 | 40 6 | 140 | |

# Horizontal Water Pumps PW

## PW

### TECHNICAL DESCRIPTION

- New design centrifugal pump
- Original design by PURITY (patented)
- Both square motor & round motor available

-YE3 high efficient motor, with protection IP55 class F

-Pump case with anti-corrosive coating

- Impeller in stainless steel AISI 304 or cast iron
- Shaft in stainless steel AISI 304 or galvanized iron
- Galvanized counter flange with bolts, nuts and gaskets
- Quality NSK bearing, wear resistance mechanical seal

# Product Specification (50HZ)

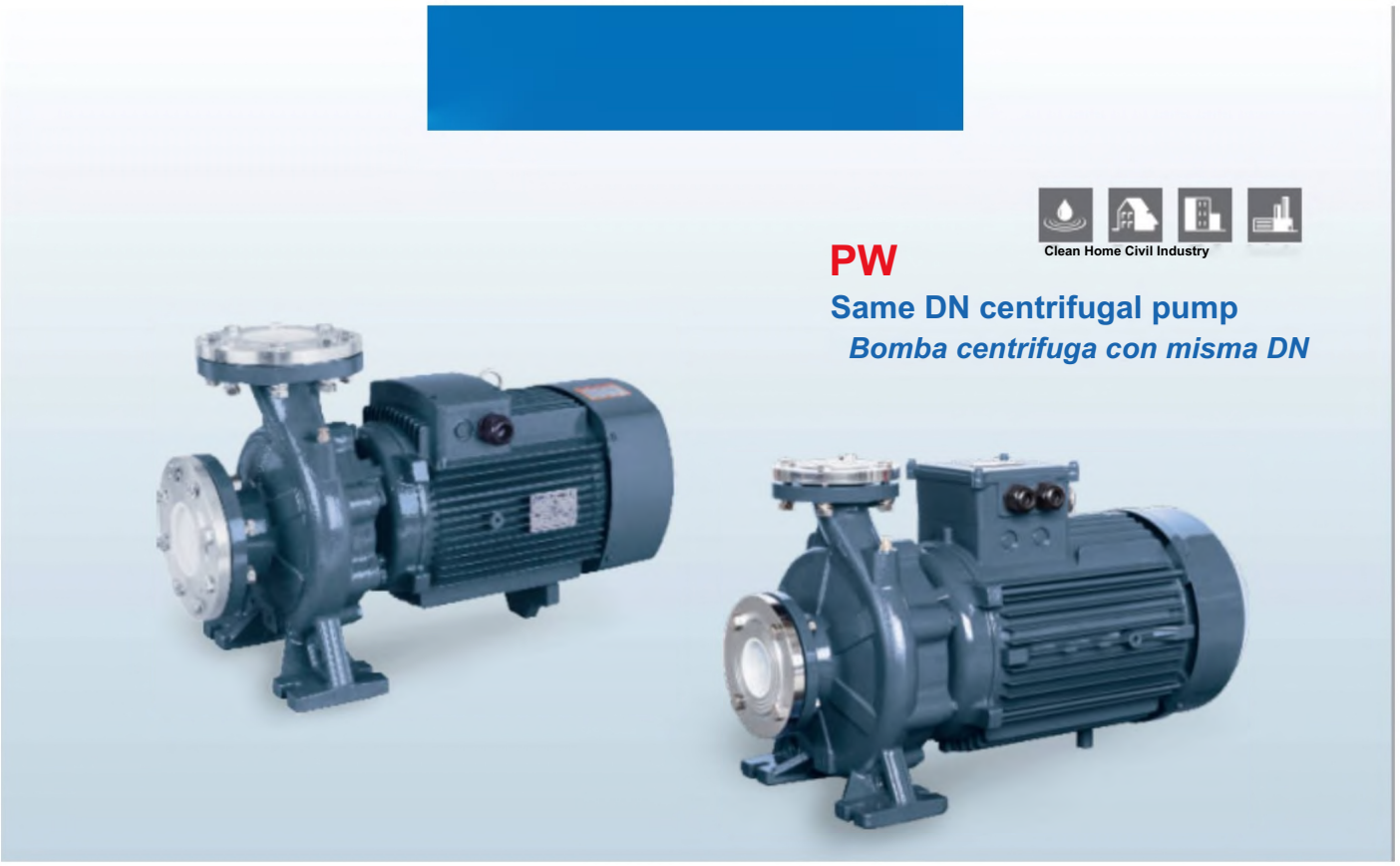


**NEW/NUEVO**

## TECHNICAL DESCRIPTION

-New design centrifugal pump
• Original design by PURITY (patented)
■ Both square motor & round motor available
-YE3 high efficient motor, with protection IP55 class F
-Pump case with anti-corrosive coating
■Impeller in stainless steel AISI 304 or cast iron
■ Shaft in stainless steel AISI 304 or galvanized iron
■ Galvanized counter flange with bolts, nuts and gaskets
• Quality NSK bearing, wear resistance mechanical seal

## APPLICATIONS

■ Suitable for use with clean water and liquids that are not chemically aggressive towards the materials from which the pump is made. The centrifugal pumps are recommended for use in water supply, cleaning sets, pressure boosting, firefighting sets, irrigation, industrial applications, water circulation in climatisation sets, agricultural.

## USING LIMITS

■ Liquid temperature between -10°C and +120°C
■ Ambient temperature up to +50°C
■ Max. working pressure 16 bar
■ Continuous service S1

## PATENTS

-Registered model PW
-Registered Patent Design no 201530478502.0

## TECHNICAL DATA / *DATOS TECNICOS*

**50 Hz n=2900 1/min**

| MODEL *MODELO* | Power *Potencia* | | l/min | Q=DELIVERY / *CAUDAL* | | | | | | | | | | | | | | | | | DN |
|---|---|---|---|---|---|---|---|---|---|---|---|---|---|---|---|---|---|---|---|---|---|
| | | | | 0 | 100 | 150 | 250 | 300 | 400 | 450 | 600 | 700 | 800 | 900 | 1200 | 1400 | 1500 | 1800 | 2000 | 2300 | |
| | kw | hp | m³/h | 0 | 6 | 9 | 15 | 18 | 24 | 27 | 36 | 42 | 48 | 54 | 72 | 84 | 90 | 108 | 120 | 138 | mm |
| 80-125/22 | 22 | 3 | | 17 | - | - | - | - | - | - | 15.4 | 14 | 12.8 | 11.5 | 6.5 | | | | | | 80x80 |
| 80-125/30 | 3 | 4 | | 20 | - | - | - | - | - | - | 18.8 | 18 | 17 | 15.6 | 11 | | | | | | 80x80 |
| 80-125/40 | 4 | 5.5 | | 24 | - | - | - | - | - | - | 23.1 | 23 | 21.5 | 20.3 | 15.8 | 11.8 | | | | | 80x80 |
| 80-160/55 | 5.5 | 7.5 | | 32 | - | - | - | - | - | - | 30.6 | 30 | 28 | 26.6 | 20.5 | 14.8 | | | | | 80x80 |
| 80-160/75 | 7.5 | 10 | | 40 | - | - | - | - | - | - | 38 | 37 | 36 | 34.4 | 29 | 24 | 21 | | | | 80x80 |
| 80-200/92 | 9.2 | 12.5 | | 50.5 | - | - | - | - | - | - | 46.8 | 45 | 43 | 40.9 | 32.5 | 25.7 | | | | | 80x80 |
| 80-200/110 | 11 | 15 | | 57.5 | - | - | - | - | - | - | 53.5 | 52 | 50 | 47.5 | 40 | 33 | 29 | | | | 80x80 |
| 80-250/150 | 15 | 20 | | 68.5 | - | - | - | - | - | - | 64 | 63 | 61.5 | 59 | 50 | 41 | | | | | 80x80 |
| 80-250/185 | 18.5 | 25 | | 79 | - | - | - | - | - | - | 75.8 | 74.8 | 74 | 71.5 | 63.5 | 55.5 | 47 | | | | 80x80 |
| 80-250/220 | 22 | 30 | H(m) | 89.5 | - | - | - | - | - | - | 86 | 85.3 | 84 | 81.5 | 73.5 | 65.5 | 57 | | | | 80x80 |
| 100-125/40 | 4 | 5.5 | | 19 | - | - | - | - | - | - | - | - | 17.3 | 16.8 | 14.5 | 13 | 11.8 | | | | 100x100 |
| 100-125/55 | 5.5 | 7.5 | | 23 | - | - | - | - | - | - | - | - | 21.3 | 20.9 | 19 | 17.5 | 16.7 | 13.7 | | | 100x100 |
| 100-125/75 | 7.5 | 10 | | 27 | - | - | - | - | - | - | - | - | 26 | 25.6 | 24.5 | 23 | 22.5 | 20 | 18 | | 100x100 |
| 100-160/92 | 92 | 12.5 | | 33 | - | - | - | - | - | - | - | - | - | 31.5 | 30 | 28 | 27.1 | 24 | 21.5 | | 100x100 |
| 100-160/110 | 11 | 15 | | 36 | - | - | - | - | - | - | - | - | - | 34.5 | 33 | 31.5 | 30.8 | 28 | 25.5 | | 100x100 |
| 100-160/150 | 15 | 20 | | 42 | - | - | - | - | - | - | - | - | - | 41 | 40 | 38.5 | 37.8 | 35 | 33 | 29.5 | 100x100 |
| 100-200/150 | 15 | 20 | | 45 | - | - | - | - | - | - | - | - | - | 45.5 | 43 | 41 | 40.2 | 36.5 | 34 | | 100x100 |
| 100-200/185 | 18.5 | 25 | | 52 | - | - | - | - | - | - | - | - | - | 52.3 | 51 | 49 | 482 | 44.5 | 42 | | 100x100 |
| 100-200/220 | 22 | 30 | | 59 | - | - | - | - | - | - | - | - | - | 59.5 | 58 | 56 | 55 | 52 | 49.5 | 44.5 | 100x100 |

## MATERIAL DESCRIPTION / *DESCRIPCI6N DE MATERIAL*

## MATERIAL DESCRIPTION / *DESCRIPCIbN DE MATERIAL*

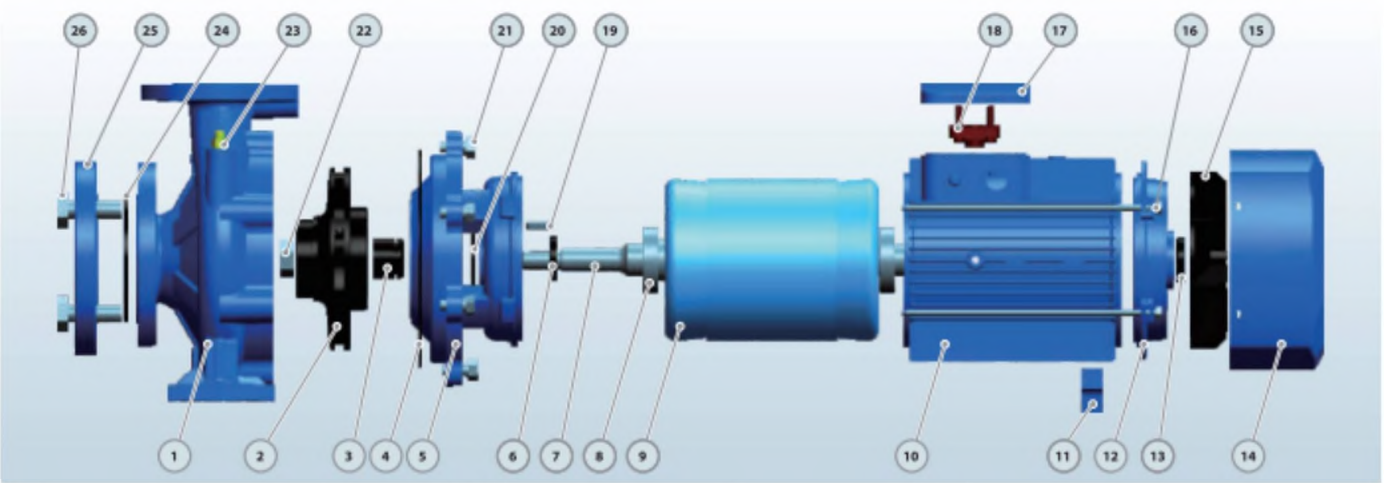


| No. | Description *Descripción* | Material *Material* | No. | Description *Descripción* | Material *Material* | No. | Description *Descripción* | Material *M aterial* |
|---|---|---|---|---|---|---|---|---|
| 1 | **Pump Case** *Cuerpo de Bomba* | **Cast iron** *Fundición* | 10 | **Motor Case** *Cuerpo de Motor* | **Aluminum** *Aluminio* | 19 | **Impeller Key** *Chaveta Impulsor* | **Iron** *Hierro* |
| 2 | **Impeller** *Impulsor* | **SS304/Cast iron** *Inox 304/Fundición* | 11 | **Support Foot** *Soporte Pie* | **Plastic** *Plástico* | 20 | **Water Deflector** *Deflector* | **Rubber CaucAo** |
| 3 | **Mechanical Seal** **C/erre** *Mec^nico* | **SiC/Carbon/SS304** *SiC-Grafrto-/nox304* | 12 | **Back Cover** *Taps Trasera* | **Cast iron** *Fundicidn* | 21 | **Connection Bolt** *Pemo* | **Steel** *Acero* |
| 4 | **O-ring** *Junta Tórica* | *Rubber Caucho* | 13 | **Reinforced Seal** *Setto Refbrzado* | **Rubber** *Caucho* | 22 | **Impeller Nut** *Tuerca de Impufsor* | **Galvanizated Steel** *Acero Galvanizado* |
| 5 | **Connection** *Conexión* | **Cast iron** *Fundición* | 14 | **Fan Cover** *Tapa Ventiiador* | **Aluminum** *Aluminio* | 23 | **Release Valve** *Tapón Cebado* | **Brass** *Bronce* |
| 6 | **Reinforced Seal** *SeHo Refbrzado* | **Rubber** *Caucho* | 15 | **Fan** *Ventiiador* | **Plastic** *Plástico* | 24 | **Gasket** *Empague* | **Rubber CaucAo** |
| 7 | **Shaft** *Eje* | **SS304/45# Steel** *Inox 304/45岔 Hierro* | 16 | **Through Bolt** *Pemo* | **Steel** *Acero* | 25 | **Counter Flange** *Contra Brida* | **Galvanizated Cast iron** *Fundicton Galvanizado* |
| 8 | **Bearing** *Rodamiento* | **Ball Bearing** *Bola Rodamiento* | 17 | **Terminal Box** *Caja de Bomes* | **Aluminum** *Aluminio* | 26 | **Flange Bolt** *Pemo de Brida* | **Steel** *Acero* |
| 9 | **Wound Stator/Rotor** *Estator/Rotor* | **Silicon Steel/Copper** *Acero al SOicio/Cobre* | 18 | *Terminal Board* *Tablero de Bomes* | **Plastic** *Plástico* | | | |

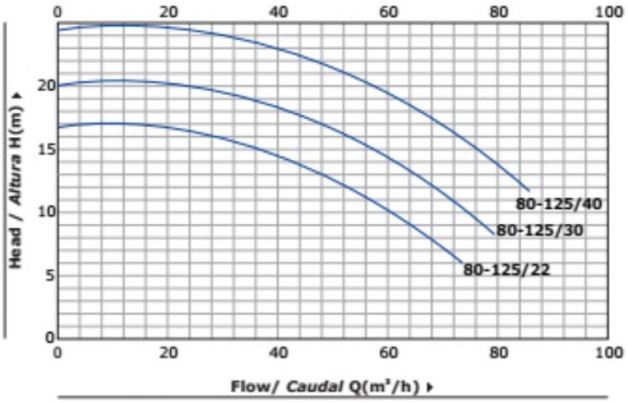


## 80-125

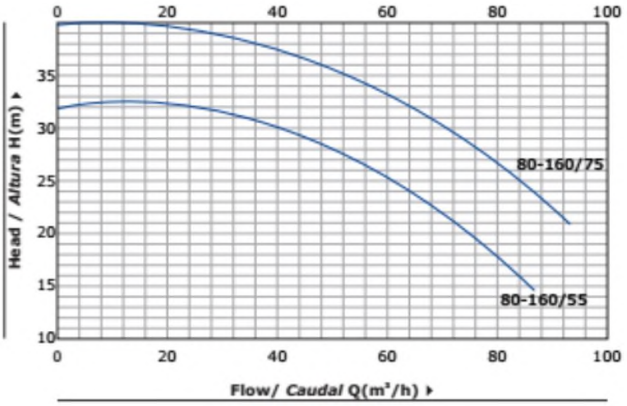


## 80-160

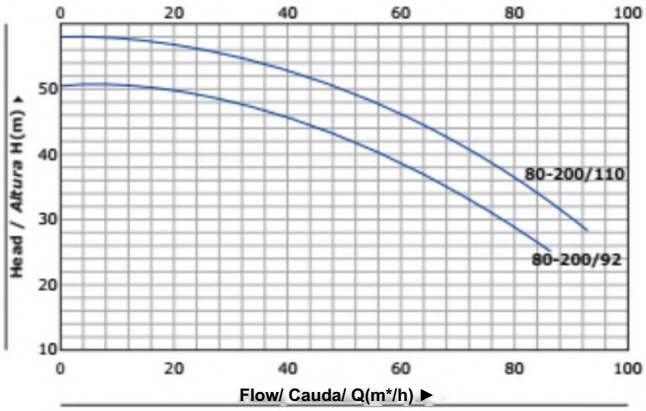


## 80-200

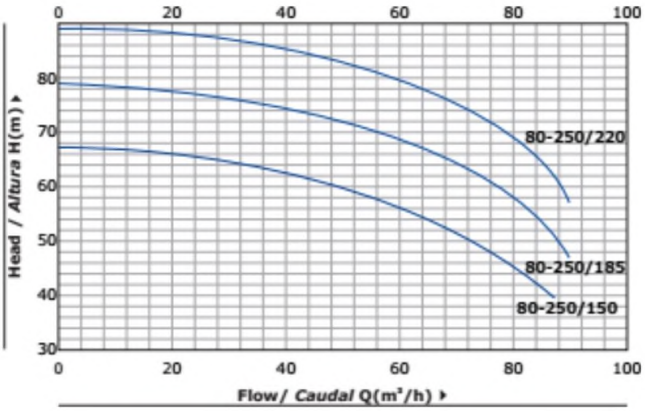


## 80-250

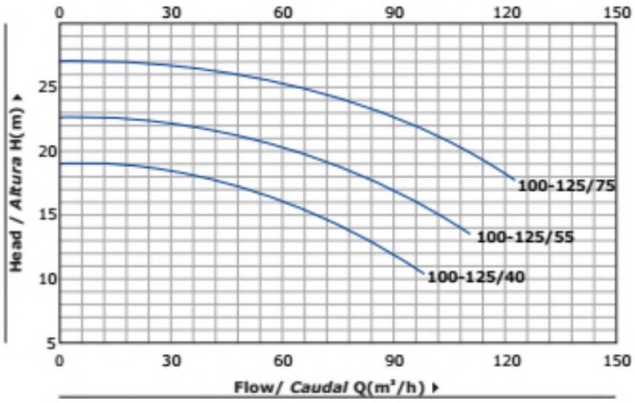


## 100-125

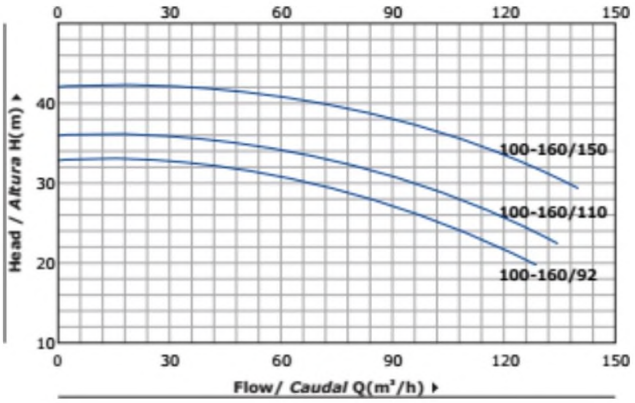


## 100-160

## PERFORMANCE CURVE / *CURVAS DE FUNCIONAMIENTO*

**50 Hz n=2900 1/min**

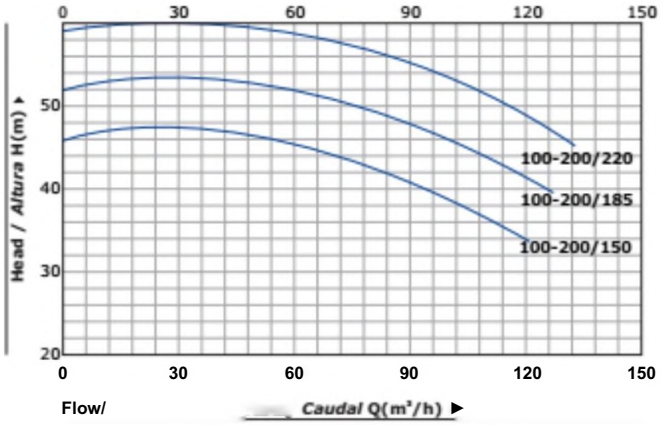


**100-200**

## DIMENSIONS AND WEIGHT / *DIMENSIONESY PESOS*

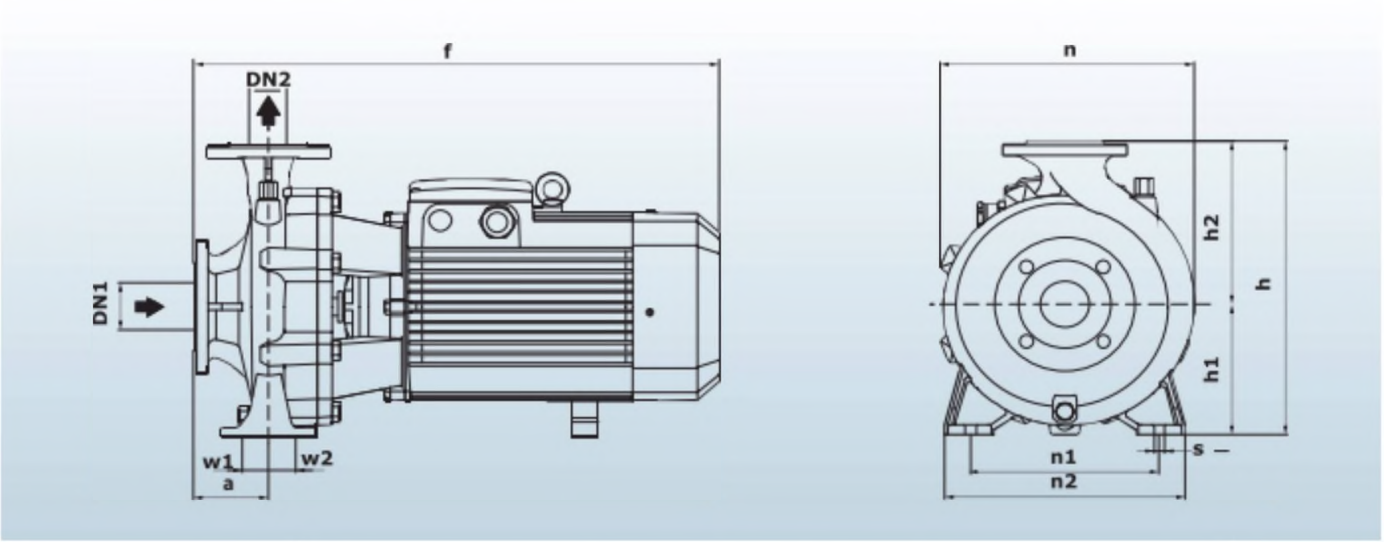


| *MODEL I MODELO* | | DIMENSIONS *I DIMENSIONES* mm | | | | | | | | | | | | | kg | |
|---|---|---|---|---|---|---|---|---|---|---|---|---|---|---|---|---|
| Single-phase *Monofásico* | Three-phase *frifásico* | DN1 | DN2 | a | f | h | M | h2 | n | n1 | n2 | w1 | w2 | s | 1- | 3* |
| 80-125/22 | 80-125/22 | | | | | | | | | | | | | | 45 | 41 |
| 80-125/30 | 80-125/30 | | | 102 | 525 | 305 | 135 | 170 | 263 | 190 | 245 | | | | 54 | 50 |
| - | 80-125/40 | | | | | | | | | | | | | | - | 52 |
| - | 80-160/55 | | | 110 | 560 | 345 | 162 | 193 | 270 | 212 | 262 | 37 | 37 | 8 | - | 64 |
| - | 80-160/75 | | | | | | | | | | | | | | - | 71 |
| - | 80-200/92 | 80 | 80 | | | | | | | | | | | | - | 90 |
| - | 80-200/110 | | | 104 | 722 | 392 | 186 | 206 | 307 | 232 | 307 | | | | - | 106 |
| - | 80-250/150 | | | | | | | | | | | | | | - | 145 |
| - | 80-250/185 | | | 102 | 720 | 416 | 186 | 230 | 330 | 250 | 327 | | | | - | 153 |
| - | 80-250/220 | | | | | | | | | | | | | | - | 183 |
| - | 100-125/40 | | | | | | | | | | | | | | - | 56 |
| - | 100-125/55 | | | 104 | 580 | 345 | 162 | 193 | 275 | 212 | 275 | | | | - | 68 |
| - | 100-125/75 | | | | | | | | | | | 49 | 49 | 10 | - | 74 |
| - | 100-160/92 | | | | | | | | | | | | | | - | 90 |
| - | 100-160/110 | 100 | 100 | 102 | 730 | | | | | | | | | | - | 106 |
| - | 100-160/150 | | | | | 415 | 162 | 230 | 275 | 250 | 330 | | | | - | 134 |
| - | 100-200/150 | | | | | | | | | | | | | | - | 140 |
| - | 100-200/185 | | | 120 | 740 | | | | | | | | | | - | 145 |
| - | 100-200/220 | | | | | | | | | | | | | | - | 185 |

# Product Specification (60HZ)

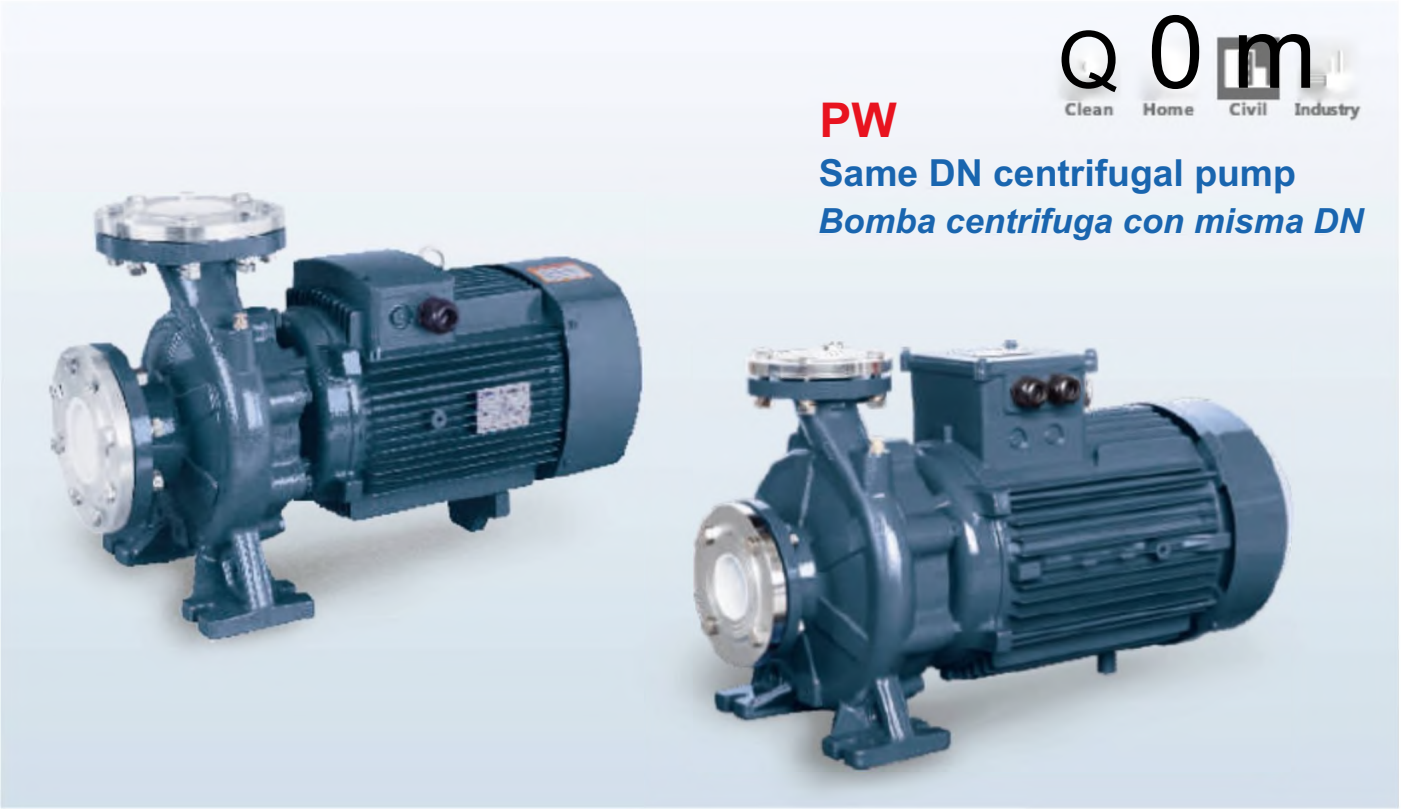


**NEW/NUEVO**

## TECHNICAL DESCRIPTION

-New design centrifugal pump
• Original design by PURITY (patented)
■ Both square motor & round motor available
-YE3 high efficient motor, with protection IP55 class F
-Pump case with anti-corrosive coating
■Impeller in stainless steel AISI 304 or cast iron
■ Shaft in stainless steel AISI 304 or galvanized iron
■ Galvanized counter flange with bolts, nuts and gaskets
• Quality NSK bearing, wear resistance mechanical seal

## APPLICATIONS

■ Suitable for use with clean water and liquids that are not chemically aggressive towards the materials from which the pump is made. The centrifugal pumps are recommended for use in water supply, cleaning sets, pressure boosting, firefighting sets, irrigation, industrial applications, water circulation in climatisation sets, agricultural.

## USING LIMITS

■ Liquid temperature between -10°C and +120°C
■ Ambient temperature up to +50°C
■ Max. working pressure 16 bar
■ Continuous service S1

## PATENTS

-Registered model PW
-Registered Patent Design no 201530478502.0

## TECHNICAL DATA / *DATOS itCNICOS*

**60 HZ n=3500 1/min**

| MODEL *MODELO* | Power *Potencia* | | l/min | Q-DELIVERY / *CAUDAL* | | | | | | | | | | | | | | | | | DN |
|---|---|---|---|---|---|---|---|---|---|---|---|---|---|---|---|---|---|---|---|---|---|
| | | | | 0 | 100 | 150 | 250 | 300 | 400 | 450 | 600 | 700 | 800 | 900 | 1200 | 1400 | 1500 | 1800 | 2000 | 2300 | |
| | kw | hp | m^/h | 0 | 6 | 9 | 15 | 18 | 24 | 27 | 36 | 42 | 48 | 54 | 72 | 84 | 90 | 108 | 120 | 138 | mm |
| 80-125/22 | 22 | 3 | | 17 | - | - | - | - | - | - | 15.4 | 14 | 128 | 1L5 | 6.5 | | | | | | 80x80 |
| 80-125/30 | 3 | 4 | | 20 | - | - | - | - | - | - | 183 | 18 | 17 | 15.6 | 11 | | | | | | 80x80 |
| 80-125/40 | 4 | 5.5 | | 24 | - | - | - | - | - | - | 23.1 | 23 | 2L5 | 20.3 | 15.8 | 1L8 | | | | | 80x80 |
| 80-1G0/55 | 5.5 | 7.5 | | 32 | - | - | - | - | - | - | 30.6 | 30 | 28 | 26.6 | 20.5 | 14.8 | | | | | 80x80 |
| 80-160/75 | 75 | 10 | | 40 | - | - | - | - | - | - | 38 | 37 | 36 | 34.4 | 29 | 24 | 21 | | | | 80x80 |
| 80-200/92 | 92 | 12.5 | | 50.5 | - | - | - | - | - | - | 463 | 45 | 43 | 40.9 | 325 | 25.7 | | | | | 80x80 |
| 80-200/110 | 11 | 15 | | 57.5 | - | - | - | - | - | - | 53.5 | 52 | 50 | 47.5 | 40 | 33 | 29 | | | | 80x80 |
| 80-250/150 | 15 | 20 | | 685 | - | - | - | - | - | - | 64 | 63 | 6L5 | 59 | 50 | 41 | | | | | 80x80 |
| 80-250/185 | 18.5 | 25 | | 79 | - | - | - | - | - | - | 75.8 | 74.8 | 74 | 7L5 | 63.5 | 55.5 | 47 | | | | 80x80 |
| 80-250/220 | 22 | 30 | H(m) | 89.5 | - | - | - | - | - | - | 86 | 853 | 84 | 8L5 | 73.5 | 65.5 | 57 | | | | 80x80 |
| 100-125/40 | 4 | 5.5 | | 19 | - | - | - | - | - | - | - | - | 17.3 | 16.8 | 14.5 | 13 | 1L8 | | | | 100x100 |
| 100-12 V55 | 55 | 75 | | 23 | - | - | - | - | - | - | - | - | 2L3 | 20.9 | 19 | 17.5 | 16.7 | 13.7 | | | 100x100 |
| 100-125/75 | 7.5 | 10 | | 27 | - | - | - | - | - | - | - | - | 26 | 25.6 | 24.5 | 23 | 225 | 20 | 18 | | 100x100 |
| 100-160/92 | 92 | 12.5 | | 33 | - | - | - | - | - | - | - | - | - | 3L5 | 30 | 28 | 27.1 | 24 | 2L5 | | 100x100 |
| 100-16Q/H0 | 11 | 15 | | 36 | - | - | - | - | - | - | - | - | - | 34.5 | 33 | 3L5 | 30.8 | 28 | 25.5 | | 100x100 |
| 100-16Q/150 | 15 | 20 | | 42 | - | - | - | - | - | - | - | - | - | 41 | 40 | 3&5 | 37.8 | 35 | 33 | 29.5 | 100x100 |
| 100-200/150 | 15 | 20 | | 45 | - | - | - | - | - | - | - | - | - | 45.5 | 43 | 41 | 40.2 | 36.5 | 34 | | 100x100 |
| 100-200/185 | 18.5 | 25 | | 52 | - | - | - | - | - | - | - | - | - | 523 | 51 | 49 | 4&2 | 44.5 | 42 | | 100x100 |
| 100-200/220 | 22 | 30 | | 59 | - | - | - | - | - | - | - | - | - | 59.5 | 58 | 56 | 55 | 52 | 49.5 | 44.5 | 100x100 |

## MMERIAL DESCRIPTION / *DESCMPCI6N DE MATERIAL*

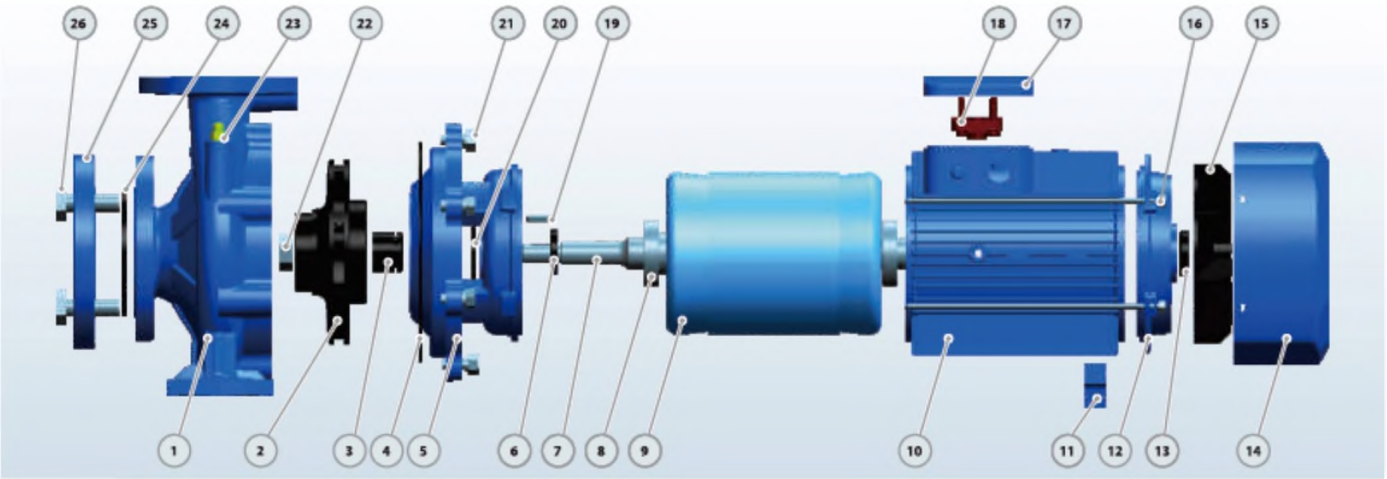


| No. | Description *Descrip ciôn* | Material *Ma renal* | No. | Description *Descripciôn* | Material Material | No. | Description *Descripciôn* | Material *M aierial* |
|---|---|---|---|---|---|---|---|---|
| 1 | **Pump Case** *Cuerpo de Bomba* | **Cast iron** *Fundiciôn* | 10 | **Motor Case** *Cuerpo de Motor* | **Aluminum** *Alummio* | 19 | **Impeller Key** *Chaveta Impulsor* | **Iron** *Hierro* |
| 2 | **Impeller** *Impulsor* | **SS304/Cast iron** *Inox 304斤undicidn* | 11 | **Support Foot** *Soporte Pie* | **Plastic** *Piistico* | 20 | **Water Deflector** *Deflector* | **Rubber Caucho** |
| 3 | **Mechanical Seal** *Cierre Mecsnico* | **SiC/Carbon/SS304** *SiC-Grafito-/nox304* | 12 | **Back Cover** *Taps Trasers* | **Cast iron** *Fundicidn* | 21 | **Connection Bolt** *Pemo* | **Steel** *Acero* |
| 4 | **O-ring** *Junta Tôrica* | *Rubber Caucho* | 13 | **Reinforced Seal** *Setto Reforzado* | **Rubber CaucAo** | 22 | **Impeller Nut** *Tuerca de Impulsor* | **Galvanizated Steel Acero** *Galvanizado* |
| 5 | **Connection** *Conexiôn* | **Cast iron** *Fundiciôn* | 14 | **Fan Cover** *Tapa Ventilador* | **Aluminum** *Afummio* | 23 | **Release Valve** *Tapôn Cebado* | **Brass** *Bronce* |
| 6 | **Reinforced Seal** *SeUo Refbrzado* | **Rubber** *Caucho* | 15 | **Fan** *Ventilador* | **Plastic** *Piâstico* | 24 | **Gasket** *Empague* | **Rubber Caucfto** |
| 7 | **Shaft** *Eje* | **SS304/45# Steel** *Inox 304/45林 Hierro* | 16 | **Through Bolt** *Pemo* | **Steel** *Acero* | 25 | **Counter Flange** *Contra Brida* | **Galvanizated Cast iron** *Fundic îon Galvanizado* |
| 8 | **Bearing** *Rodamierrto* | **Ball Bearing** *Bola Rodamiento* | 17 | **Terminal Box** *Caja de Bomes* | **Aluminum** *Alummio* | 26 | **Flange Bolt** *Pemo de Brida* | **Steel Acero** |
| 9 | **Wound Stator/Rotor** *Estator/Rotor* | **Silicon Steel/Copper** *Acero al SOicio/Cobre* | 18 | *Terminal Board Tablero de Bomes* | **Plastic** *Piâstico* | | | |

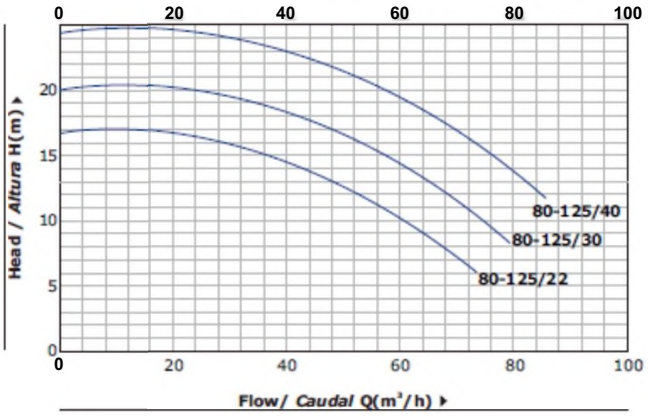


80-125

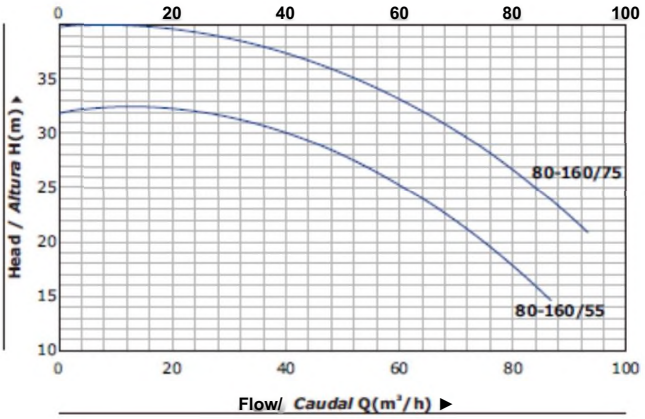


80-160

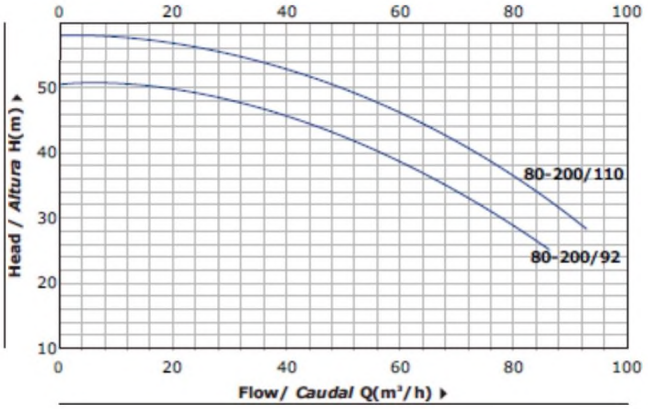


80-200

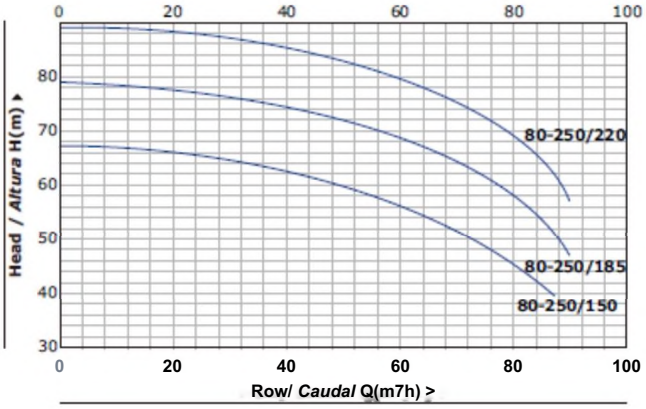


80-250

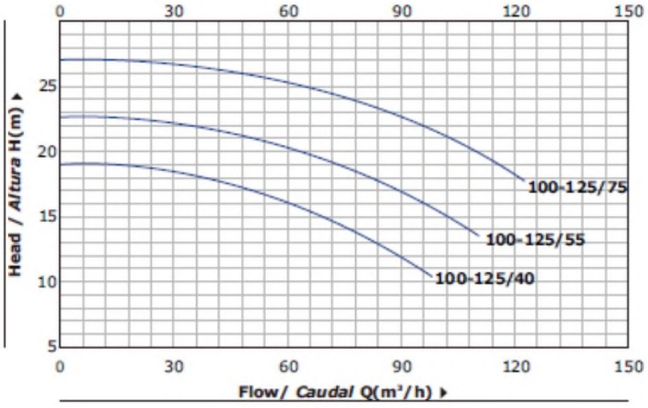


100-125

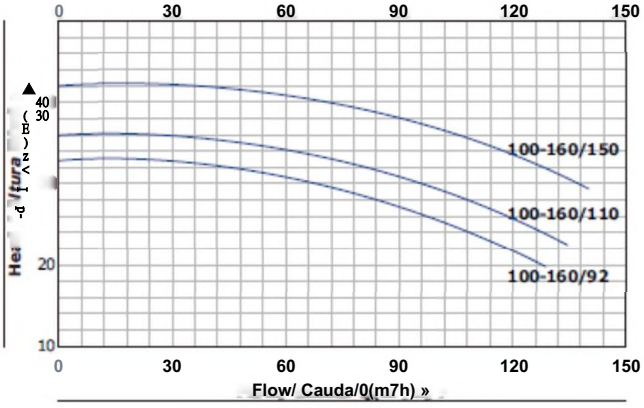


100-160

## PERFORMANCE CURVE / *CURVASDEFUNOONAMIENTO*

**60 HZ n=3500 1/min**

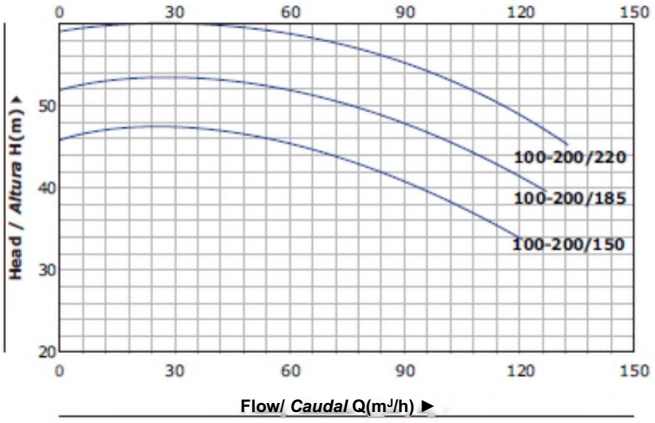


**100-200**

## DIMENSIONS AND WEIGHT / *DIMENSIONES YPESOS*

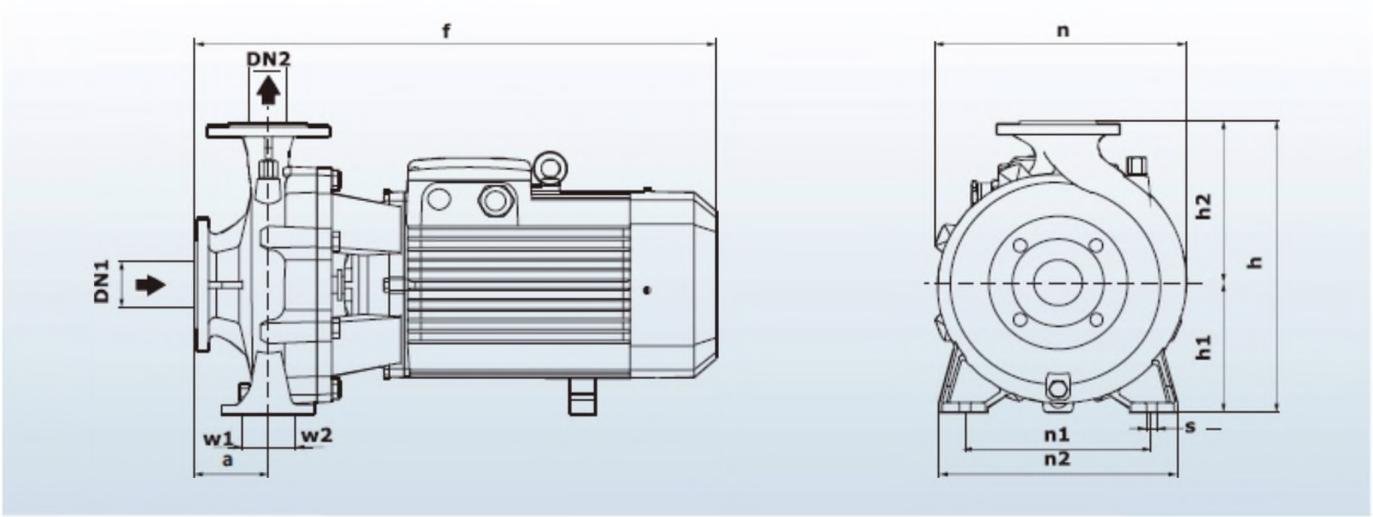


| MODEL / *MODELO* | | DIMENSIONS / *DIMENSIONES* mm | | | | | | | | | | | | | kg | |
|---|---|---|---|---|---|---|---|---|---|---|---|---|---|---|---|---|
| Single-phase *Monofásico* | Three-phase *Trifásico* | DN1 | DN2 | a | f | h | h1 | h2 | n | n1 | n2 | w1 | w2 | s | 1~ | 3~ |
| 80-125/22 | 80-125/22 | 80 | 80 | 102 | 525 | 305 | 135 | 170 | 263 | 190 | 245 | 37 | 37 | 8 | 45 | 41 |
| 80-125/30 | 80-125/30 | | | | | | | | | | | | | | 54 | 50 |
| - | 80-125/40 | | | | | | | | | | | | | | - | 52 |
| - | 80-160/55 | | | 110 | 560 | 345 | 162 | 193 | 270 | 212 | 262 | | | | - | 64 |
| - | 80-160/75 | | | | | | | | | | | | | | - | 71 |
| - | 80-200/92 | | | 104 | 722 | 392 | 186 | 206 | 307 | 232 | 307 | | | | - | 90 |
| - | 80-200/110 | | | | | | | | | | | | | | - | 106 |
| - | 80-250/150 | | | 102 | 720 | 416 | 186 | 230 | 330 | 250 | 327 | 49 | 49 | 10 | - | 145 |
| - | 80-250/185 | | | | | | | | | | | | | | - | 153 |
| - | 80-250/220 | | | | | | | | | | | | | | - | 183 |
| - | 100-125/40 | 100 | 100 | 104 | 580 | 345 | 162 | 193 | 275 | 212 | 275 | | | | - | 56 |
| - | 100-125/55 | | | | | | | | | | | | | | - | 68 |
| - | 100-125/75 | | | | | | | | | | | | | | - | 74 |
| - | 100-160/92 | | | 102 | 730 | 415 | 186 | 230 | 330 | 250 | 330 | | | | - | 90 |
| - | 100-160/110 | | | | | | | | | | | | | | - | 106 |
| - | 100-160/150 | | | | | | | | | | | | | | - | 134 |
| - | 100-200/150 | | | 120 | 740 | | | | | | | | | | - | 140 |
| - | 100-200/185 | | | | | | | | | | | | | | - | 145 |
| - | 100-200/220 | | | | | | | | | | | | | | - | 185 |


# Horizontal Water Pumps PXZ

## Self-priming Centrifugal water Pump

### TECHNICAL DESCRIPTION

- New self-priming centrifugal pump
- Original design by PURITY (patented)
- Both square motor & round motor available
- YE3 high efficient motor, with protection IP55 class F
- Pump case with anti-corrosive coating
- Impeller in stainless steel AISI 304 or cast iron
- Shaft in stainless steel AISI 304 or galvanized iron
- Suction and discharge port in G20 thread
- Quality NSK bearing, wear resistance mechanical seal

# Product Specification (50HZ)


**NEW/NUEVO**

## TECHNICAL DESCRIPTION

■ New self-priming centrifugal pump
-Original design by PURITY (patented)
■ Both square motor & round motor available
-YE3 high efficient motor, with protection IP55 class F
■ Pump case with anti-corrosive coating
■Impeller in stainless steel AISI 304 or cast iron
■ Shaft in stainless steel AISI 304 or galvanized iron
■ Suction and discharge port in G20 thread
• Quality NSK bearing, wear resistance mechanical seal

## APPLICATIONS / APLICACIONES

-Suitable for use with liquids that are not chemically aggressive towards the materials from which the pump is made.
-The self-priming centrifugal pumps are recommended for use in water supply systems,washing systems, pressure systems, irrigation pumps, liquids transfer.

## USING LIMITS

■Liquid temperature between -10°C and +120°C
■Ambient temperature up to +50°C
■Max. working pressure 16 bar
■Continuous service S1

## PATENTS / PATENTES

-Registered model PXZ
-Registered Patent Design no 201530016935.4

50 Hz n=2900

## TECHNICAL DATA / *DATOS TECNICOS*

1/min

| MUUtL MODELO Single-phase *Monofasico* | Three-phase *Trifasico* | Hower *Potencia* hp | kw | Max U *Q maximo* m"h | Max H *H maximo* m | Hated Q *Q nominal* mVh | Kated H *H nominal* m | suction H *H aspiracion* m | RPM | impeller *Impulsor* | DN mm |
|---|---|---|---|---|---|---|---|---|---|---|---|
| 15-30-1.5m | 15-30-1.5 | 1.5 | 2 | 15 | 30 | 8 | 23 | 8 | 2900 | SS304 / Inox304 | 40x40 |
| 18-28-1.5m | 18-28-1.5 | 1.5 | 2 | 18 | 28 | 10 | 20 | 8 | 2900 | SS304 / Inox304 | 50x50 |
| 18-35-2.2m | 18-35-2.2 | 22 | 3 | 18 | 35 | 10 | 25 | 8 | 2900 | SS304 / Inox304 | 40x40 |
| 20-32-2.2m | 20-32-2.2 | 22 | 3 | 20 | 32 | 12 | 22 | 8 | 2900 | SS304 / Inox304 | 50x50 |
| 22-40-3m | 22-40-3 | 3 | 4 | 22 | 40 | 12 | 28 | 8 | 2900 | SS304 / Inox304 | 50x50 |
| - | 25-45-4 | 4 | 5.5 | 25 | 45 | 15 | 30 | 8 | 2900 | SS304/Inox304 | 50x50 |
| W15-25-1.5m | W15-25-1.5 | 1.5 | 2 | 15 | 25 | 10 | 18 | 8 | 2900 | Cast iron / Fundicion | 50x50 |
| W18-30-2.2m | W18-30-2.2 | 22 | 3 | 18 | 30 | 10 | 20 | 8 | 2900 | Cast iron / Fundicion | 50x50 |
| W25-35-3m | W25-35-3 | 3 | 4 | 25 | 35 | 12 | 22 | 8 | 2900 | Cast iron / Fundicion | 50x50 |
| ■ | W28-38-4 | 4 | 5.5 | 28 | 38 | 15 | 25 | 8 | 2900 | Cast iron / Fundicion | 50x50 |

## MATERIAL DESCRIPTION / *DESCRIPCIbN DE MATERIAL*

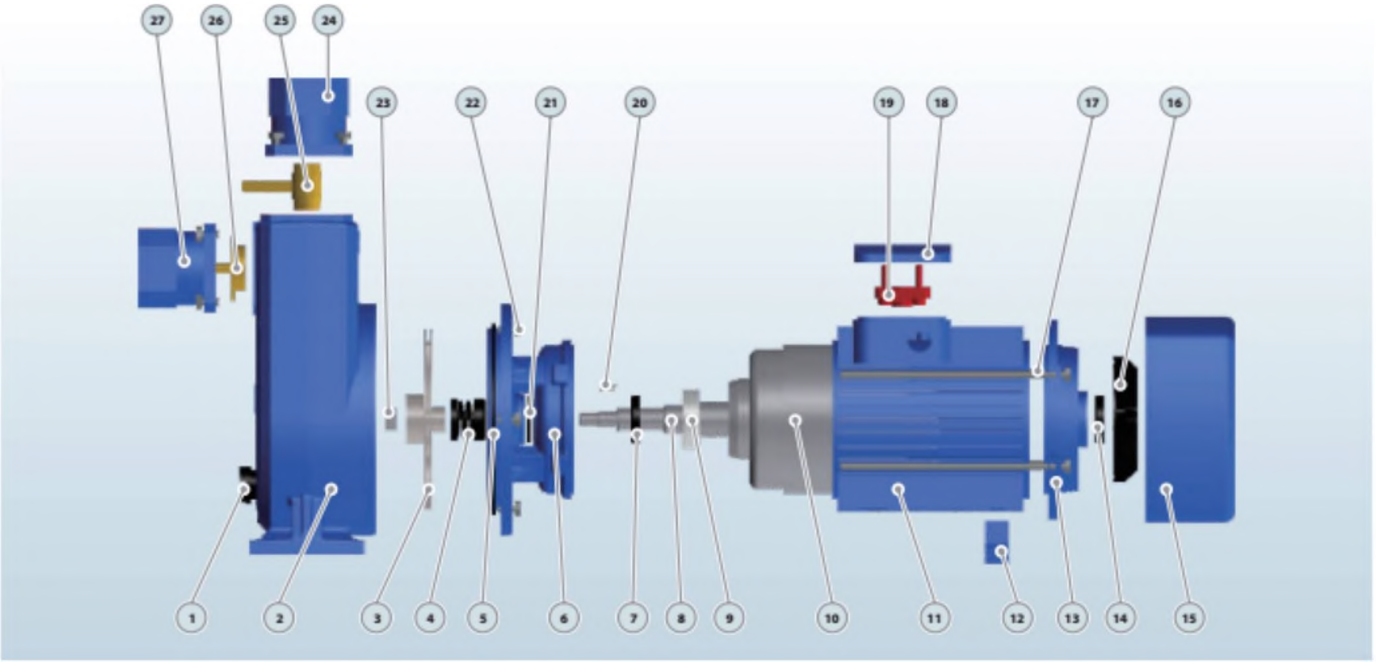


| No. | Description Descripcion | Material Material | No. | Description *Descripcion* | Material *Material* | No. | Description *Descripcion* | Material *M aterial* |
|---|---|---|---|---|---|---|---|---|
| 1 | Release Valve *Tapon Cebado* | Plastic *Plastico* | 10 | Wound Stator/Rotor Esta for/Rotor | Sificon SteeLCopper *Acero al SSicio/Cobre* | 19 | *Terminal Board Tablero de Bomes* | Plastic *Plastico* |
| 2 | Pump Case *Cuerpo de Bomba* | Cast iron *Fundicion* | 11 | Motor Case *Cuerpo de Motor* | Aluminum *Aluminio* | 20 | Impeller Key *Chaveta Impulsor* | Iron *Hierro* |
| 3 | Impeller *Impulsor* | SS304/Cast iron *Inox304/Fundici6n* | 12 | Support Foot *Soporte Pie* | Plastic *Plastico* | 21 | Water Deflector *Deflector* | Rubber *Caucho* |
| 4 | Mechanical Seal *Ciene Mecanico* | SiC/Carbon/SS304 *GiG-Grafito-tnox304* | 13 | Back Cover *Tapa Trasera* | Cast iron Fundicion | 22 | Connection Bolt *Pemo* | Steel *Acero* |
| 5 | O-ring *Junta Torica* | Rubber *Caucho* | 14 | Reinforced Seal Seffo *Reforzado* | Rubber *Caucho* | 23 | Impeller Nut *Tuerca de Impulsor* | Gakanizated Steel *Acero Galvanizado* |
| 6 | Connection Conexion | Cast iron *Fundicion* | 15 | Fan Cover *Tapa VentHador* | Aluminum *Aluminio* | 24 | Discharge *Impulsion* | Cast iron *Fundicion* |
| 7 | Reinforced Seal *Selk) Reforzado* | Rubber *Caucho* | 16 | Fan *Ventiador* | Plastic *Plastico* | 25 | Ball Valve *Valvula Bola* | Brass *Bronce* |
| 8 | Shaft 眯 | SS304/45# Steel *Inox 304/45番 Hierro* | 17 | Through Bolt *Pemo* | Steel *Acero* | 26 | Check Valve *Vafvula Retencion* | Brass Bronce |
| 9 | Bearing *Rodamiento* | Ball Bearing *Bola Rodamiento* | 18 | Terminal Box *Caja de Bomes* | Aluminum *Aluminio* | 27 | Suction *Aspiracidn* | Cast iron *Fundicion* |

# Product Specification (60HZ)


**NEW/NUEVO**

## TECHNICAL DESCRIPTION

-New self-priming centrifugal pump
-Original design by PURITY (patented)
■ Both square motor & round motor available
-YE3 high efficient motor, with protection IP55 class F
-Pump case with anti-corrosive coating
■Impeller in stainless steel AISI 304 or cast iron
■ Shaft in stainless steel AISI 304 or galvanized iron
■ Suction and discharge port in G20 thread
• Quality NSK bearing, wear resistance mechanical seal

## APPLICATIONS / APLICACIONES

■ Suitable for use with liquids that are not chemically aggressive towards the materials from which the pump is made.
• The self-priming centrifugal pumps are recommended for use in water supply systems,washing systems, pressure systems, irrigation pumps, liquids transfer.

## USING LIMITS

■ Liquid temperature between -10°C and +120°C
■ Ambient temperature up to +50°C
■ Max. working pressure 16 bar
■ Continuous service S1

## PATENTS / PATENTES

-Registered model PXZ
-Registered Patent Design no 201530016935.4

## TECHNICAL DATA / *DATOS TtCNICOS*

**60 HZ n=35001/min**

| MODEL *unnei n* | | Power *Potencia* | | MaxQ *Q máximo* | MaxH *H máximo* | RatwlQ *Qnominai* | Rated H *H nominal* | Suction H *H 9sp!nci6n* | RPM | Impeller *Impulsor* | DN |
|---|---|---|---|---|---|---|---|---|---|---|---|
| Single-phase *Monof^sico* | Thre»-phase *Trifásico* | hp | kw | m*/h | m | mVh | m | m | | | *mm* |
| 15-30>L5m | 15-30-1.5 | 15 | 2 | 15 | 30 | 8 | 23 | 8 | 3500 | SS304/Inox304 | 40x40 |
| 18-28-1.5m | 18-28-1.5 | 15 | *2* | 18 | 28 | 10 | 20 | 8 | 3500 | SS304/Ina (304 | 50x50 |
| 18>35-Z2m | 18-3S-2J | *22* | *3* | 18 | 35 | 10 | 25 | 8 | 3500 | SS304/Inooc304 | 40x40 |
| 20-32-Z2m | 20-32-2^ | *22* | 3 | 20 | 32 | 12 | 22 | 8 | 3500 | SS304/Ina (304 | 50x50 |
| 22-40-3m | 22-40-3 | 3 | 4 | 22 | 40 | 12 | 28 | 8 | 3500 | SS304/Inox304 | 50x50 |
| ■ | 25-45-4 | 4 | 5.5 | 25 | 45 | 15 | 30 | 8 | 3500 | SS304/Ina»c304 | 50x50 |
| W15-25-L5fn | W15-25-L5 | L5 | 2 | 15 | 25 | 10 | 18 | 8 | 3500 | Cast iron / Fundic ión | 50x50 |
| WIS<30-Z2m | W18-30-Z2 | *22* | 3 | 18 | 30 | 10 | 20 | 8 | 3500 | Cast iron / Fundic ión | 50x50 |
| W25-35-3m | W25<35-3 | 3 | 4 | 25 | 35 | 12 | 22 | 8 | 3500 | Cast iron / Fundic ión | 50x50 |
| ■ | W28-38-4 | 4 | 5.5 | 28 | 38 | 15 | 25 | 8 | 3500 | Cast iron / Fundic ión | 50x50 |

**W= Sewage water available/ *Aguas sucias disponible***

## MATERIAL DESCRIPTION / *DESCMPO6N DE MATERIAL*

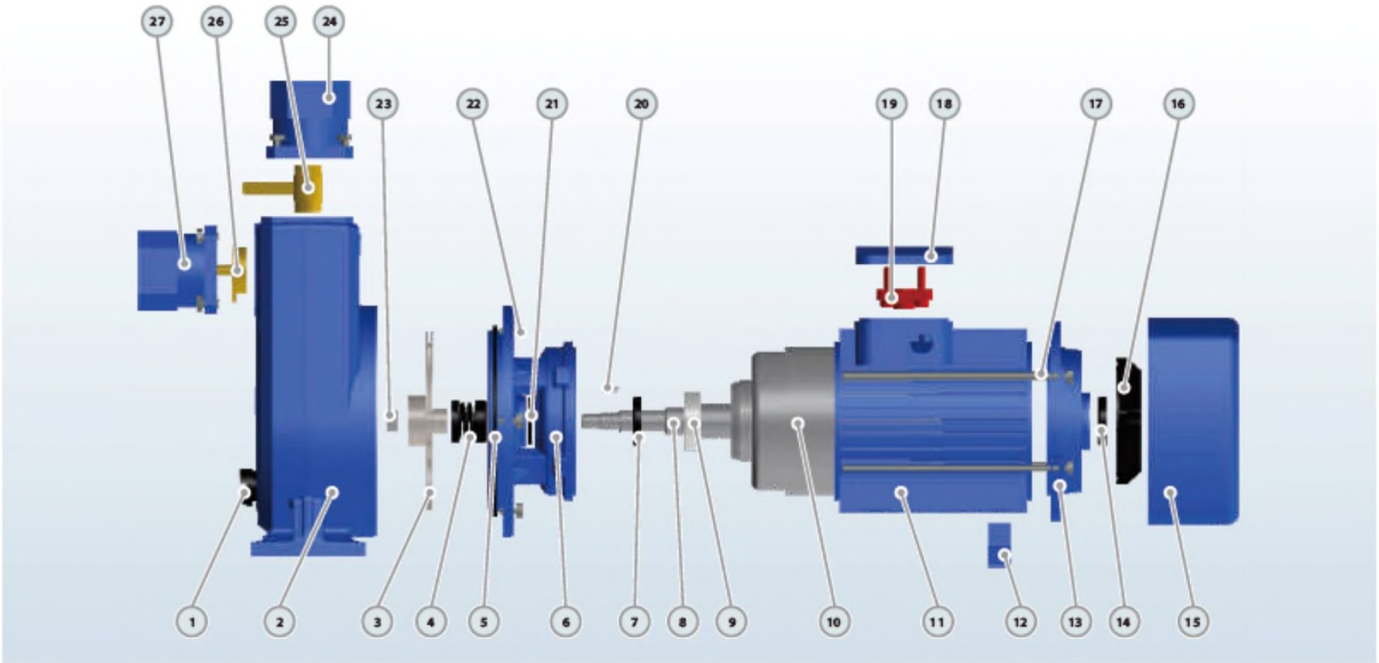


| No. | Description *Descripción* | Material *Material* | No. | Description *Descripción* | Material *Material* | No. | Description *Descripción* | Material *M aterial* |
|---|---|---|---|---|---|---|---|---|
| 1 | Release Valve *Tapón Cebado* | Plastic 战伽*p:* | 10 | Wound Stator/Rotor *Estator / Rotor* | Sificon SteelCopper *Acero si SJJiiJQ/G/)tUR* | 19 | *Terminal Board jAbi&cade* 石 稱芦4 | Plastic 视伽a |
| 2 | Pump Case *Cuerpo de fi/mUba* | Cast iron *EMdxJQJk* | 11 | Motor Case *GuejjiOi de Motor* | Aluminum *Aluminio* | 20 | Impeller Key *Chaveta Impulsor* | Iron *tiiRoa* |
| 3 | Impeller *Impulsor* | SS304/Cast iron *Inox304/^juidjijQn.* | 12 | Support Foot *SofiQlt&Pie* | Plastic *Plástico* | 21 | Water Deflector *Deflector* | Rubber *Caucho* |
| 4 | Mechanical Seal *CdffJXMecánico* | SiG.'Carbon.'SS304 *SiC-Grafito-Inox304* | 13 | Back Cover *TapaJi&seza* | Cast iron *Fundición* | 22 | Connection Bolt *Perno* | Steel *Az&xo,* |
| 5 | O-ring Junta *InncA* | Rubber *Caucho* | 14 | Reinforced Seal *Sello Reforzado* | Rubber G存只cfto. | 23 | Impeller Nut *Tuerca de Impulsor* | Galvanizated Steel Acgffl fi 她 anizado |
| 6 | Connection *Conexión* | Cast iron *Fundición* | 15 | Fan Cover *Tapa!* 胞恤 | Aluminum *Akmuiun* | 24 | Discharge *Impulsión* | Cast iron *Fundición* |
| 7 | Reinforced Seal *Sello Reforzado* | Rubber *Caucho* | 16 | Fan *VAOt*柄舶*f* | Plastic *Plástico* | 25 | Ball Valve *MmlABola* | Brass fi 電nce |
| 8 | Shaft 雄 | SS304/45# Steel *Inox 304/45# Hierro* | 17 | Through Bolt g视Q | Steel *Acero* | 26 | Check Valve 间 *lvula Retenc*始 o. | Brass g獅郎 |
| 9 | Bearing *Rodami&aiCL* | Ball Bearing *Bole RodABUAnio.* | 18 | Terminal Box *Qai^de Bornes* | Aluminum *Aluminio* | 27 | Suction 4.SP 相*ción* | Cast iron *Fundición* |

# Horizontal Water Pumps P2C

## P2C

TECHNICAL DESCRIPTION

-New double impeller centrifugal pump

-Original design by PURITY

■ Both square motor & round motor available

-YE3 high efficient motor, with protection IP55 class F

■ Pump case with anti-corrosive coating

■ Double impeller in brass

-Shaft in stainless steel AISI 304 or galvanized iron

■ Suction and discharge port in G20 thread

• Quality NSK bearing, wear resistance mechanical seal

# Product Specification (50HZ)


**NEW/NUEVO**

TECHNICAL DESCRIPTION

-New double impeller centrifugal pump
-Original design by PURITY
■ Both square motor & round motor available
-YE3 high efficient motor, with protection IP55 class F
-Pump case with anti-corrosive coating
■ Double impeller in brass
■ Shaft in stainless steel AISI 304 or galvanized iron
■ Suction and discharge port in G20 thread
• Quality NSK bearing, wear resistance mechanical seal

USING LIMITS

■ Liquid temperature between -10°C and +120°C
■ Ambient temperature up to +50°C
■ Max. working pressure 16 bar
■ Continuous service S1

APPLICATIONS

■ Suitable for use with clean water and liquids that are not chemically aggressive towards the materials from which the pump is made.
• The high efficiency and adaptability of these pumps to even the most unusual of applications, makes them ideal for use in the domestic, civil and industrial sectors; in particular for the distribution of water in combination with pressure sets, for pressure boosting and in fire-fighting sets.

## TECHNICAL DATA / *DATOS TECNICOS*

**50 Hz n=2900 1/min**

| MODEL *MODELO* | Power *Potencia* | | l/min | Q=DELIVERY/GAODAZ. | | | | | | | | | | | | | | | | | | | DN |
|---|---|---|---|---|---|---|---|---|---|---|---|---|---|---|---|---|---|---|---|---|---|---|---|
| | | | | 0 | 40 | 50 | 60 | 70 | 80 | 90 | 100 | 110 | 120 | 140 | 160 | 180 | 200 | 250 | 300 | 350 | 400 | 450 | |
| | kw | hp | m³/h | 0 | 2.4 | 3 | 3.6 | 4.2 | 4.8 | 5.4 | 6 | 6.6 | 7*2 | 8.4 | 9.6 | 10.8 | 12 | 15 | 18 | 21 | 24 | 27 | mm |
| 25-140/11 | 1.1 | 1.5 | | 54 | 47.5 | 44.5 | 41 | 37 | 33 | 28 | 22 | | | | | | | | | | | | 32x25 |
| 25-140/15 | 1.5 | 2 | | 67 | 60 | 57 | 54 | 50 | 45 | 40 | 32 | | | | | | | | | | | | 32x25 |
| 25-160/11 | 1.1 | 1.5 | | 47 | 44 | 42 | 40 | 38 | 35 | 33 | 30 | 27 | 24 | | | | | | | | | | 32x25 |
| 25-160/15 | 1.5 | 2 | | 58 | 54 | 53 | 51 | 49 | 47 | 45 | 43 | 40 | 37 | 30 | | | | | | | | | 32x25 |
| 25-160/22 | 2.2 | 3 | | 68 | 64.5 | 63 | 62 | 60 | 58 | 56 | 54 | 51 | 48 | 41 | 32 | | | | | | | | 32x25 |
| 32-200/30 | 3 | 4 | | 70 | | | | | 63 | 62 | 60.5 | 59 | 57 | 55 | 52 | 49.5 | 46.5 | 36 | | | | | 40x32 |
| 32-200/40 | 4 | 5.5 | | 85 | | | | | 77 | 76 | 75 | 74 | 72 | 69 | 66 | 62 | 58 | 49 | | | | | 40x32 |
| 32-210/55 | 5.5 | 7.5 | | 94 | | | | | 91 | 90 | 89 | 87 | 85 | 83 | 79 | 75 | 70 | 56 | | | | | 50x32 |
| 32-210/75 | 75 | 10 | | 112 | | | | | 110 | 109 | 108 | 107 | 105 | 102 | 99 | 94 | 89 | 74 | | | | | 50x32 |
| 40-210/55 | 5.5 | 7.5 | | 94 | | | | | 91 | 90 | 89 | 87 | 85 | 83 | 79 | 75 | 70 | 56 | | | | | 50x40 |
| 40-210/75 | 7.5 | 10 | | 112 | | | | | 110 | 109 | 108 | 107 | 105 | 102 | 99 | 94 | 89 | 74 | | | | | 50x40 |
| 50-180/40 | 4 | 5.5 | | 62 | | | | | 59 | 58 | 57 | 56 | 55 | 55 | 50 | 43 | 44 | 36 | 31 | 23 | | | 50x50 |
| 50-180/55 | 5.5 | 7.5 | H (m) | 72 | | | | | 69 | 68 | 67 | 66 | 65 | 65 | 60 | 58 | 54 | 46 | 41 | 33 | | | 50x50 |
| 50-180/75 | 7.5 | 10 | | 84 | | | | | 81 | 80 | 79 | 78 | 76 | 75 | 72 | 72 | 66 | 58 | 53 | 45 | | | 50x50 |
| 40-200/92 | 9.2 | 12.5 | | 97 | | | | | | | | | | 91.5 | 91 | 90 | 88 | 85 | 80 | 74 | 68 | 61 | 50x40 |
| 40-200/110 | 11 | 15 | | 105 | | | | | | | | | | 100 | 99 | 98 | 97 | 93 | 88 | 83 | 76 | 69 | 50x40 |
| 50-200/92 | 9.2 | 12.5 | | 97 | | | | | | | | | | 91.5 | 91 | 90 | 88 | 85 | 80 | 74 | 68 | 61 | 50x50 |
| 50-200/110 | 11 | 15 | | 105 | | | | | | | | | | 100 | 99 | 98 | 97 | 93 | 88 | 83 | 76 | 69 | 50x50 |
| 40-250/130 | 13 | 17.5 | | 1?0 | | | | | | | | | | 114 | 113 | 11? | 110 | 107 | 103 | 98 | 91 | 82 | 50x40 |
| 40-250/150 | 15 | 20 | | 130 | | | | | | | | | | 124 | 123 | 122 | 120 | 117 | 113 | 108 | 102 | 92 | 50x40 |
| 40-250/185 | 18.5 | 25 | | 145 | | | | | | | | | | 139 | 138 | 137 | 136 | 131 | 126 | 121 | 114 | 107 | 50x40 |
| 40-250/220 | 22 | 30 | | 160 | | | | | | | | | | 155 | 153 | 152 | 151 | 146 | 141 | 135 | 130 | 122 | 50x40 |
| 50-250/130 | 13 | 17.5 | | 120 | | | | | | | | | | 114 | 113 | 112 | 110 | 107 | 103 | 98 | 91 | 82 | 50x50 |
| 50-250/150 | 15 | 20 | | 130 | | | | | | | | | | 124 | 123 | 122 | 120 | 117 | 113 | 108 | 102 | 92 | 50x50 |
| 50-250/185 | 18.5 | 25 | | 145 | | | | | | | | | | 139 | 138 | 137 | 136 | 131 | 126 | 121 | 114 | 107 | 50x50 |
| 50-250/220 | 22 | 30 | | 160 | | | | | | | | | | 155 | 153 | 152 | 151 | 146 | 141 | 135 | 130 | 122 | 50x50 |

We reserve the technique modification right *Nos reservsmos el derecho de la modificacion tecnica*

## MATERIAL DESCRIPTION / *DESCRIPCIbN DE MATERIAL*

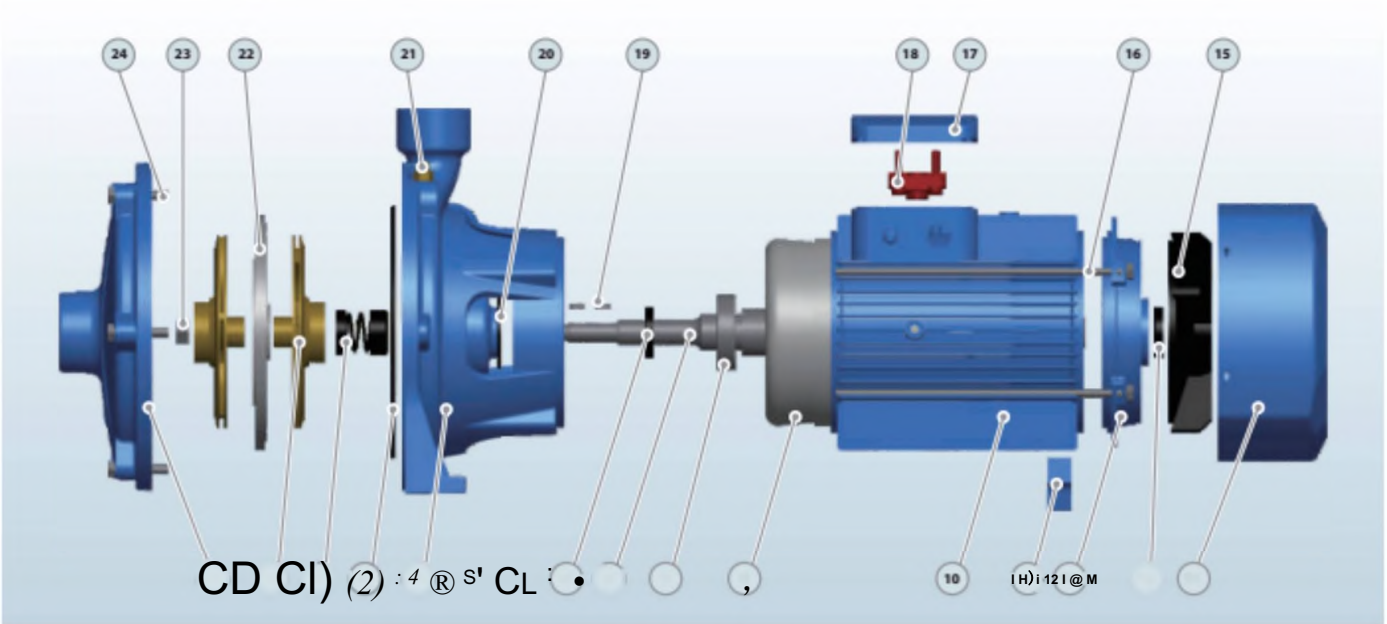

| No. | Description<br>*Descripción* | Material<br>*Material* | No. | Description<br>**Descripción** | Material<br>***Material*** | No. | Description<br>*Descripción* | Material<br>***Materia/*** |
|---|---|---|---|---|---|---|---|---|
| **1** | Pump Case<br>*Cuerpo de Bomba* | Cast iron<br>*Fundición* | **9** | Wound Stator/Rotor<br>*Estator/Rotor* | Silicon Steel/Copper<br>*Acero al SHicio/Cobre* | 17 | Terminal Box<br>*Cajs de Bomes* | Aluminum<br>*Aluminio* |
| **2** | Impeller<br>*Impulsor* | Brass<br>*Bmnce* | **10** | Motor Case<br>*Cuerpo de Motor* | Aluminum<br>*Aluminio* | 18 | *Terminal Board*<br>*Tablero de Bomes* | Plastic<br>*Plástico* |
| **3** | Mechanical Seal<br>*Cierre Mecánico* | SiC/Carbon/SS304<br>*SiC-Grafito-Inox304* | **11** | Support Foot<br>*Soporte Pie* | Plastic<br>*Plástico* | 19 | Impeller Key<br>*Chaveta Impulsor* | Iron<br>*Hierro* |
| **4** | O-ring<br>Junta *Tórics* | *Rubber*<br>*Caucho* | **12** | Back Cover<br>*Tapa Trasera* | Cast iron<br>*Fundición* | 20 | Water Deflector<br>Deflector | Rubber<br>Caucfto |
| **5** | Connection<br>*Conexión* | Cast iron<br>*Fundición* | **13** | Reinforced Seal<br>*SeUo Reforzado* | Rubber<br>*Caucho* | 21 | Release Valve<br>*Tapón Cebado* | Brass<br>*Bronce* |
| **6** | Reinforced Seal<br>*SeNo Reforzado* | Rubber<br>Caucfto | **14** | Fan Cover<br>*Tapa VentHador* | Aluminum<br>*Aluminio* | 22 | Diffuser<br>*Difusor* | Cast iron<br>*Fundición* |
| **7** | Shaft<br>*EJe* | SS304/45# Steel<br>*Inox 304/4货 Hierro* | **15** | Fan<br>*VentHador* | Plastic<br>*Plástico* | 23 | Impeller Nut<br>*Tuerca de Impulsor* | Galvanizated Steel<br>*Acero Ga/vanizado* |
| **8** | Bearing<br>Rodam^nto | Ball Bearing<br>*Bola Rodamiento* | **16** | Through Bolt<br>*Pemo* | Steel<br>*Acero* | 24 | Connection Bolt<br>*Pemo* | Steel<br>*Acero* |

## DIMENSIONS AND WEIGHT / *DIMENSIONES YPESOS*

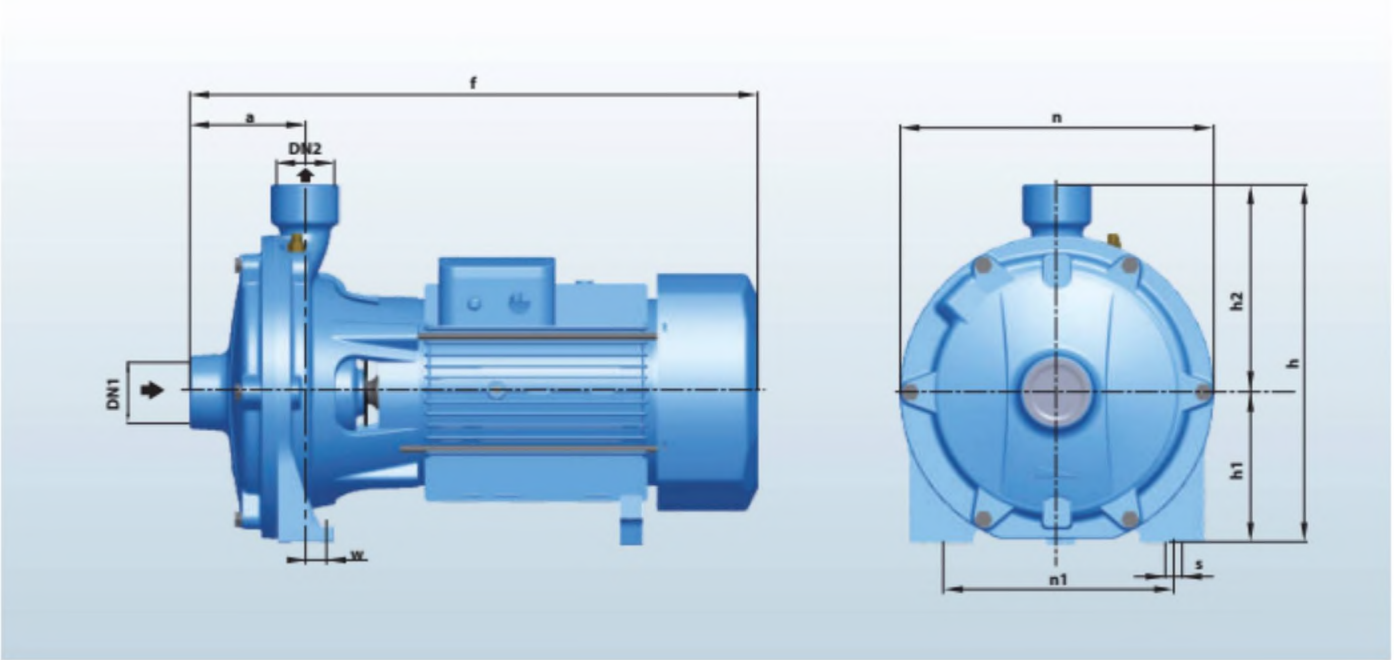

| MODEL/MODELO | | DIMENSIONS/ *DIMENSIONES* mm | | | | | | | | | | | kg | |
|---|---|---|---|---|---|---|---|---|---|---|---|---|---|---|
| Single-phase *Monofasico* | Three-phase *Trifasico* | DN1 | DN2 | a | f | h | hi | h2 | n | n! | w | s | ⊢ | 3- |
| **25-140/11** | **25-140/11** | 32 | 25 | 84 | 420 | 232 | 95 | 137 | 200 | 150 | 19 | 10 | **19.8** | **18.8** |
| **25-140/15** | **25-140/15** | 32 | 25 | 84 | 420 | 232 | 95 | 137 | 200 | 150 | 19 | 10 | **24** | **23** |
| **25-160/11** | **25-160/11** | 32 | 25 | 84 | 420 | 270 | 110 | 160 | 225 | 172 | 19 | 11 | **19.8** | **18.8** |
| **25-160/15** | **25-160/15** | 32 | 25 | 84 | 420 | 270 | 110 | 160 | 225 | 172 | 19 | 11 | **24.2** | **23.2** |
| **25-160/22** | **25-160/22** | 32 | 25 | 84 | 420 | 270 | 110 | 160 | 225 | 172 | 19 | 11 | **25.5** | **24.5** |
| **32-200/30** | **32-200/30** | 40 | 32 | 103 | 503 | 317 | 132 | 185 | 280 | 205 | 16 | 14 | **39** | **38** |
| - | **32-200/40** | 40 | 32 | 103 | 503 | 317 | 132 | 185 | 280 | 205 | 16 | 14 | • | **43** |
| - | **32-210/55** | 50 | 32 | 108 | 565 | 352 | 155 | 197 | 300 | 246 | 16 | 14 | - | **54** |
| - | **32-210/75** | 50 | 32 | 108 | 565 | 352 | 155 | 197 | 300 | 246 | 16 | 14 | - | **61** |
| - | **50-180/40-55-75** | 50 | 50 | 108 | 565 | 352 | 155 | 197 | 300 | 246 | 16 | 14 | • | **54** |
| - | **40-210/55-75** | 50 | 40 | 108 | 565 | 352 | 155 | 197 | 300 | 246 | 16 | 14 | - | **61** |
| - | **40-200/92** | 50 | 40 | 119 | 615 | 355 | 150 | 205 | 304 | 215 | 11 | 14 | - | **89** |
| - | **40-200/110** | 50 | 40 | 119 | 615 | 355 | 150 | 205 | 304 | 215 | 11 | 14 | - | **90** |
| - | **50-200/92** | 50 | 50 | 119 | 615 | 355 | 150 | 205 | 304 | 215 | 11 | 14 | - | **89** |
| - | **50-200/110** | 50 | 50 | 119 | 615 | 355 | 150 | 205 | 304 | 215 | 11 | 14 | - | **90** |
| - | **40-250/130** | 50 | 40 | 124 | 740 | 407 | 170 | 237 | 357 | 270 | 17 | 14 | - | **110** |
| - | **40-250/150** | 50 | 40 | 124 | 740 | 407 | 170 | 237 | 357 | 270 | 17 | 14 | - | **120** |
| - | **40-250/185** | 50 | 40 | 124 | 740 | 407 | 170 | 237 | 357 | 270 | 17 | 14 | - | **130** |
| - | **40-250/220** | 50 | 40 | 124 | 740 | 407 | 170 | 237 | 357 | 270 | 17 | 14 | - | **140** |
| - | **50-250/130** | 50 | 50 | 124 | 740 | 407 | 170 | 237 | 357 | 270 | 17 | 14 | - | **110** |
| • | **50-250/150** | 50 | 50 | 124 | 740 | 407 | 170 | 237 | 357 | 270 | 17 | 14 | • | **120** |
| - | **50-250/185** | 50 | 50 | 124 | 740 | 407 | 170 | 237 | 357 | 270 | 17 | 14 | - | **130** |
| - | **50-250/220** | 50 | 50 | 124 | 740 | 407 | 170 | 237 | 357 | 270 | 17 | 14 | - | **140** |

# Product Specification (60HZ)


**NEW/NUEVO**

## TECHNICAL DESCRIPTION

-New double impeller centrifugal pump
-Original design by PURITY
■ Both square motor & round motor available
-YE3 high efficient motor, with protection IP55 class F
-Pump case with anti-corrosive coating
■ Double impeller in brass
■ Shaft in stainless steel AISI 304 or galvanized iron
■ Suction and discharge port in G20 thread
• Quality NSK bearing, wear resistance mechanical seal

## USING LIMITS

■ Liquid temperature between -10°C and +120°C
■ Ambient temperature up to +50°C
■ Max. working pressure 16 bar
■ Continuous service S1

## APPLICATIONS

■ Suitable for use with clean water and liquids that are not chemically aggressive towards the materials from which the pump is made.
• The high efficiency and adaptability of these pumps to even the most unusual of applications, makes them ideal for use in the domestic, civil and industrial sectors; in particular for the distribution of water in combination with pressure sets, for pressure boosting and in fire-fighting sets.

| No. | Description<br>Descripción | Material<br>Material | Nq | Description<br>Descripción | Material<br>Material | No. | Description<br>Descripción | Material<br>Material |
|---|---|---|---|---|---|---|---|---|

| | | | | | | | | |
|---|---|---|---|---|---|---|---|---|
| 1 | Pump Case | Cast iron | 9 | Wound Stator/Rotor | Silicon Steel/Copper | 17 | Terminal Box | Aluminum |
| | Cuerpo de Bomba | Fundición | | Estator / Rotor | Acero al Silicio/Cobre | | Caja de Bornes | Aluminio |
| 2 | Impeller | Brass | 10 | Motor Case | Aluminum | 18 | Terminal Board | Plastic |
| | Impulsor | Bronce | | Cuerpo de Motor | Aluminio | | Tablero de Bornes | Plástico |
| 3 | Mechanical Seal | SiC/Carbon /SS304 | 11 | Support Foot | Plastic | 19 | Impeller Key | Iron |
| | Cierre Mecánico | SiC-Grafito-Inox304 | | Soporte Pie | Plástico | | Chaveta Impulsor | Hierro |
| 4 | O-ring | Rubber | 12 | Back Cover | Cast iron | 20 | Water Deflector | Rubber |
| | Junta Tórica | Caucho | | Tapa Trasera | Fundición | | Deflector | Caucho |
| 5 | Connection | Cast iron | 13 | Reinforced Seal | Rubber | 21 | Release Valve | Brass |
| | Conexión | Fundición | | Sello Reforzado | Caucho | | Tapón Cebado | Bronce |
| 6 | Reinforced Seal | Rubber | 14 | Fan Cover | Aluminum | 22 | Diffuser | Cast iron |
| | Sello Reforzado | Caucho | | Tapa Ventilador | Aluminio | | Difusor | Fundición |
| 7 | Shaft | SS304/45# Steel | 15 | Fan | Plastic | 23 | Impeller Nut | Galvanizated Steel |
| | Eje | Inox 304/45# Hierro | | Ventilador | Plástico | | Tuerca de Impulsor | Acero Galvanizado |
| 8 | Bearing | Ball Bearing | 16 | Through Bolt | Steel | 24 | Connection Bolt | Steel |
| | Rodamiento | Bola Rodamiento | | Pemo | Acero | | Pemo | Acero |

**DIMENSIONS AND WEIGHT / *DIMENSIONES YPESOS***

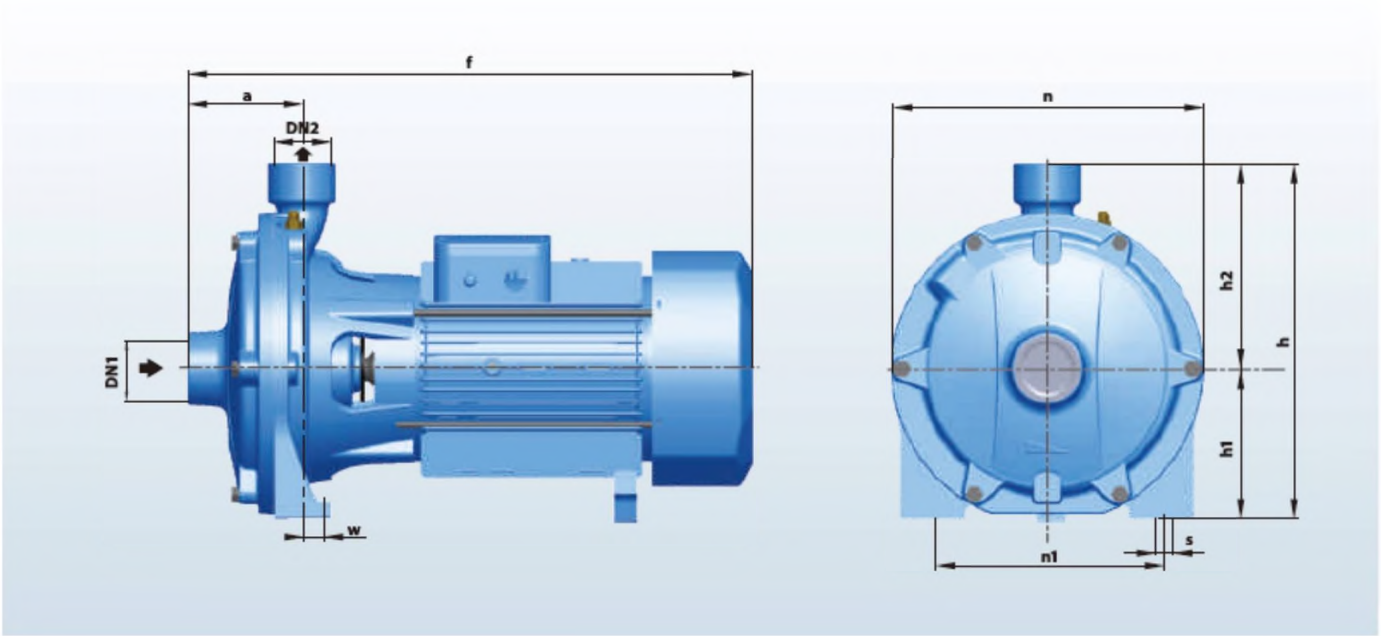

| **MODEL** / *MODELO* | | **DIMEN SION S** / *DIMENSIONES* **mm** | | | | | | | | | | | **kg** | |
|---|---|---|---|---|---|---|---|---|---|---|---|---|---|---|
| Single-phase *Monofásico* | Three-phase *Trifásico* | DN1 | DN2 | a | f | h | hi | h2 | n | n1 | w | s | ⊢ | 3~ |
| **25-140/11** | **25-140/11** | 32 | 25 | 84 | 420 | 232 | 95 | 137 | 200 | 150 | 19 | 10 | **19.8** | **18.8** |
| **25-140/15** | **25-140/15** | 32 | 25 | 84 | 420 | 232 | 95 | 137 | 200 | 150 | 19 | 10 | **24** | **23** |
| **25-160/11** | **25-160/11** | 32 | 25 | 84 | 420 | 270 | 110 | 160 | 225 | 172 | 19 | 11 | **19.8** | **18.8** |
| **25-160/15** | **25-160/15** | 32 | 25 | 84 | 420 | 270 | 110 | 160 | 225 | 172 | 19 | 11 | **24.2** | **23.2** |
| **25-160/22** | **25-160/22** | 32 | 25 | 84 | 420 | 270 | 110 | 160 | 225 | 172 | 19 | 11 | **25.5** | **24.5** |
| **32-200/30** | **32-200/30** | 40 | 32 | 103 | 503 | 317 | 132 | 185 | 280 | 205 | 16 | 14 | **39** | **38** |
| - | **32-200/40** | 40 | 32 | 103 | 503 | 317 | 132 | 185 | 280 | 205 | 16 | 14 | - | **43** |
| - | **32-210/55** | 50 | 32 | 108 | 565 | 352 | 155 | 197 | 300 | 246 | 16 | 14 | - | **54** |
| - | **32-210/75** | 50 | 32 | 108 | 565 | 352 | 155 | 197 | 300 | 246 | 16 | 14 | - | **61** |
| • | **50-180/40-55-75** | 50 | 50 | 108 | 565 | 352 | 155 | 197 | 300 | 246 | 16 | 14 | • | **54** |
| - | **40-210/55-75** | 50 | 40 | 108 | 565 | 352 | 155 | 197 | 300 | 246 | 16 | **14** | - | **C1** |
| - | **40-200/92** | 50 | 40 | 119 | 615 | 355 | 150 | 205 | 304 | 215 | 11 | **14** | - | **89** |
| - | **40-200/110** | 50 | 40 | 119 | 615 | 355 | 150 | 205 | 304 | 215 | **11** | **14** | - | **90** |
| - | **50-200/92** | 50 | 50 | 119 | 615 | 355 | 150 | 205 | 304 | 215 | 11 | **14** | - | **89** |
| - | **50-200/110** | 50 | 50 | 119 | 615 | 355 | 150 | 205 | 304 | 215 | **11** | **14** | - | **90** |
| - | **40-250/130** | 50 | 40 | 124 | 740 | 407 | 170 | 237 | 357 | 270 | 17 | **14** | - | **110** |
| - | **40-250/150** | 50 | 40 | 124 | 740 | 407 | 170 | 237 | 357 | 270 | 17 | **14** | - | **120** |
| - | **40-250/185** | 50 | 40 | 124 | 740 | 407 | 170 | 237 | 357 | 270 | 17 | **14** | - | **130** |
| - | **40-250/220** | 50 | 40 | 124 | 740 | 407 | 170 | 237 | 357 | 270 | 17 | 14 | - | **140** |
| - | **50-250/130** | 50 | 50 | 124 | 740 | 407 | 170 | 237 | 357 | 270 | 17 | **14** | - | **110** |
| - | **50-250/150** | 50 | 50 | 124 | 740 | 407 | 170 | 237 | 357 | 270 | 17 | **14** | - | **120** |
| - | **50-250/185** | 50 | 50 | 124 | 740 | 407 | 170 | 237 | 357 | 270 | 17 | **14** | - | **130** |
| - | **50-250/220** | 50 | 50 | 124 | 740 | 407 | 170 | 237 | 357 | 270 | 17 | **14** | - | **140** |

# Horizontal Water Pumps P2C

## P2C

TECHNICAL DESCRIPTION

-New double impeller centrifugal pump

-Original design by PURITY

■ Both square motor & round motor available

-YE3 high efficient motor, with protection IP55 class F

■ Pump case with anti-corrosive coating

■ Double impeller in brass

-Shaft in stainless steel AISI 304 or galvanized iron

■ Suction and discharge port in G20 thread

• Quality NSK bearing, wear resistance mechanical seal

# Product Specification (50HZ)


**NEW/NUEVO**

TECHNICAL DESCRIPTION

-New double impeller centrifugal pump

-Original design by PURITY

■ Both square motor & round motor available

-YE3 high efficient motor, with protection IP55 class F

-Pump case with anti-corrosive coating

■ Double impeller in brass

■ Shaft in stainless steel AISI 304 or galvanized iron

■ Suction and discharge port in G20 thread

• Quality NSK bearing, wear resistance mechanical seal

USING LIMITS

■ Liquid temperature between -10°C and +120°C

■ Ambient temperature up to +50°C

■ Max. working pressure 16 bar

■ Continuous service S1

APPLICATIONS

■ Suitable for use with clean water and liquids that are not chemically aggressive towards the materials from which the pump is made.

• The high efficiency and adaptability of these pumps to even the most unusual of applications, makes them ideal for use in the domestic, civil and industrial sectors; in particular for the distribution of water in combination with pressure sets, for pressure boosting and in fire-fighting sets.

## TECHNICAL DATA / *DATOS TECNICOS*

**50 Hz n=2900 1/min**

| MODEL *MODELO* | Power *Potencia* | | l/min | Q=DELIVERY/GAODAZ. | | | | | | | | | | | | | | | | | | | DN |
|---|---|---|---|---|---|---|---|---|---|---|---|---|---|---|---|---|---|---|---|---|---|---|---|
| | | | | 0 | 40 | 50 | 60 | 70 | 80 | 90 | 100 | 110 | 120 | 140 | 160 | 180 | 200 | 250 | 300 | 350 | 400 | 450 | |
| | kw | hp | m³/h | 0 | 2.4 | 3 | 3.6 | 4.2 | 4.8 | 5.4 | 6 | 6.6 | 7*2 | 8.4 | 9.6 | 10.8 | 12 | 15 | 18 | 21 | 24 | 27 | mm |
| 25-140/11 | 1.1 | 1.5 | | 54 | 47.5 | 44.5 | 41 | 37 | 33 | 28 | 22 | | | | | | | | | | | | 32x25 |
| 25-140/15 | 1.5 | 2 | | 67 | 60 | 57 | 54 | 50 | 45 | 40 | 32 | | | | | | | | | | | | 32x25 |
| 25-160/11 | 1.1 | 1.5 | | 47 | 44 | 42 | 40 | 38 | 35 | 33 | 30 | 27 | 24 | | | | | | | | | | 32x25 |
| 25-160/15 | 1.5 | 2 | | 58 | 54 | 53 | 51 | 49 | 47 | 45 | 43 | 40 | 37 | 30 | | | | | | | | | 32x25 |
| 25-160/22 | 2.2 | 3 | | 68 | 64.5 | 63 | 62 | 60 | 58 | 56 | 54 | 51 | 48 | 41 | 32 | | | | | | | | 32x25 |
| 32-200/30 | 3 | 4 | | 70 | | | | | 63 | 62 | 60.5 | 59 | 57 | 55 | 52 | 49.5 | 46.5 | 36 | | | | | 40x32 |
| 32-200/40 | 4 | 5.5 | | 85 | | | | | 77 | 76 | 75 | 74 | 72 | 69 | 66 | 62 | 58 | 49 | | | | | 40x32 |
| 32-210/55 | 5.5 | 7.5 | | 94 | | | | | 91 | 90 | 89 | 87 | 85 | 83 | 79 | 75 | 70 | 56 | | | | | 50x32 |
| 32-210/75 | 75 | 10 | | 112 | | | | | 110 | 109 | 108 | 107 | 105 | 102 | 99 | 94 | 89 | 74 | | | | | 50x32 |
| 40-210/55 | 5.5 | 7.5 | | 94 | | | | | 91 | 90 | 89 | 87 | 85 | 83 | 79 | 75 | 70 | 56 | | | | | 50x40 |
| 40-210/75 | 7.5 | 10 | | 112 | | | | | 110 | 109 | 108 | 107 | 105 | 102 | 99 | 94 | 89 | 74 | | | | | 50x40 |
| 50-180/40 | 4 | 5.5 | | 62 | | | | | 59 | 58 | 57 | 56 | 55 | 55 | 50 | 43 | 44 | 36 | 31 | 23 | | | 50x50 |
| 50-180/55 | 5.5 | 7.5 | H (m) | 72 | | | | | 69 | 68 | 67 | 66 | 65 | 65 | 60 | 58 | 54 | 46 | 41 | 33 | | | 50x50 |
| 50-180/75 | 7.5 | 10 | | 84 | | | | | 81 | 80 | 79 | 78 | 76 | 75 | 72 | 72 | 66 | 58 | 53 | 45 | | | 50x50 |
| 40-200/92 | 9.2 | 12.5 | | 97 | | | | | | | | | | 91.5 | 91 | 90 | 88 | 85 | 80 | 74 | 68 | 61 | 50x40 |
| 40-200/110 | 11 | 15 | | 105 | | | | | | | | | | 100 | 99 | 98 | 97 | 93 | 88 | 83 | 76 | 69 | 50x40 |
| 50-200/92 | 9.2 | 12.5 | | 97 | | | | | | | | | | 91.5 | 91 | 90 | 88 | 85 | 80 | 74 | 68 | 61 | 50x50 |
| 50-200/110 | 11 | 15 | | 105 | | | | | | | | | | 100 | 99 | 98 | 97 | 93 | 88 | 83 | 76 | 69 | 50x50 |
| 40-250/130 | 13 | 17.5 | | 1?0 | | | | | | | | | | 114 | 113 | 11? | 110 | 107 | 103 | 98 | 91 | 82 | 50x40 |
| 40-250/150 | 15 | 20 | | 130 | | | | | | | | | | 124 | 123 | 122 | 120 | 117 | 113 | 108 | 102 | 92 | 50x40 |
| 40-250/185 | 18.5 | 25 | | 145 | | | | | | | | | | 139 | 138 | 137 | 136 | 131 | 126 | 121 | 114 | 107 | 50x40 |
| 40-250/220 | 22 | 30 | | 160 | | | | | | | | | | 155 | 153 | 152 | 151 | 146 | 141 | 135 | 130 | 122 | 50x40 |
| 50-250/130 | 13 | 17.5 | | 120 | | | | | | | | | | 114 | 113 | 112 | 110 | 107 | 103 | 98 | 91 | 82 | 50x50 |
| 50-250/150 | 15 | 20 | | 130 | | | | | | | | | | 124 | 123 | 122 | 120 | 117 | 113 | 108 | 102 | 92 | 50x50 |
| 50-250/185 | 18.5 | 25 | | 145 | | | | | | | | | | 139 | 138 | 137 | 136 | 131 | 126 | 121 | 114 | 107 | 50x50 |
| 50-250/220 | 22 | 30 | | 160 | | | | | | | | | | 155 | 153 | 152 | 151 | 146 | 141 | 135 | 130 | 122 | 50x50 |

We reserve the technique modification right *Nos reservsmos el derecho de la modificacion tecnica*

## MATERIAL DESCRIPTION / *DESCRIPCIbN DE MATERIAL*

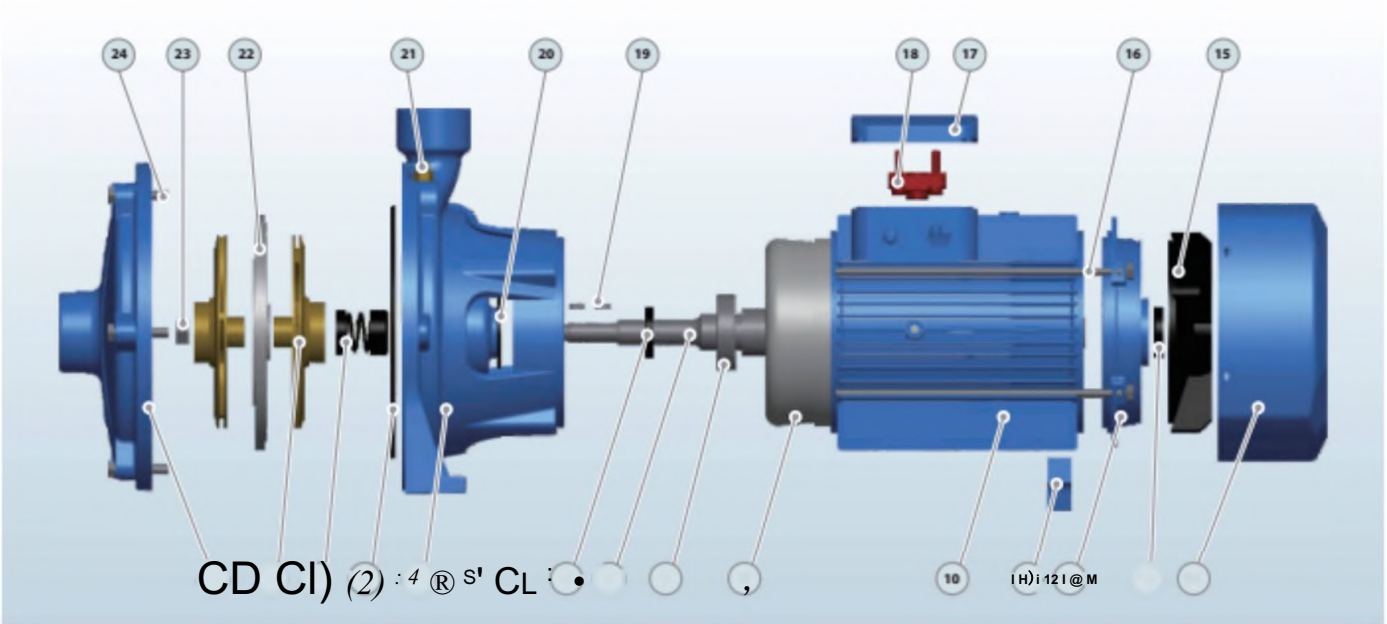

| No. | Description<br>*Descripción* | Material<br>*Material* | No. | Description<br>**Descripción** | Material<br>***Material*** | No. | Description<br>*Descripción* | Material<br>***Materia/*** |
|---|---|---|---|---|---|---|---|---|
| **1** | Pump Case<br>*Cuerpo de Bomba* | Cast iron<br>*Fundición* | **9** | Wound Stator/Rotor<br>*Estator/Rotor* | Silicon Steel/Copper<br>*Acero al SHicio/Cobre* | 17 | Terminal Box<br>*Cajs de Bomes* | Aluminum<br>*Aluminio* |
| **2** | Impeller<br>*Impulsor* | Brass<br>*Bmnce* | **10** | Motor Case<br>*Cuerpo de Motor* | Aluminum<br>*Aluminio* | 18 | *Terminal Board*<br>*Tablero de Bomes* | Plastic<br>*Plástico* |
| **3** | Mechanical Seal<br>*Cierre Mecánico* | SiC/Carbon/SS304<br>*SiC-Grafito-Inox304* | **11** | Support Foot<br>*Soporte Pie* | Plastic<br>*Plástico* | 19 | Impeller Key<br>*Chaveta Impulsor* | Iron<br>*Hierro* |
| **4** | O-ring<br>Junta *Tórics* | *Rubber*<br>*Caucho* | **12** | Back Cover<br>*Tapa Trasera* | Cast iron<br>*Fundición* | 20 | Water Deflector<br>Deflector | Rubber<br>Caucfto |
| **5** | Connection<br>*Conexión* | Cast iron<br>*Fundición* | **13** | Reinforced Seal<br>*SeUo Reforzado* | Rubber<br>*Caucho* | 21 | Release Valve<br>*Tapón Cebado* | Brass<br>*Bronce* |
| **6** | Reinforced Seal<br>*SeNo Reforzado* | Rubber<br>Caucfto | **14** | Fan Cover<br>*Tapa VentHador* | Aluminum<br>*Aluminio* | 22 | Diffuser<br>*Difusor* | Cast iron<br>*Fundición* |
| **7** | Shaft<br>*EJe* | SS304/45# Steel<br>*Inox 304/4货 Hierro* | **15** | Fan<br>*VentHador* | Plastic<br>*Plástico* | 23 | Impeller Nut<br>*Tuerca de Impulsor* | Galvanizated Steel<br>*Acero Ga/vanizado* |
| **8** | Bearing<br>Rodam^nto | Ball Bearing<br>*Bola Rodamiento* | **16** | Through Bolt<br>*Pemo* | Steel<br>*Acero* | 24 | Connection Bolt<br>*Pemo* | Steel<br>*Acero* |

## DIMENSIONS AND WEIGHT / *DIMENSIONES YPESOS*

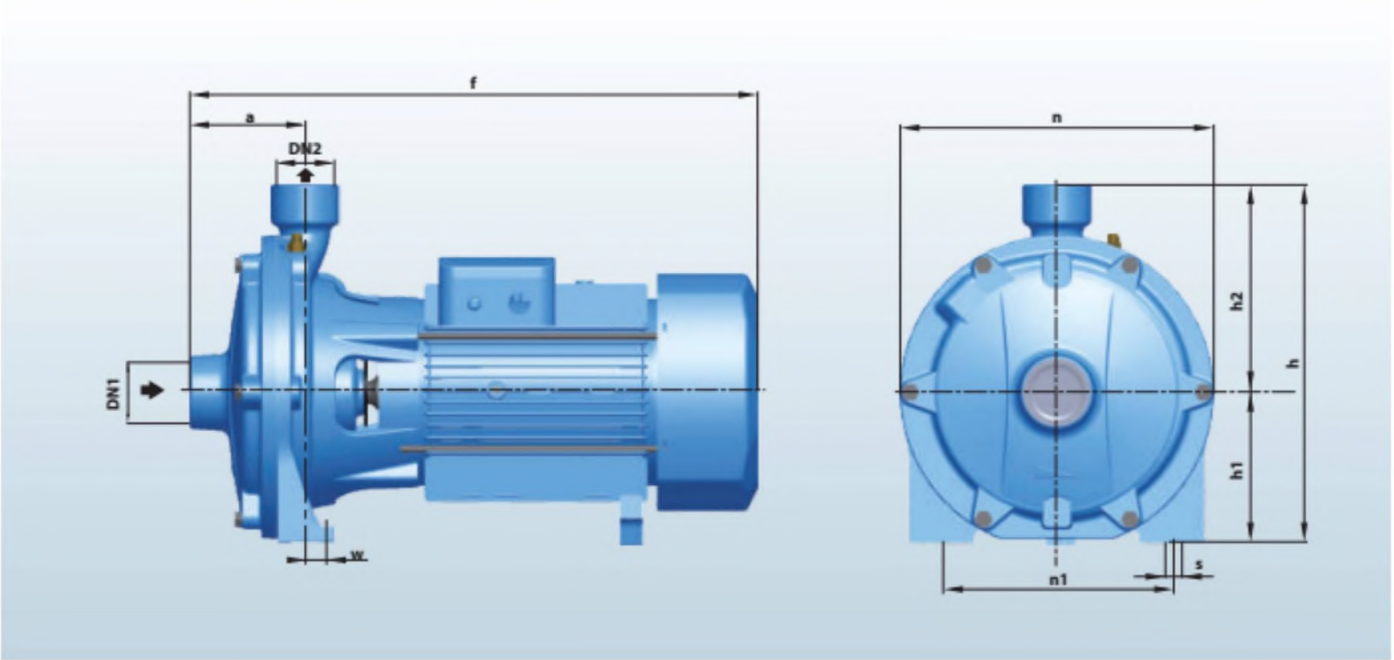

| MODEL/MODELO | | DIMENSIONS/ *DIMENSIONES* mm | | | | | | | | | | | kg | |
|---|---|---|---|---|---|---|---|---|---|---|---|---|---|---|
| Single-phase *Monofasico* | Three-phase *Trifasico* | DN1 | DN2 | a | f | h | hi | h2 | n | n! | w | s | ⊢ | 3- |
| **25-140/11** | **25-140/11** | 32 | 25 | 84 | 420 | 232 | 95 | 137 | 200 | 150 | 19 | 10 | **19.8** | **18.8** |
| **25-140/15** | **25-140/15** | 32 | 25 | 84 | 420 | 232 | 95 | 137 | 200 | 150 | 19 | 10 | **24** | **23** |
| **25-160/11** | **25-160/11** | 32 | 25 | 84 | 420 | 270 | 110 | 160 | 225 | 172 | 19 | 11 | **19.8** | **18.8** |
| **25-160/15** | **25-160/15** | 32 | 25 | 84 | 420 | 270 | 110 | 160 | 225 | 172 | 19 | 11 | **24.2** | **23.2** |
| **25-160/22** | **25-160/22** | 32 | 25 | 84 | 420 | 270 | 110 | 160 | 225 | 172 | 19 | 11 | **25.5** | **24.5** |
| **32-200/30** | **32-200/30** | 40 | 32 | 103 | 503 | 317 | 132 | 185 | 280 | 205 | 16 | 14 | **39** | **38** |
| - | **32-200/40** | 40 | 32 | 103 | 503 | 317 | 132 | 185 | 280 | 205 | 16 | 14 | • | **43** |
| - | **32-210/55** | 50 | 32 | 108 | 565 | 352 | 155 | 197 | 300 | 246 | 16 | 14 | - | **54** |
| - | **32-210/75** | 50 | 32 | 108 | 565 | 352 | 155 | 197 | 300 | 246 | 16 | 14 | - | **61** |
| - | **50-180/40-55-75** | 50 | 50 | 108 | 565 | 352 | 155 | 197 | 300 | 246 | 16 | 14 | • | **54** |
| - | **40-210/55-75** | 50 | 40 | 108 | 565 | 352 | 155 | 197 | 300 | 246 | 16 | 14 | - | **61** |
| - | **40-200/92** | 50 | 40 | 119 | 615 | 355 | 150 | 205 | 304 | 215 | 11 | 14 | - | **89** |
| - | **40-200/110** | 50 | 40 | 119 | 615 | 355 | 150 | 205 | 304 | 215 | 11 | 14 | - | **90** |
| - | **50-200/92** | 50 | 50 | 119 | 615 | 355 | 150 | 205 | 304 | 215 | 11 | 14 | - | **89** |
| - | **50-200/110** | 50 | 50 | 119 | 615 | 355 | 150 | 205 | 304 | 215 | 11 | 14 | - | **90** |
| - | **40-250/130** | 50 | 40 | 124 | 740 | 407 | 170 | 237 | 357 | 270 | 17 | 14 | - | **110** |
| - | **40-250/150** | 50 | 40 | 124 | 740 | 407 | 170 | 237 | 357 | 270 | 17 | 14 | - | **120** |
| - | **40-250/185** | 50 | 40 | 124 | 740 | 407 | 170 | 237 | 357 | 270 | 17 | 14 | - | **130** |
| - | **40-250/220** | 50 | 40 | 124 | 740 | 407 | 170 | 237 | 357 | 270 | 17 | 14 | - | **140** |
| - | **50-250/130** | 50 | 50 | 124 | 740 | 407 | 170 | 237 | 357 | 270 | 17 | 14 | - | **110** |
| • | **50-250/150** | 50 | 50 | 124 | 740 | 407 | 170 | 237 | 357 | 270 | 17 | 14 | • | **120** |
| - | **50-250/185** | 50 | 50 | 124 | 740 | 407 | 170 | 237 | 357 | 270 | 17 | 14 | - | **130** |
| - | **50-250/220** | 50 | 50 | 124 | 740 | 407 | 170 | 237 | 357 | 270 | 17 | 14 | - | **140** |

# Product Specification (60HZ)


**NEW/NUEVO**

## TECHNICAL DESCRIPTION

-New double impeller centrifugal pump
-Original design by PURITY
■ Both square motor & round motor available
-YE3 high efficient motor, with protection IP55 class F
-Pump case with anti-corrosive coating
■ Double impeller in brass
■ Shaft in stainless steel AISI 304 or galvanized iron
■ Suction and discharge port in G20 thread
• Quality NSK bearing, wear resistance mechanical seal

## USING LIMITS

■ Liquid temperature between -10°C and +120°C
■ Ambient temperature up to +50°C
■ Max. working pressure 16 bar
■ Continuous service S1

## APPLICATIONS

■ Suitable for use with clean water and liquids that are not chemically aggressive towards the materials from which the pump is made.
• The high efficiency and adaptability of these pumps to even the most unusual of applications, makes them ideal for use in the domestic, civil and industrial sectors; in particular for the distribution of water in combination with pressure sets, for pressure boosting and in fire-fighting sets.

| No. | Description<br>Descripción | Material<br>Material | Nq | Description<br>Descripción | Material<br>Material | No. | Description<br>Descripción | Material<br>Material |
|---|---|---|---|---|---|---|---|---|

| | | | | | | | | |
|---|---|---|---|---|---|---|---|---|
| 1 | Pump Case | Cast iron | 9 | Wound Stator/Rotor | Silicon Steel/Copper | 17 | Terminal Box | Aluminum |
| | Cuerpo de Bomba | Fundición | | Estator / Rotor | Acero al Silicio/Cobre | | Caja de Bornes | Aluminio |
| 2 | Impeller | Brass | 10 | Motor Case | Aluminum | 18 | Terminal Board | Plastic |
| | Impulsor | Bronce | | Cuerpo de Motor | Aluminio | | Tablero de Bornes | Plástico |
| 3 | Mechanical Seal | SiC/Carbon /SS304 | 11 | Support Foot | Plastic | 19 | Impeller Key | Iron |
| | Cierre Mecánico | SiC-Grafito-Inox304 | | Soporte Pie | Plástico | | Chaveta Impulsor | Hierro |
| 4 | O-ring | Rubber | 12 | Back Cover | Cast iron | 20 | Water Deflector | Rubber |
| | Junta Tórica | Caucho | | Tapa Trasera | Fundición | | Deflector | Caucho |
| 5 | Connection | Cast iron | 13 | Reinforced Seal | Rubber | 21 | Release Valve | Brass |
| | Conexión | Fundición | | Sello Reforzado | Caucho | | Tapón Cebado | Bronce |
| 6 | Reinforced Seal | Rubber | 14 | Fan Cover | Aluminum | 22 | Diffuser | Cast iron |
| | Sello Reforzado | Caucho | | Tapa Ventilador | Aluminio | | Difusor | Fundición |
| 7 | Shaft | SS304/45# Steel | 15 | Fan | Plastic | 23 | Impeller Nut | Galvanizated Steel |
| | Eje | Inox 304/45# Hierro | | Ventilador | Plástico | | Tuerca de Impulsor | Acero Galvanizado |
| 8 | Bearing | Ball Bearing | 16 | Through Bolt | Steel | 24 | Connection Bolt | Steel |
| | Rodamiento | Bola Rodamiento | | Pemo | Acero | | Pemo | Acero |

**DIMENSIONS AND WEIGHT / *DIMENSIONES YPESOS***

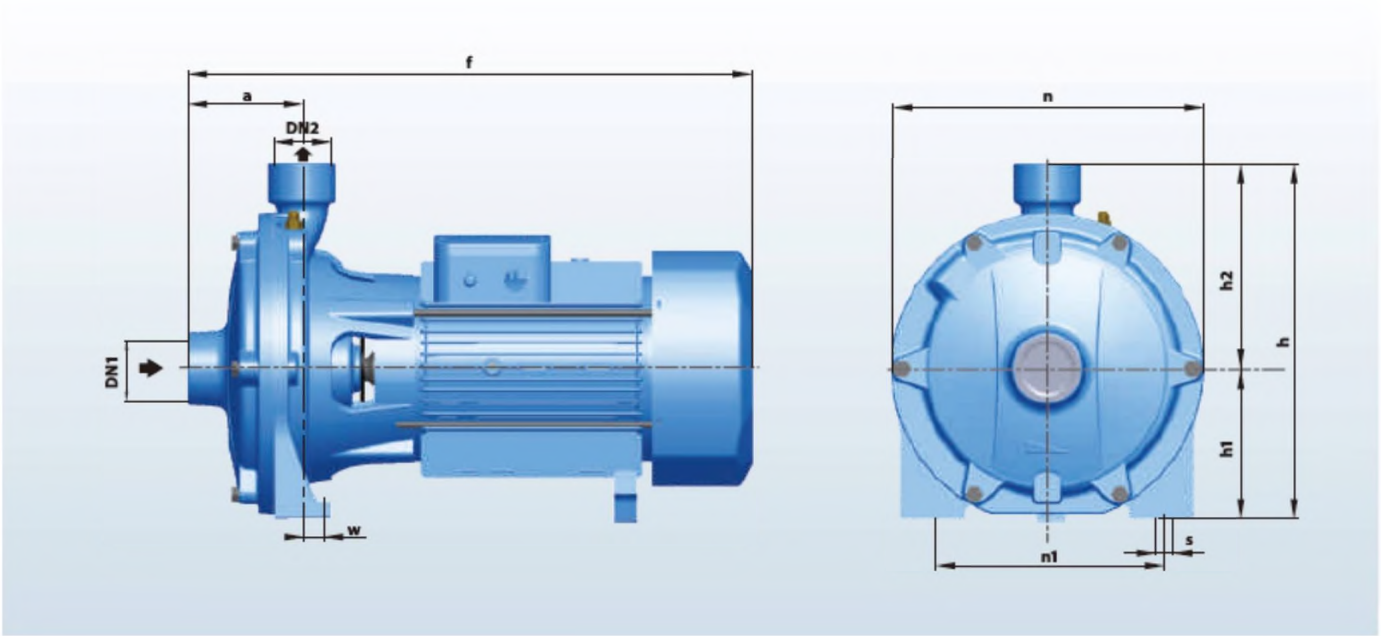

| **MODEL** / *MODELO* | | **DIMEN SION S** / *DIMENSIONES* **mm** | | | | | | | | | | | **kg** | |
|---|---|---|---|---|---|---|---|---|---|---|---|---|---|---|
| Single-phase *Monofásico* | Three-phase *Trifásico* | DN1 | DN2 | a | f | h | hi | h2 | n | n1 | w | s | ⊢ | 3~ |
| **25-140/11** | **25-140/11** | 32 | 25 | 84 | 420 | 232 | 95 | 137 | 200 | 150 | 19 | 10 | **19.8** | **18.8** |
| **25-140/15** | **25-140/15** | 32 | 25 | 84 | 420 | 232 | 95 | 137 | 200 | 150 | 19 | 10 | **24** | **23** |
| **25-160/11** | **25-160/11** | 32 | 25 | 84 | 420 | 270 | 110 | 160 | 225 | 172 | 19 | 11 | **19.8** | **18.8** |
| **25-160/15** | **25-160/15** | 32 | 25 | 84 | 420 | 270 | 110 | 160 | 225 | 172 | 19 | 11 | **24.2** | **23.2** |
| **25-160/22** | **25-160/22** | 32 | 25 | 84 | 420 | 270 | 110 | 160 | 225 | 172 | 19 | 11 | **25.5** | **24.5** |
| **32-200/30** | **32-200/30** | 40 | 32 | 103 | 503 | 317 | 132 | 185 | 280 | 205 | 16 | 14 | **39** | **38** |
| - | **32-200/40** | 40 | 32 | 103 | 503 | 317 | 132 | 185 | 280 | 205 | 16 | 14 | - | **43** |
| - | **32-210/55** | 50 | 32 | 108 | 565 | 352 | 155 | 197 | 300 | 246 | 16 | 14 | - | **54** |
| - | **32-210/75** | 50 | 32 | 108 | 565 | 352 | 155 | 197 | 300 | 246 | 16 | 14 | - | **61** |
| • | **50-180/40-55-75** | 50 | 50 | 108 | 565 | 352 | 155 | 197 | 300 | 246 | 16 | 14 | • | **54** |
| - | **40-210/55-75** | 50 | 40 | 108 | 565 | 352 | 155 | 197 | 300 | 246 | 16 | **14** | - | **C1** |
| - | **40-200/92** | 50 | 40 | 119 | 615 | 355 | 150 | 205 | 304 | 215 | 11 | **14** | - | **89** |
| - | **40-200/110** | 50 | 40 | 119 | 615 | 355 | 150 | 205 | 304 | 215 | **11** | **14** | - | **90** |
| - | **50-200/92** | 50 | 50 | 119 | 615 | 355 | 150 | 205 | 304 | 215 | 11 | **14** | - | **89** |
| - | **50-200/110** | 50 | 50 | 119 | 615 | 355 | 150 | 205 | 304 | 215 | **11** | **14** | - | **90** |
| - | **40-250/130** | 50 | 40 | 124 | 740 | 407 | 170 | 237 | 357 | 270 | 17 | **14** | - | **110** |
| - | **40-250/150** | 50 | 40 | 124 | 740 | 407 | 170 | 237 | 357 | 270 | 17 | **14** | - | **120** |
| - | **40-250/185** | 50 | 40 | 124 | 740 | 407 | 170 | 237 | 357 | 270 | 17 | **14** | - | **130** |
| - | **40-250/220** | 50 | 40 | 124 | 740 | 407 | 170 | 237 | 357 | 270 | 17 | 14 | - | **140** |
| - | **50-250/130** | 50 | 50 | 124 | 740 | 407 | 170 | 237 | 357 | 270 | 17 | **14** | - | **110** |
| - | **50-250/150** | 50 | 50 | 124 | 740 | 407 | 170 | 237 | 357 | 270 | 17 | **14** | - | **120** |
| - | **50-250/185** | 50 | 50 | 124 | 740 | 407 | 170 | 237 | 357 | 270 | 17 | **14** | - | **130** |
| - | **50-250/220** | 50 | 50 | 124 | 740 | 407 | 170 | 237 | 357 | 270 | 17 | **14** | - | **140** |

# Horizontal Water Pumps PGW

## PGW

### TECHNICAL DESCRIPTION

-New centrifugal pump

- Original design by PURITY (patented)
- YE3 high efficient motor, with protection IP55 class F
- Pump case with anti-corrosive coating
- Impeller in stainless steel AISI 304 or cast iron
- Shaft in stainless steel AISI 304 or galvanized iron

-Quality bearing, wear resistance mechanical seal

# Product Specification (50HZ)

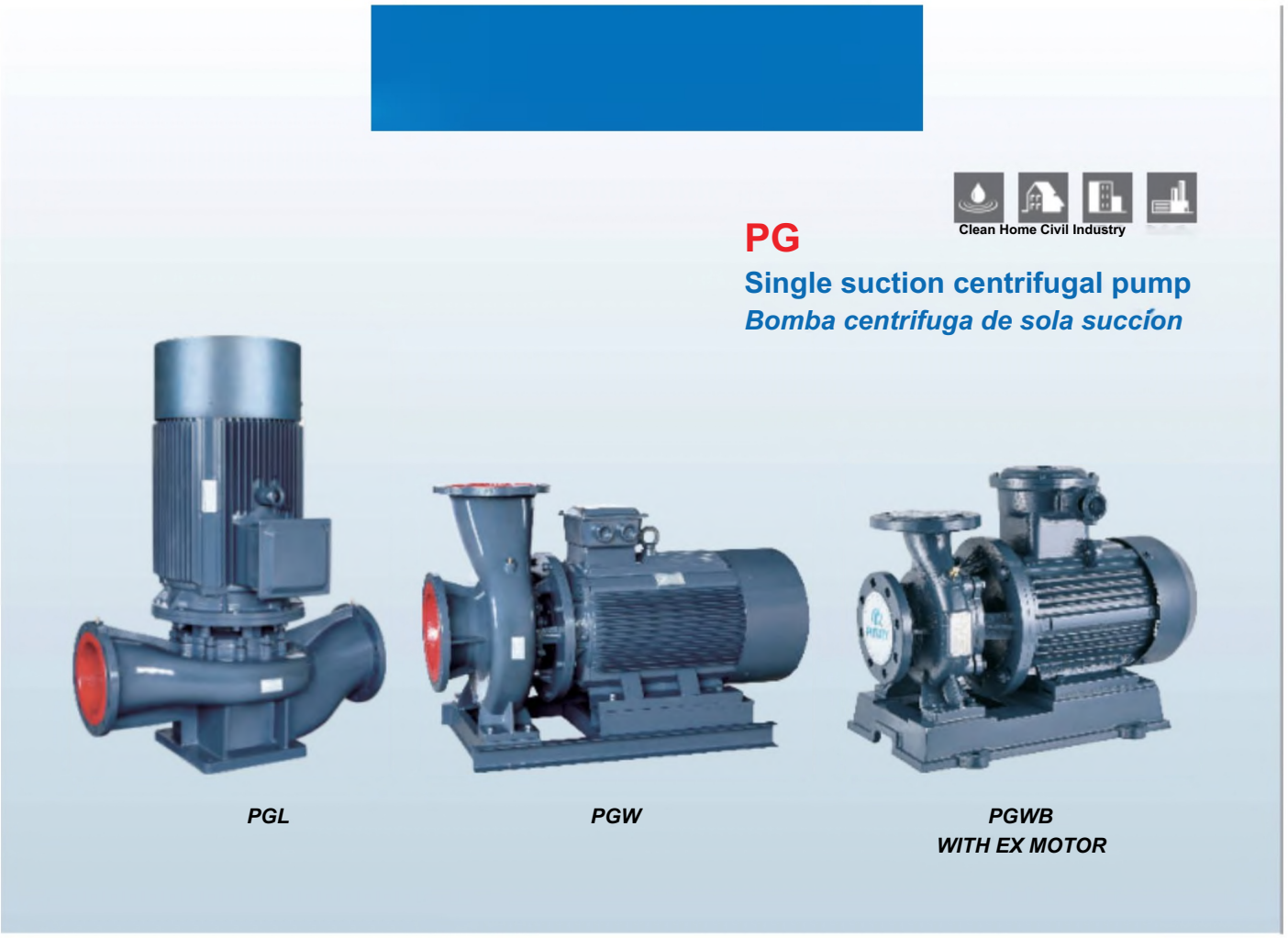


**NEW/NUEVO**

## TECHNICAL DESCRIPTION

■ New centrifugal pump
• Original design by PURITY (patented)
-YE3 high efficient motor, with protection IP55 class F
■ Pump case with anti-corrosive coating
■Impeller in stainless steel AISI 304 or cast iron
■ Shaft in stainless steel AISI 304 or galvanized iron
• Quality bearing, wear resistance mechanical seal

## USING LIMITS

-Liquid temperature between -10°C and +120°C
■ Ambient temperature up to +50°C
■ Max. working pressure 16 bar
■ Continuous service S1

## APPLICATIONS

■ Suitable for use with clean water and liquids that are not chemically aggressive towards the materials from which the pump is made. The centrifugal pumps are recommended for use in water supply, cleaning sets, pressure boosting, firefighting sets, irrigation, industrial applications, water circulation in climatisation sets, agricultural.

## TECHNICAL DATA / *DATOS T^CNICOS*

**50 Hz n=29001/min**

| MODEL *MODELO* | Power *Potencia* | | Flow *Caudal* | Head *Altura* | DN | Wt | Dim |
|---|---|---|---|---|---|---|---|
| | fcw | hp | m³/h | m | mm | kg | cm |
| 25-125 | 0.75 | 1 | 4 | 20 | 25x25 | 28 | 26x23x43 |
| 25-125A | 0.75 | 1 | 3.6 | 16 | 25x25 | 27 | 26x23x43 |
| 25-160 | 1.5 | 2 | 4 | 32 | 25x25 | 39 | 30x27x43 |
| 25-160A | 1.1 | 1.5 | 3.7 | 28 | 25x25 | 34 | 30x27x43 |
| 32-125 | 0.75 | 1 | 5 | 20 | 32x32 | 28 | 26x23x44 |
| 32-125A | 0.75 | 1 | 4.5 | 16 | 32x32 | 28 | 26x23x44 |
| 32-160 | 1.5 | 2 | 4.5 | 32 | 32x32 | 39 | 32x27x50 |
| 32-160A | 1.1 | 1.5 | 4 | 28 | 32x32 | 38 | 32x27x41 |
| 32-200 | 3 | 4 | 4.5 | 50 | 32x32 | 55 | 34x33x54 |
| 32-200A | 2.2 | 3 | 4 | 44 | 32x32 | 74 | 34x33x54 |
| 40-100 | 0.75 | 1 | 6.3 | 12.5 | 40x40 | 32 | 26x23x44 |
| 40-125 | 1.1 | 1.5 | 63 | 20 | 40x40 | 34 | 26x23x44 |
| 40-125A | 075 | 1 | 5.6 | 16 | 40x40 | 33 | 28x23x44 |
| 40-160 | 2.2 | 3 | 6.3 | 32 | 40x40 | 47 | 32x27x50 |
| 40-160A | 1.5 | 2 | 5.9 | 28 | 40x40 | 43 | 32x27x50 |
| 40-160B | 1.1 | 1.5 | 5.5 | 24 | 40x40 | 38 | 32x27x50 |
| 40-200 | 4 | 5.5 | 6.3 | 50 | 40x40 | 74 | 34x33x56 |
| 40-200A | 3 | 4 | 5.9 | 44 | 40x40 | 62 | 34x33x56 |
| 40-200B | 2.2 | 3 | 3.7 | 38 | 40x40 | 52 | 34x33x56 |
| 40-250 | 7.5 | 10 | 6.3 | 80 | 40x40 | 105 | 40x40x63 |
| 40-2S0A | 5.5 | 7.5 | 5.9 | 70 | 40x40 | 98 | 40x40x63 |
| 40-250B | 4 | 5.5 | 5.5 | 60 | 40x40 | 77 | 40x40x56 |
| 40-100(1) | 1.1 | 1.5 | 12.5 | 12.5 | 40x40 | 34 | 30x23x45 |
| 40-100(1) A | 0.75 | 1 | 11 | 10 | 40x40 | 32 | 30x23x45 |
| 40-125(1) | 1.5 | 2 | 12.5 | 20 | 40x40 | 38 | 30x24x46 |
| 40-125(I)A | 1.1 | 1.5 | 11 | 16 | 40x40 | 33 | 30x24x45 |
| 40-160(1) | 3 | 4 | 12.5 | 32 | 40x40 | 56 | 34x30x55 |
| 40-160(1) A | 2.2 | 3 | 11.7 | 28 | 40x40 | 47 | 34x30x51 |
| 40-200(1) | 5.5 | 7.5 | 12.5 | 50 | 40x40 | 85 | 36x35x63 |
| 40-200(I)A | 4 | 5.5 | 11.7 | 44 | 40x40 | 75 | 36x35x57 |
| 40-200(I)B | 3 | 4 | 10.6 | 36 | 40x40 | 63 | 36x35x55 |
| 40-250(1) | 11 | 15 | 12.5 | 80 | 40x40 | 145 | 45x43x78 |
| 40-250(I)A | 7.5 | 10 | 11.6 | 70 | 40x40 | 95 | 45x36x65 |
| 40-250(I)B | 7.5 | 10 | 10.8 | 60 | 40x40 | 94 | 45x36x65 |
| 50-100 | 1.1 | 1.5 | 12.5 | 12.5 | 50x50 | 36 | 29x23x45 |
| 50-100A | 0.75 | 1 | 11 | 10 | 50x50 | 35 | 29x23x45 |
| 50-125 | 1.5 | 2 | 12.5 | 20 | 50x50 | 43 | 30x24x46 |
| 50-125A | 1.1 | 1.5 | 11 | 16 | 50x50 | 38 | 30x24x45 |
| 50-160 | 3 | 4 | 12.5 | 32 | 50x50 | 59 | 32x30x55 |
| 50-160A | 2.2 | 3 | 11.7 | 28 | 50x50 | 51 | 32x30x51 |
| 50-160B | 1.5 | 2 | 10.4 | 22 | 50x50 | 47 | 32x40x49 |
| 50-200 | 5.5 | 7.5 | 12.5 | 50 | 50x50 | 101 | 36x35x63 |
| 50-200A | 4 | 5.S | 11.7 | 44 | 50x50 | 80 | 36x35x57 |
| 50-200B | 3 | 4 | 10.6 | 36 | 50x50 | 68 | 36x35x55 |
| 50-250 | 11 | 15 | 12.5 | 80 | 50x50 | 160 | 44x43x78 |
| 50-250A | 7.5 | 10 | 11.6 | 70 | 50x50 | 115 | 44x43x65 |
| 50-250B | 7.5 | 10 | 10.8 | 60 | 50x50 | 114 | 44x36x65 |
| 50*100(1) | 1.5 | 2 | 25 | 12.5 | 50x50 | 41 | 32x23x48 |
| 50-100(1) A | 1.1 | 1.5 | 22.3 | 10 | 50x50 | 36 | 32x23x46 |
| 50-125(1) | 3 | 4 | 25 | 20 | 50x50 | 56 | 34x28x55 |
| 50-125(DA | 2.2 | 3 | 22.3 | 16 | 50x50 | 48 | 34x28x52 |

| MODEL *MODELO* | Power *Potencia* | | Flow *Caudal* | Head *Altura* | DN | Wt | Dim |
|---|---|---|---|---|---|---|---|
| | kw | hp | m³/h | m | mm | kg | cm |
| 50-160(1) | 4 | 5.5 | 25 | 32 | 50x50 | 72 | 36x30x57 |
| 50-160(I)A | 4 | 5.5 | 23.4 | 28 | 50x50 | 71 | 36x30x57 |
| 50-160(I)B | 3 | 4 | 21.6 | 24 | 50x50 | 59 | 36x30x55 |
| 50-200(1) | 7.5 | 10 | 25 | 50 | 50x50 | 108 | 38x35x64 |
| 50-200(I)A | 7.5 | 10 | 23.5 | 44 | 50x50 | 107 | 38x35x64 |
| 50.200(I)B | 5.5 | 7.5 | 21.8 | 38 | 50x50 | 100 | 38x35x64 |
| 50-250(1) | 1.5 | 2 | 25 | 80 | 50x50 | 175 | 46x44x79 |
| 50-250(I)A | 11 | 15 | 23.4 | 70 | 50x50 | 165 | 46x44x79 |
| 50-250(I)B | 11 | 15 | 21.6 | 60 | 50x50 | 165 | 46x44x79 |
| 50-315(1) | 30 | 40 | 2S | 125 | 50x50 | 310 | 55x51x92 |
| 50-315(I)A | 22 | 30 | 23.7 | 113 | 50x50 | 245 | 55x47x86 |
| 50-315(I)B | 18.5 | 25 | 22.5 | 101 | 50x50 | 215 | 55x44x83 |
| 65-100 | 1.5 | 2 | 25 | 12.5 | 65x65 | 46 | 32x23x47 |
| 65-100A | 1.1 | 1.5 | 22.3 | 10 | 65x65 | 41 | 32x23x46 |
| 65-125 | 3 | 4 | 25 | 20 | 65x65 | 58 | 34x28x55 |
| 65-125A | 2.2 | 3 | 22.3 | 16 | 65x6S | 49 | 34x28x52 |
| 65-160 | 4 | 5.5 | 25 | 32 | 65x65 | 75 | 36x31x57 |
| 65-160A | 4 | 5.5 | 23.4 | 28 | 65x65 | 75 | 36x31x57 |
| 65-160B | 3 | 4 | 21.6 | 24 | 65x65 | 63 | 36x31x55 |
| 65-200 | 7.5 | 10 | 25 | 50 | 65x65 | 107 | 38x35x63 |
| 65-200A | 7.5 | 10 | 23.5 | 44 | 65x65 | 107 | 38x35x63 |
| 65-200B | 5.5 | 7.5 | 21.8 | 38 | 65x65 | 100 | 38x35x63 |
| 65-250 | 15 | 20 | 25 | 80 | 65x65 | 180 | 48x44x79 |
| 65-250A | 11 | 15 | 23.4 | 70 | 65x65 | 170 | 48x44x79 |
| 65-250B | 11 | 15 | 21.6 | 60 | 65x65 | 170 | 48x44x79 |
| 65-315 | 30 | 40 | 25 | 125 | 65x65 | 320 | 55x51x92 |
| 65-315A | 22 | 30 | 23.7 | 113 | 65x65 | 255 | 55x47x86 |
| 65-315B | 18.5 | 25 | 22.5 | 101 | 65x65 | 225 | 55x44x83 |
| 65-100(1) | 3 | 4 | 50 | 125 | 65x65 | 63 | 40x28x57 |
| 65-100(QA | 2.2 | 3 | 44.7 | 10 | 65x65 | 53 | 40x24x54 |
| 65-125(1) | 5.5 | 7.5 | 50 | 20 | 65x65 | 99 | 40x36x66 |
| 65-125(I)A | 4 | 5.5 | 45 | 16 | 65x65 | 78 | 40x32x60 |
| 65-160(1) | 7.5 | 10 | 50 | 32 | 65x65 | 103 | 40x36x66 |
| 65<160(I)A | 7.5 | 10 | 46.7 | 28 | 65x65 | 103 | 40x36x66 |
| 65-160(I)B | 5.5 | 7.5 | 43.4 | 24 | 65x65 | 97 | 40x32x66 |
| 65-200(1) | 15 | 20 | 50 | 50 | 65x65 | 176 | 45x43x80 |
| 65-200(I)A | 11 | 15 | 47 | 44 | 65x65 | 166 | 45x43x80 |
| 65-200(DB | 7.5 | 10 | 43.3 | 38 | 65x65 | 114 | 45x43x67 |
| 65-250(1) | 22 | 30 | 50 | 80 | 65x65 | 235 | 48x47x87 |
| 65-250(I)A | 18.5 | 25 | 46.7 | 70 | 65x65 | 205 | 48x43x85 |
| 65-250(I)B | 15 | 20 | 43.3 | 60 | 65x65 | 180 | 48x43x81 |
| 65-315(1) | 37 | 50 | 50 | 125 | 65x65 | 350 | 58x53x100 |
| 65-315(I)A | 30 | 40 | 46.5 | 110 | 65x65 | 335 | 58x53x100 |
| 80-100 | 3 | 4 | 50 | 125 | 80x80 | 63 | 40x28x57 |
| 80-100A | 2.2 | 3 | 44.7 | 10 | 80x80 | 54 | 40x24x54 |
| 80-125 | 5.5 | 7.5 | 50 | 20 | 80x80 | 99 | 40x36x66 |
| 80-125A | 4 | 5.5 | 45 | 16 | 80x80 | 79 | 40x32x60 |
| 80-160 | 7.5 | 10 | 50 | 32 | 80x80 | 105 | 40x36x66 |
| 80-160A | 7.5 | 10 | 46.7 | 28 | 80x80 | 105 | 40x36x66 |
| 80-160B | 5.5 | 7.5 | 43.4 | 24 | 80x80 | 98 | 40x36x66 |
| 80-200 | 15 | 20 | 50 | 50 | 80x80 | 175 | 43x43x80 |

## TECHNICAL DATA / *DATOS TiCNICOS*

**50 Hz n=2900 1/min**

| MODEL *MODELO* | Power *Potencia* | | Flow *Caudal* | Head *Altura* | DN | Wt | Dim |
|---|---|---|---|---|---|---|---|
| | kw | hp | $m^3/h$ | m | mm | kg | cm |
| 80-200A | 11 | 15 | 47 | 44 | 80x80 | 165 | 43x43x80 |
| 80-200B | 7.S | 10 | 43.3 | 38 | 80x80 | 115 | 43x36x66 |
| 80-250 | 22 | 30 | 50 | 80 | 80x80 | 240 | 48x47x87 |
| 80-250A | 18.5 | 25 | 46.7 | 70 | 80x80 | 210 | 48x43x85 |
| 80-250B | 15 | 20 | 43.3 | 60 | 80x80 | 185 | 48x43x81 |
| 80-315 | 37 | 50 | 50 | 125 | 80x80 | 355 | 58x53x100 |
| 80-315A | 30 | 40 | 46.5 | 110 | 80x80 | 340 | 58x53x100 |
| 80-315B | 30 | 40 | 44.5 | 100 | 80x80 | 340 | 58x53x100 |
| 80-315C | 22 | 30 | 41 | 85 | 80x80 | 275 | 58x47x89 |
| 80-350 | 55 | 75 | 50 | 150 | 80x80 | 535 | 64x64x117 |
| 80-350A | 45 | 60 | 44.5 | 142 | 80x80 | 420 | 64x58x108 |
| 80-350B | 37 | 50 | 41 | 135 | 80x80 | 366 | 64x52x104 |
| 80-100(1) | 5.5 | 7.5 | 100 | 12.5 | 80x80 | 108 | 46x36x68 |
| 80-100(I)A | 4 | 5.5 | 89 | 10 | 80x80 | 87 | 46x36x62 |
| 80-125(1) | 11 | 15 | 100 | 20 | 80x80 | 163 | 45x43x81 |
| 80-125(I)A | 7.5 | 10 | 89 | 16 | 80x80 | 113 | 45x35x67 |
| 80-160(0 | 15 | 20 | 100 | 32 | 80x80 | 184 | 50x43x84 |
| 80-160(I)A | 11 | 15 | 93.5 | 28 | 80x80 | 174 | 50x43x84 |
| 80-160(I)B | 11 | 15 | 86.6 | 24 | 80x80 | 174 | 50x43x84 |
| 80-200(1) | 22 | 30 | 100 | 50 | 80x80 | 251 | 48x48x88 |
| 80-200(I)A | 18.5 | 25 | 93.5 | 44 | 80x80 | 220 | 48x43x86 |
| 80-200(I)B | 15 | 20 | 87 | 38 | 80x80 | 198 | 48x43x81 |
| 80-250(1) | 37 | 50 | 100 | 80 | 80x80 | 330 | 55x52x102 |
| 80-250(I)A | 30 | 40 | 93.5 | 70 | 80x80 | 315 | 55x52x102 |
| 80-250(1)8 | 30 | 40 | 87 | 60 | 80x80 | 315 | 55x52x102 |
| 80-315(1) | 75 | 100 | 100 | 125 | 80x80 | 675 | 64x70x124 |
| 80-315(I)A | 55 | 75 | 95 | 113 | 80x80 | 535 | 64x64x117 |
| 80-315(I)B | 45 | 60 | 90 | 101 | 80x80 | 420 | 64x58x108 |
| 80-315(I)C | 37 | 50 | 82 | 85 | 80x80 | 366 | 64x52x104 |
| 100-100 | 5.5 | 7.5 | 100 | 12.5 | 100x100 | 113 | 46x36x67 |
| 100-100A | 4 | 5.5 | 89 | 10 | 100x100 | 91 | 46x32x62 |
| 100-125 | 11 | 15 | 100 | 20 | 100x100 | 169 | 44x43x81 |
| 100-125A | 7.5 | 10 | 89 | 16 | 100x100 | 118 | 45x35x67 |
| 100-160 | 15 | 20 | 100 | 32 | 100x100 | 191 | 50x43x84 |
| 100-160A | 11 | 15 | 93.5 | 28 | 100x100 | 181 | 50x43x84 |
| 100-160B | 11 | 15 | 86.6 | 24 | 100x100 | 181 | 50x43x84 |
| 100-200 | 22 | 30 | 100 | 50 | 100x100 | 245 | 48x48x88 |
| 100-200A | 18.5 | 25 | 93.5 | 44 | 100x100 | 215 | 48x43x86 |
| 100-200B | 15 | 20 | 87 | 38 | 100x100 | 193 | 48x43x82 |
| 100-250 | 37 | 50 | 100 | 80 | 100x100 | 345 | 55x52x102 |
| 100-250A | 30 | 40 | 93.5 | 70 | 100x100 | 330 | 55x52x102 |
| 100-250B | 30 | 40 | 87 | 60 | 100x100 | 330 | 55x52x102 |
| 100-315 | 75 | 100 | 100 | 125 | 100x100 | 689 | 64x70x124 |
| 100-315A | 55 | 75 | 95 | 113 | 100x100 | 549 | 64x64x117 |
| 100-315B | 45 | 60 | 90 | 101 | 100x100 | 439 | 64x58x108 |
| 100-350 | 90 | 120 | 100 | 150 | 100x100 | 950 | 68x63x131 |
| 1OO-35OA | 75 | 100 | 88 | 142 | 100x100 | 830 | 68x63x126 |
| 100-350B | 55 | 75 | 80 | 135 | 100x100 | 600 | 68x61x119 |
| 100-100(1) | 11 | 15 | 160 | 12.5 | 100x100 | 115 | 50x42x80 |
| 100-125(1) | 15 | 20 | 160 | 20 | 100x100 | 168 | 50x30x81 |
| 100-125(I)A | 11 | 15 | 140 | 17 | 100x100 | 168 | 50x28x81 |

| MODEL *MODELO* | Power *Potencia* | | Flow *Caudal* | Head *Altura* | DN | Wt | Dim |
|---|---|---|---|---|---|---|---|
| | kw | hp | $m^3/h$ | m | mm | kg | cm |
| 100-160(1) | 22 | 30 | 160 | 32 | 100x100 | 210 | 50x33x89 |
| 100-160(I)A | 18.5 | 25 | 140 | 28 | 100x100 | 210 | 50x33x89 |
| 100-200(1) | 37 | 50 | 160 | 50 | 100x100 | 402 | 54x36x97 |
| 100-200(I)A | 30 | 40 | 140 | 45 | 100x100 | 395 | 54x35x97 |
| 100-200(I)B | 22 | 30 | 100 | 40 | 100x100 | 360 | 54x35x97 |
| 100-250(1) | 55 | 75 | 160 | 80 | 100x100 | 560 | 60x44x112 |
| 100-250(DA | 45 | 60 | 140 | 72 | 100x100 | 420 | 60x36x112 |
| 1OO*25O(I)B | 37 | 50 | 100 | 65 | 100x100 | 400 | 60x36x112 |
| 125-100 | 11 | 15 | 160 | 12.5 | 125x125 | 180 | 52x43x83 |
| 125-100A | 7.5 | 10 | 143 | 10 | 125x125 | 125 | 52x36x83 |
| 125-125 | 15 | 20 | 160 | 20 | 125x125 | 220 | 52x43x84 |
| 125-125A | 11 | 15 | 143 | 16 | 125x125 | 210 | 52x43x84 |
| 125-160 | 22 | 30 | 160 | 32 | 125x125 | 265 | 52x46x92 |
| 125-160A | 18.5 | 25 | 150 | 28 | 125x125 | 230 | 52x43x89 |
| 12S-160B | 15 | 20 | 138 | 24 | 125x125 | 215 | 52x43x85 |
| 125-200 | 37 | 50 | 160 | 50 | 125x125 | 395 | 57x51x104 |
| 125-200A | 30 | 40 | 150 | 44 | 125x125 | 380 | 57x51x104 |
| 125-2OOB | 22 | 30 | 138 | 37.5 | 125x125 | 320 | 57x46x104 |
| 125-250 | 55 | 75 | 160 | 80 | 125x125 | 580 | 68x66x118 |
| 125-250A | 45 | 60 | 150 | 70 | 125x125 | 490 | 68x57x108 |
| 125-250B | 37 | 50 | 138 | 60 | 125x125 | 430 | 68x51x105 |
| 125-315 | 90 | 120 | 160 | 125 | 125x125 | 790 | 68x69x135 |
| 125-315A | 75 | 100 | 150 | 110 | 125x125 | 710 | 68x69x130 |
| 125-315B | 75 | 100 | 143 | 100 | 125x125 | 705 | 68x69x135 |
| 125-315C | 55 | 75 | 134 | 88 | 125x125 | 585 | 68x66x123 |
| 125-350 | 110 | 150 | 160 | 150 | 125x125 | 980 | 76x90x156 |
| 125-350A | 90 | 120 | 150 | 142 | 125x125 | 800 | 76x70x133 |
| 125-350B | 75 | 100 | 143 | 135 | 125x125 | 724 | 76x70x121 |
| 150-125 | 11 | 15 | 160 | 20 | 150x150 | 210 | 52x43x84 |
| 150-125A | 7.5 | 10 | 150 | 16 | 150x150 | 130 | 52x43x84 |
| 150-160 | 22 | 30 | 160 | 32 | 150x150 | 270 | 52x43x85 |
| 150-160A | 18.5 | 25 | 150 | 28 | 150x150 | 230 | 52x43x85 |
| 150-160B | 15 | 20 | 140 | 24 | 150x150 | 220 | 52x43x85 |
| 150-200 | 37 | 50 | 160 | 50 | 150x150 | 395 | 57x51x104 |
| 150-200A | 30 | 40 | 150 | 44 | 150x150 | 380 | 57x51x104 |
| 150-200B | 22 | 30 | 138 | 37.5 | 150x150 | 320 | 57x46x104 |
| 150-250 | 75 | 100 | 160 | 80 | 150x150 | 702 | 70x70x128 |
| 150-250A | 55 | 75 | 150 | 70 | 150x150 | S61 | 70x64x120 |
| 150-250B | 45 | 60 | 138 | 60 | 150x150 | 460 | 70x59x112 |
| 150-315 | 110 | 150 | 200 | 125 | 150x150 | 980 | 76x90x156 |
| 150-315A | 90 | 120 | 187 | 110 | 150x150 | 800 | 76x70x133 |
| 150-315B | 75 | 100 | 173 | 95 | 150x150 | 724 | 76x70x121 |
| 150-350 | 110 | 150 | 160 | 150 | 150x150 | 980 | 76x90x156 |
| 1S0-350A | 90 | 120 | 150 | 142 | 150x150 | 800 | 76x70x133 |
| 150-350B | 75 | 100 | 140 | 135 | 150x150 | 724 | 76x70x121 |
| 150-250(1) | 75 | 100 | 200 | 80 | 150x150 | 702 | 70x70x128 |
| 150-250(I)A | 55 | 75 | 187 | 70 | 150x150 | 561 | 70x64x120 |
| 150-250(DB | 45 | 60 | 173 | 60 | 150x150 | 460 | 70x59x112 |
| 150-315(1) | 110 | 150 | 200 | 125 | 150x150 | 980 | 76x90x156 |
| 150-315(I)A | 90 | 120 | 187 | 110 | 150x150 | 800 | 76x70x133 |
| 150-315(I)B | 75 | 100 | 173 | 95 | 150x150 | 724 | 76x70x121 |

## TECHNICAL DATA / *DATOS T^CNICOS*

**50 Hz n=14501/min**

| MODEL *MODELO* | Power *Potencia* | | Flow *Caudal* | Head *Altura* | DN | Wt | Dim |
|---|---|---|---|---|---|---|---|
| | kw | hp | m³/h | m | mm | kg | cm |
| 40-125(1)/4 | 0.55 | 0.75 | 6.3 | 5 | 40x40 | 42 | 34x30x55 |
| 40-160(I)/4 | 0.55 | 0.75 | 63 | 8 | 40x40 | 43 | 34x30x55 |
| 40-160(1) A/4 | 0.55 | 0.75 | 5.5 | 6 | 40x40 | 30 | 34x30x55 |
| 40-200(1)/4 | 0.75 | 1 | 6.3 | 1Z5 | 40x40 | 45 | 36x35x64 |
| 40-200(I)A/4 | 0.55 | 0.75 | 5.8 | 11 | 40x40 | 44 | 36x35x57 |
| 40-250(1)/4 | 1.5 | 2 | 63 | 20 | 40x40 | 54 | 45x43x78 |
| 40-250(I)A/4 | LI | 1.5 | 5.8 | 17 | 40x40 | 49 | 45x36x65 |
| 50-160/4 | 0.75 | 1 | 63 | 8 | 50x50 | 42 | 32x30x55 |
| 50-200/4 | 0.75 | 1 | 6.3 | 12.5 | 50x50 | 48 | 36x35x64 |
| 50-200A/4 | 0.75 | 1 | 5.5 | 9.5 | 50x50 | 46 | 36x35x57 |
| 50-250/4 | 1.5 | 2 | 6.3 | 20 | 50x50 | 58 | 44x43x78 |
| 50-250A/4 | 1.1 | 1.5 | 5.8 | 17 | 50x50 | 50 | 44x36x65 |
| 50-125(1)/4 | 0.55 | 0.75 | 12.5 | S | 50x50 | 44 | 34x28x55 |
| 50-160(1)/4 | 0.55 | 0.75 | 12.5 | 8 | 50x50 | 46 | 36x31x57 |
| 50-160(I)A/4 | 0.55 | 0.75 | 11 | 6 | 50x50 | 44 | 36x31x57 |
| 50-200(1)/4 | 1.1 | 1.5 | 12.5 | 12.5 | 50x50 | 52 | 38x35x64 |
| 50-200(I)A/4 | 0.75 | 1 | 11.2 | 10 | 50x50 | 48 | 38x35x64 |
| 50-250(1)/4 | 2.2 | 3 | 12.5 | 20 | 50x50 | 73 | 46x44x79 |
| 50-250(I)A/4 | 1.5 | 2 | 11.7 | 17.5 | 50x50 | 65 | 46x44x79 |
| 50-250(I)B/4 | 1.1 | 1.5 | 10 | 13 | 50x50 | 60 | 46x44x79 |
| 50-315(1)/4 | 4 | 5.5 | 12.5 | 32 | 50x50 | 89 | 55x51x92 |
| 50-315(I)A/4 | 3 | 4 | 11.7 | 28 | 50x50 | 84 | 55x47x86 |
| 50-315(I)B/4 | 3 | 4 | 10 | 21 | 50x50 | 82 | 55x44x83 |
| 65-125/4 | 0.55 | 0.75 | 12.5 | 5 | 65x65 | 41 | 34x28x55 |
| 65-160/4 | 0.75 | 1 | 12.5 | 8 | 65x65 | 46 | 36x31x57 |
| 65-160A/4 | 0.55 | 0.75 | 11 | 6 | 65x65 | 35 | 36x31x57 |
| 65-200/4 | 1.1 | 1.5 | 12.5 | 12.5 | 65x65 | 52 | 38x35x64 |
| 65-200A/4 | 0.75 | 1 | 11.2 | 10 | 65x65 | 48 | 38x35x64 |
| 65-250/4 | 2.2 | 3 | 12.5 | 20 | 65x65 | 76 | 48x44x79 |
| 65-250A/4 | 1.5 | 2 | 11.7 | 17.5 | 65x65 | 68 | 48x44x79 |
| 65-250B/4 | 1.1 | 1.5 | 10 | 13 | 65x65 | 63 | 48x44x79 |
| 65-315/4 | 4 | 5.5 | 12.5 | 32 | 65x65 | 89 | 55x51x92 |
| 65-315A/4 | 3 | 4 | 11.7 | 28 | 65x65 | 85 | 55x47x86 |
| 65-315B/4 | 3 | 4 | 10 | 21 | 65x65 | 82 | 55x44x84 |
| 65-125(1)/4 | 0.75 | 1 | 25 | 5 | 65x65 | 49 | 40x36x66 |
| 65-160(1)/4 | 1.1 | 1.5 | 25 | 8 | 65x65 | 54 | 40x36x66 |
| 65-160(DA/4 | 0.75 | 1 | 22 | 6 | 65x65 | 48 | 40x36x66 |
| 65-200(1)/4 | 2.2 | 3 | 25 | 12.5 | 65x65 | 71 | 45x43x80 |
| 65-200(1) A/4 | 1.5 | 2 | 23.3 | 11 | 65x65 | 62 | 45x43x80 |
| 65-250(1)/4 | 3 | 4 | 25 | 20 | 65x65 | 85 | 48x47x87 |
| 65-250(I)A/4 | 3 | 4 | 22.2 | 15.8 | 65x65 | 80 | 48x43x85 |
| 65-250(I)B/4 | 2.2 | 3 | 20 | 12.8 | 65x65 | 74 | 48x43x81 |
| 65-315(1)/4 | 5.5 | 7.5 | 25 | 32 | 65x65 | 120 | 58x53x100 |
| 65-315(I)A/4 | 4 | 5.5 | 22.5 | 26 | 65x65 | 110 | 58x53x100 |
| 65-315(I)B/4 | 4 | 5.5 | 20 | 21 | 65x65 | 100 | 58x53x100 |
| 80-125/4 | 0.75 | 1 | 25 | 5 | 80x80 | 48 | 40x36x66 |
| 80-160/4 | 1.5 | 2 | 25 | 8 | 80x80 | 55 | 40x36x66 |
| 80-160A/4 | 1.1 | 1.5 | 22 | 6 | 80x80 | 51 | 40x36x66 |
| 80-200/4 | 2.2 | 3 | 25 | 12.5 | 80x80 | 72 | 43x43x80 |
| 80-200A/4 | 1.5 | 2 | 23.3 | 10 | 80x80 | 64 | 43x43x80 |
| 80-250/4 | 3 | 4 | 25 | 20 | 80x80 | 89 | 48x47x87 |

| MODEL *MODELO* | Power *Potencia* | | Flow *Caudal* | Head *Altura* | DN | Wt | Dim |
|---|---|---|---|---|---|---|---|
| | kw | hp | m³/h | m | mm | kg | cm |
| 80-250A/4 | 3 | 4 | 22.2 | 15.8 | 80x80 | 85 | 48x43x85 |
| 80-250B/4 | 2.2 | 3 | 20 | 12.8 | 80x80 | 78 | 48x43x81 |
| 80-315/4 | 5.5 | 7.5 | 25 | 32 | 80x80 | 130 | 58x53x100 |
| 80-31SA/4 | 4 | 5.5 | 23 | 27.9 | 80x80 | 102 | 58x53x100 |
| 80-315B/4 | 4 | 5.5 | 22.3 | 25 | 80x80 | 95 | 58x53x100 |
| 80-125(1)/4 | 1.5 | 2 | 50 | 5 | 80x80 | 61 | 45x43x81 |
| 80-160(1)/4 | 2.2 | 3 | 50 | 8 | 80x80 | 82 | 50x43x84 |
| 80-160(1) A/4 | 1.5 | 2 | 44.7 | 6 | 80x80 | 74 | 50x43x84 |
| 80-160(I)B/4 | 1.5 | 2 | 43.2 | 5.8 | 80x80 | 74 | 50x43x84 |
| 80-200(1)/4 | 3 | 4 | 50 | 12.5 | 80x80 | 97 | 48x48x88 |
| 80-200(I)A/4 | 3 | 4 | 46.8 | 11 | 80x80 | 93 | 48x43x86 |
| 80-250(1)/4 | 5.5 | 7.5 | 50 | 20 | 80x80 | 134 | 55x52x102 |
| 80-250(I)A/4 | 4 | 5.5 | 46 | 17 | 80x80 | 106 | 55x52x102 |
| 80-250(I)B/4 | 3 | 4 | 40.5 | 13 | 80x80 | 100 | 55x52x102 |
| 80-315(1)/4 | 11 | 15 | 50 | 32 | 80x80 | 217 | 64x70x124 |
| 80-315(1) A/4 | 7.5 | 10 | 46 | 27.9 | 80x80 | 180 | 64x65x117 |
| 80-315(I)B/4 | 5.5 | 7.5 | 40.5 | 21 | 80x80 | 166 | 64x58x108 |
| 100-125/4 | 1.5 | 2 | 50 | 5 | 100x100 | 70 | 44x43x81 |
| 100-160/4 | 2.2 | 3 | 50 | 8 | 100x100 | 87 | 50x43x84 |
| 100-160A/4 | 1.5 | 2 | 46 | 6 | 100x100 | 79 | 50x43x84 |
| 100-200/4 | 3 | 4 | 50 | 12.5 | 100x100 | 100 | 48x48x88 |
| 100-200A/4 | 2.2 | 3 | 44.7 | 10 | 100x100 | 90 | 48x43x86 |
| 100-250/4 | 5.5 | 7.5 | 50 | 20 | 100x100 | 140 | 55x52x102 |
| 100-250A/4 | 4 | 5.5 | 46 | 17 | 100x100 | 112 | 55x52x102 |
| 100-250B/4 | 3 | 4 | 40.5 | 13 | 100x100 | 105 | 55x52x102 |
| 100-315/4 | 11 | 15 | 50 | 32 | 100x100 | 225 | 64x70x124 |
| 100-315A/4 | 7.5 | 10 | 46.7 | 27.9 | 100x100 | 180 | 64x64x117 |
| 100-315B/4 | 5.5 | 7.5 | 40.5 | 21 | 100x100 | 165 | 64x58x108 |
| 100-125(1)/4 | 2.2 | 3 | 80 | 5 | 100x100 | 95 | 50x30x81 |
| 100-160(1)/4 | 4 | 5.5 | 80 | 8 | 100x100 | 118 | 50x33x89 |
| 100-160(1) A/4 | 3 | 4 | 72 | 6 | 100x100 | 113 | 50x33x89 |
| 100-200(0/4 | 5.5 | 7.5 | 80 | 12.5 | 100x100 | 148 | 54x36x97 |
| 100-200(1) A/4 | 4 | 5.5 | 72 | 10 | 100x100 | 123 | 54x35x97 |
| 100-250(1)/4 | 11 | 15 | 100 | 20 | 100x100 | 208 | 60x44x112 |
| 100-250(1) A/4 | 7.5 | 10 | 93.3 | 17.4 | 100x100 | 165 | 60x36x112 |
| 100-250(I)B/4 | 5.5 | 7.5 | 69 | 15 | 100x100 | 149 | 60x36x112 |
| 100-315(1)/4 | 15 | 20 | 80 | 32 | 100x100 | 234 | 63x45x129 |
| 100-315(1) A/4 | 11 | 15 | 75 | 27.5 | 100x100 | 213 | 63x45x129 |
| 100-315(I)B/4 | 7.5 | 10 | 72 | 24 | 100x100 | 165 | 63x45x129 |
| 100-400(1)/4 | 30 | 40 | 80 | 44 | 100x100 | 375 | 71x54x129 |
| 100-400(I)A/4 | 22 | 30 | 75 | 44 | 100x100 | 295 | 71x54x129 |
| 100-400(I)B/4 | 18.5 | 25 | 70 | 38 | 100x100 | 257 | 71x54x129 |
| 125-125/4 | 2.2 | 3 | 100 | 5 | 125x125 | 148 | 52x43x84 |
| 125-160/4 | 3 | 4 | 80 | 8 | 12Sxl25 | 205 | 52x46x92 |
| 125-160A/4 | 2.2 | 3 | 69.3 | 6 | 125x125 | 165 | 52x43x89 |
| 125-200/4 | 5.5 | 7.5 | 80 | 12.5 | 125x125 | 249 | 54x51x104 |
| 125-200A/4 | 4 | 5.5 | 75 | 11 | 125x125 | 237 | 54x51x104 |
| 125-250/4 | 11 | 15 | 100 | 20 | 125x125 | 220 | 68x66x118 |
| 125-250A/4 | 7.5 | 10 | 93.3 | 17.4 | 125x125 | 210 | 68x57x108 |
| 125-250B/4 | 5.5 | 7.5 | 87 | 15 | 125x125 | 195 | 68x51x105 |
| 125-315/4 | 15 | 20 | 100 | 32 | 125x125 | 300 | 68x69x135 |

## TECHNICAL DATA / *DATOS T^CNICOS*

**50 Hz n=1450 1/min**

| MODEL *MODELO* | Power *Potencia* | | Flow *Caudal* | Head *Altura* | DN | Wt | Dim |
|---|---|---|---|---|---|---|---|
| | kw | hp | m³/h | m | mm | kg | cm |
| 125-315A/4 | 11 | 15 | 95 | 27 | 125x125 | 282 | 68x69x135 |
| 125-315B/4 | 11 | 15 | 87 | 24 | 125x125 | 245 | 68x69x135 |
| 125-400/4 | 30 | 40 | 100 | 50 | 125x125 | 375 | 71x54x105 |
| 125-400A/4 | 22 | 30 | 94 | 44 | 125x125 | 295 | 71x54x105 |
| 125-400B/4 | 18.5 | 25 | 87 | 37.5 | 125x125 | 257 | 71x54x100 |
| 125-200(1)/4 | 11 | 15 | 200 | 12.5 | 125x125 | 244 | 68x44x64 |
| 125-200(DA/4 | 7.5 | 10 | 179 | 10 | 125x125 | 210 | 68x42x62 |
| 125-250(1)/4 | 15 | 20 | 200 | 20 | 125x125 | 265 | 68x42x91 |
| 125-250(I)A/4 | 11 | 15 | 184.4 | 17 | 125x125 | 241 | 68x42x91 |
| 125-250(I)B/4 | 7.5 | 10 | 167 | 14 | 125x125 | 210 | 68x42x85 |
| 125-315(1)/4 | 22 | 30 | 200 | 32 | 125x125 | 335 | 74x47x98 |
| 125-315(I)A/4 | 18.5 | 25 | 187 | 28 | 125x125 | 315 | 74x44x95 |
| 125-315(I)B/4 | 15 | 20 | 173 | 24 | 125x125 | 265 | 74x44x95 |
| 125-400(1)/4 | 45 | 60 | 200 | 50 | 125x125 | 490 | 78x57x107 |
| 125-400(DA/4 | 37 | 50 | 187 | 44 | 125x125 | 454 | 78x56x105 |
| 125-400(I)B/4 | 30 | 40 | 160 | 38 | 125x125 | 435 | 78x56x105 |
| 150-200/4 | 15 | 20 | 200 | 12.5 | 150x150 | 265 | 68x44x93 |
| 150-200A/4 | 11 | 15 | 179 | 10 | 1S0X150 | 244 | 68x44x89 |
| 150-250/4 | 18.5 | 25 | 200 | 20 | 150x150 | 300 | 70x48x96 |
| 150-250A/4 | 15 | 20 | 184.4 | 17 | 150x150 | 262 | 70x48x94 |
| 150-250B/4 | 11 | 15 | 167 | 14 | 150x150 | 241 | 70x45x90 |
| 150-315/4 | 30 | 40 | 200 | 32 | ISOxISO | 410 | 76x53x108 |
| 150-315A/4 | 22 | 30 | 187 | 28 | 150x150 | 335 | 76x51x100 |
| 150-315B/4 | 18.5 | 25 | 173 | 24 | 150x150 | 315 | 76x51x96 |
| 150-400/4 | 45 | 60 | 200 | 50 | 150x150 | 490 | 80x60x112 |
| 150-400A/4 | 37 | 50 | 187 | 44 | 150x150 | 454 | 80x60x110 |
| 150-400B/4 | 30 | 40 | 174 | 38 | 150x150 | 435 | 80x56x108 |
| 150-400C/4 | 22 | 30 | 160 | 32 | 150x150 | 365 | 80x54x100 |
| 150-200(1)/4 | 15 | 20 | 200 | 12.5 | 150x150 | 265 | 68x44x93 |
| 150-200(I)A/4 | 11 | 15 | 179 | 10 | 150x150 | 244 | 68x44x89 |
| 150-250(0/4 | 18.5 | 25 | 200 | 20 | 150x150 | 305 | 75x48x96 |
| 150-250(DA/4 | 15 | 20 | 187 | 17.5 | 150x150 | 267 | 75x48x94 |
| 150-250(I)B/4 | 11 | 15 | 173 | 14 | 150x150 | 246 | 75x45x90 |
| 150-315(1)/4 | 30 | 40 | 200 | 32 | 150x150 | 417 | 80x53x108 |
| 150-315(1) A/4 | 22 | 30 | 187 | 28 | 150x150 | 342 | 80x51x100 |
| 150-315(DB/4 | 18.5 | 25 | 173 | 24 | 150x150 | 322 | 80x51x96 |
| 150-400(1)/4 | 45 | 60 | 200 | 50 | 150x150 | 498 | 86x60x112 |
| 150-400(1) A/4 | 37 | 50 | 187 | 44 | 150x150 | 462 | 86x60x110 |
| 150-400(DB/4 | 30 | 40 | 173 | 37.5 | 150x150 | 443 | 86x56x108 |
| 150-400(I)C/4 | 22 | 30 | 160 | 32 | 150x150 | 373 | 86x54x100 |
| 200-200/4 | 15 | 20 | 200 | 12.5 | 200x200 | 265 | 68x44x93 |
| 200-200A/4 | 11 | 15 | 179 | 10 | 200x200 | 244 | 68x44x89 |
| 200-250/4 | 18.5 | 25 | 200 | 20 | 200x200 | 305 | 75x48x96 |
| 200-250A/4 | 15 | 20 | 184.4 | 17 | 200x200 | 267 | 75x48x94 |
| 200-250B/4 | 11 | 15 | 179 | 14 | 200x200 | 246 | 75x45x90 |
| 200-315/4 | 30 | 40 | 200 | 32 | 200x200 | 417 | 80x53x108 |
| 200-315A/4 | 22 | 30 | 187 | 28 | 200x200 | 342 | 80x51x100 |
| 200-31SB/4 | 18.5 | 25 | 173 | 24 | 200x200 | 322 | 80x51x96 |
| 200-400/4 | 45 | 60 | 200 | 50 | 200x200 | 498 | 86x60x112 |

| MODEL *MODELO* | Power *Potencia* | | Flow *Caudal* | Head *Altura* | DN | Wt | Dim |
|---|---|---|---|---|---|---|---|
| | kw | hp | m³/h | m | mm | kg | cm |
| 200-400A/4 | 37 | 50 | 187 | 44 | 200x200 | 462 | 86x60x110 |
| 200-400B/4 | 30 | 40 | 174 | 38 | 200x200 | 443 | 86x56x108 |
| 200-400C/4 | 22 | 30 | 160 | 32 | 200x200 | 373 | 86x54x100 |
| 200-200(1)/4 | 22 | 30 | 400 | 12.5 | 200x200 | 382 | 81x53x103 |
| 200-200(I)A/4 | 18.5 | 25 | 358 | 10 | 200x200 | 346 | 81x53x97 |
| 200-250(1)/4 | 30 | 40 | 400 | 20 | 200x200 | 475 | 83x53x111 |
| 200-250(I)A/4 | 22 | 30 | 358 | 16 | 200x200 | 405 | 83x51x104 |
| 200-250(I)B/4 | 18.5 | 25 | 322 | 13 | 200x200 | 387 | 83x51x100 |
| 200-315(1)/4 | 55 | 75 | 400 | 32 | 200x200 | 675 | 86x65x127 |
| 200-315(I)A/4 | 45 | 60 | 374 | 28 | 200x200 | 560 | 86x63x118 |
| 200-315(I)B/4 | 37 | 50 | 346 | 24 | 200x200 | 535 | 86x63x115 |
| 200-400(1)/4 | 75 | 100 | 400 | 50 | 200x200 | 830 | 88x70x134 |
| 200-400(I)A/4 | 75 | 100 | 374 | 44 | 200x200 | 830 | 88x70x134 |
| 200-400(I)B/4 | 55 | 75 | 346 | 38 | 200x200 | 685 | 88x64x127 |
| 200-400(I)C/4 | 45 | 60 | 320 | 32 | 200x200 | 580 | 88x60x119 |
| 250-250/4 | 45 | 60 | 550 | 20 | 250x250 | 620 | 111x55x115 |
| 250-250A/4 | 37 | 50 | 500 | 17 | 250x250 | 550 | 111x55x115 |
| 250-315/4 | 75 | 100 | 550 | 32 | 250x250 | 890 | 111x64x135 |
| 250-315A/4 | 55 | 75 | 500 | 28 | 250x250 | 690 | 111x64x135 |
| 250-315B/4 | 45 | 60 | 450 | 24 | 250x250 | 620 | 111x64x135 |
| 250-400/4 | 110 | 150 | 500 | 50 | 250x250 | 1530 | 120x90x156 |
| 250-400A/4 | 90 | 120 | 500 | 44 | 250x250 | 1320 | 120x90x146 |
| 250-400B/4 | 75 | 100 | 450 | 38 | 250x250 | 950 | 120x90x136 |
| 250-500/4 | 200 | 270 | 550 | 80 | 250x250 | 2000 | 130x90x192 |
| 250-500A/4 | 160 | 215 | 506 | 71 | 250x250 | 1850 | 130x90x173 |
| 250-500B/4 | 132 | 176 | 466 | 63.5 | 250x250 | 1750 | 130x90x169 |
| 300-250/4 | 55 | 75 | 720 | 20 | 300x300 | 690 | 125x60x151 |
| 300-250A/4 | 4S | 60 | 600 | 17 | 300x300 | 620 | 125x60x142 |
| 300-315/4 | 90 | 120 | 720 | 32 | 300x300 | 1320 | 100x67x153 |
| 300-315A/4 | 75 | 100 | 650 | 28 | 300x300 | 950 | 100x67x148 |
| 300-315B/4 | 55 | 75 | 580 | 24 | 300x300 | 750 | 100x67x148 |
| 300-400/4 | 110 | 150 | 720 | 50 | 300x300 | 1530 | 150x67x177 |
| 300-400A/4 | 110 | 150 | 637 | 44 | 300x300 | 1530 | 150x67x173 |
| 300-400B/4 | 90 | 120 | 563 | 38 | 300x300 | 1320 | 150x67x170 |
| 300-400C/4 | 75 | 100 | 561 | 33 | 300x300 | 950 | 150x67x153 |
| 300-500/4 | 250 | 335 | 720 | 80 | 300x300 | 2300 | 150x90x196 |
| 300-500A/4 | 200 | 270 | 675 | 70 | 300x300 | 2000 | 150x90x196 |
| 300-500B/4 | 160 | 215 | 625 | 60 | 300x300 | 1850 | 150x90x196 |
| 350-315/4 | 90 | 120 | 800 | 32 | 350x350 | 1650 | 130x68x140 |
| 350-315A/4 | 75 | 100 | 1080 | 17 | 350x350 | 1250 | 130x68x140 |
| 350-400/4 | 160 | 215 | 800 | 50 | 350x350 | 1950 | 130x68x182 |
| 350-400A/4 | 132 | 176 | 1080 | 28 | 350x350 | 1750 | 130x68x172 |
| 350-315(1)/4 | 160 | 215 | 1200 | 32 | 350x350 | 1950 | 130x68x182 |
| 350-315(1) A/4 | 132 | 176 | 1092 | 28 | 350x350 | 1750 | 130x68x172 |
| 350-315(I)B/4 | 110 | 150 | 994 | 25 | 350x350 | 1530 | 130x68x162 |
| 350-400(1)/4 | 250 | 335 | 1200 | 50 | 350x350 | 2300 | 130x68x182 |
| 350-400(I)A/4 | 250 | 335 | 1092 | 44 | 350x350 | 2300 | 130x68x182 |
| 350-400(I)B/4 | 200 | 270 | 994 | 38.5 | 350x350 | 2000 | 130x68x172 |

## MATERIAL DESCRIPTION / *DESCRIPCI6N DE MATERIAL*

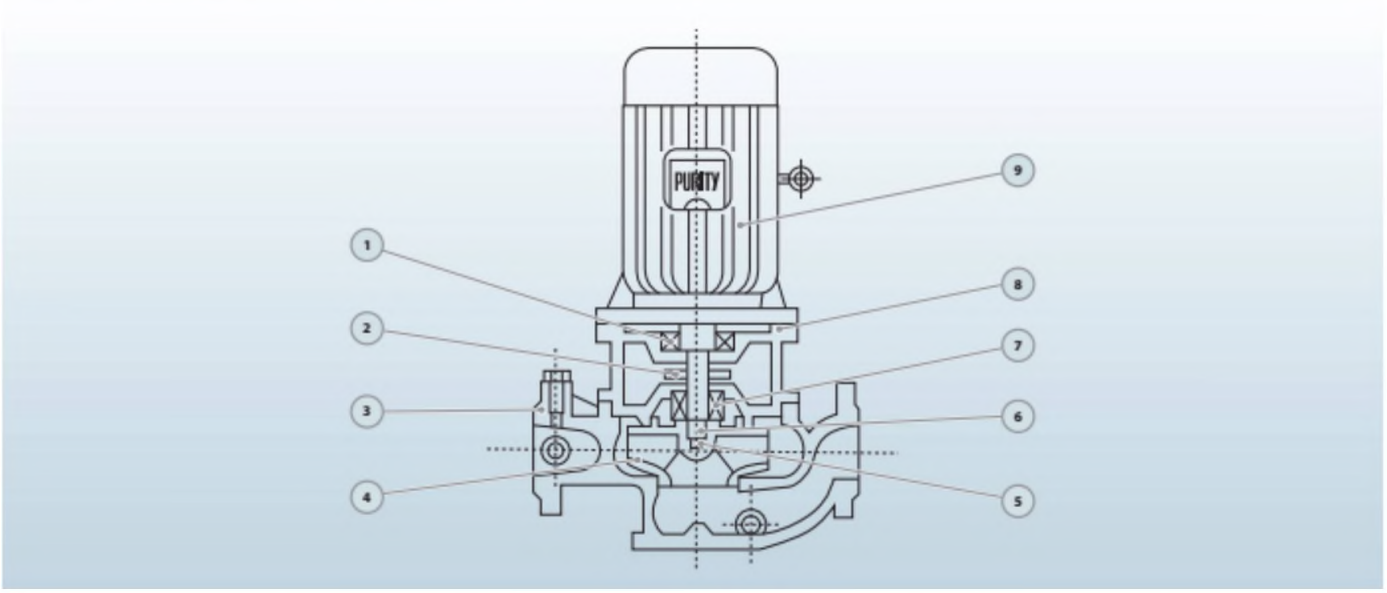


| No. | Description<br>Qfiscwciwk | Material<br>*Matenal* | No. | Description<br>QetSCWCM | Material<br>Ma renal | No. | Description<br>Oeficmcidj Os | Material<br>*M aterial* |
|---|---|---|---|---|---|---|---|---|
| 1 | Bearing<br>*Eadamisnia* | Ball Bearing<br>*Bola Rodamiento* | 4 | Impeller<br>*Impulsor* | SS304/Cast iron<br>toxix 304/twtKUQ/i | 7 | Mechanical Seal<br>*Cierre Mecánico* | SiG/Carbon/SS304<br>*SiC-Grsfito-Inox304* |
| 2 | Water Deflector<br>*Deflector* | Rubber<br>*Caucho* | 5 | Impeller Nut<br>*IU6J£de* 如四< | GahuuUuied Steel<br>*Acero Galvanizado* | 8 | Connection<br>*Conexión* | Cast iron<br>*Fundición* |
| 3 | Pump Case<br>*Cuerpn de BambA* | Cast iron<br>*Fundic ton* | | Shaft<br>*EJ&* | SS304/45# Steel<br>***Inox. 304/45^*** Uiezxa | 9 | Motor<br>*Motor* | IP55 Class F<br>*IP55 OJAS^F* |

6

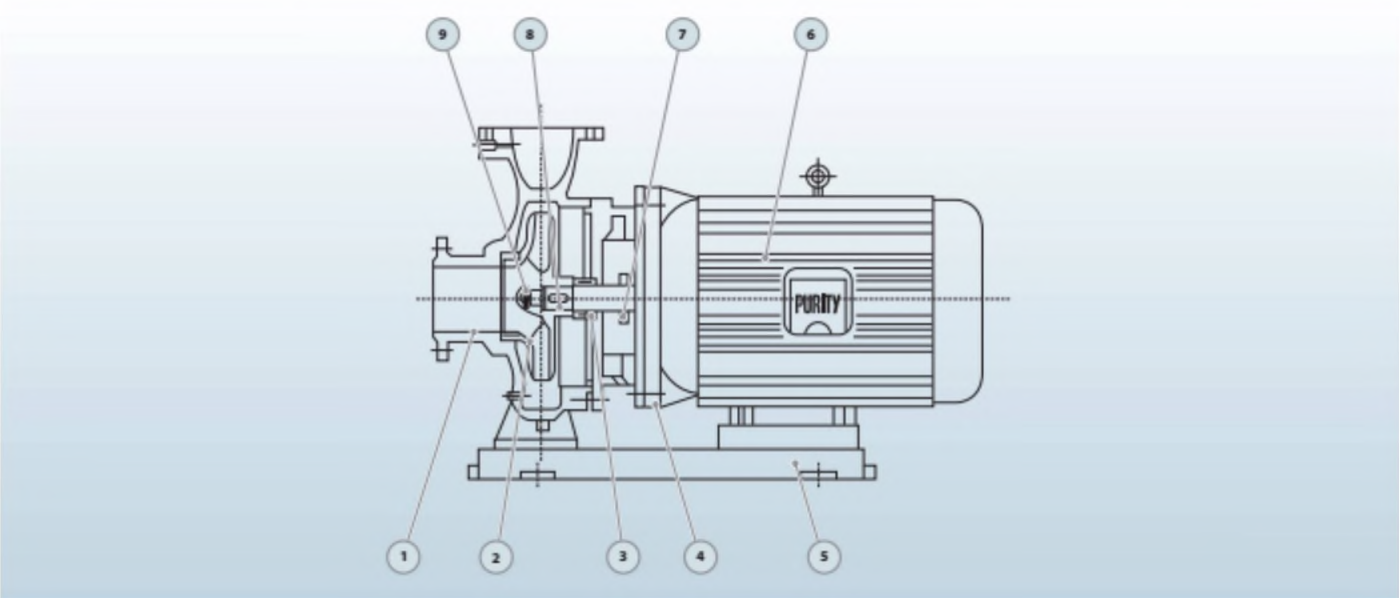


| No. | Description<br>OfiAciMiada | Material<br>*Material* | No. | Description<br>OejiCWGiQ^ | Material<br>*Material* | No. | Description<br>*Descripción* | Material<br>*M aterial* |
|---|---|---|---|---|---|---|---|---|
| 1 | Pump Case<br>*Quooxicie Bomba* | Cast iron<br>*Fundición* | 4 | Connection<br>*Conexión* | Cast iron<br>*Fundición* | 7 | Water Deflector<br>*Deflector* | Rubber<br>*Caucho* |
| 2 | Impeller<br>*Impulsor* | SS304/Cast iron<br>fopX, 3 fl 4斤j卯血給Q | 5 | Base<br>*Base* | Cast iron<br>*Fundición* | 8 | Shafi<br>氓 | SS304/45# Steel<br>toflX 304/45# ttam |
| 3 | Mechanical Seal<br>*Cierre Mecánico* | SiG^Carbon/SS304<br>*SiC-Grafito-Inox304* | 6 | Motor<br>*Motor* | IP55 Class F<br>*IP55QJas&F* | 9 | Impeller Key<br>*Chaveta Impulsor* | Iron<br>*Hierro* |

# Product Specification (60HZ)

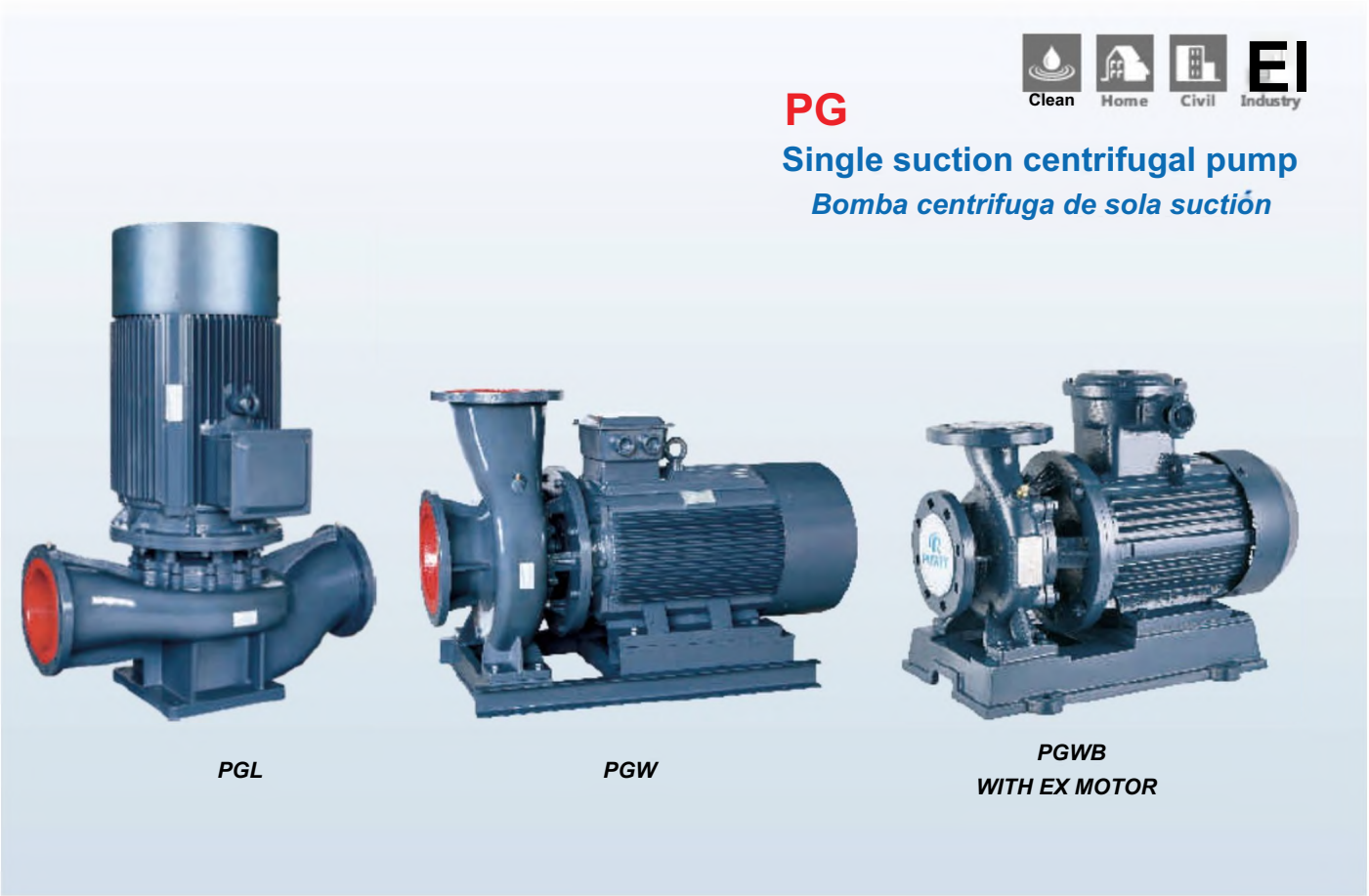


**NEW/NUEVO**

## TECHNICAL DESCRIPTION

-New centrifugal pump
• Original design by PURITY (patented)
-YE3 high efficient motor, with protection IP55 class F
-Pump case with anti-corrosive coating
■Impeller in stainless steel AISI 304 or cast iron
■ Shaft in stainless steel AISI 304 or galvanized iron
• Quality bearing, wear resistance mechanical seal

## USING LIMITS

■ Liquid temperature between -10°C and +120°C
■ Ambient temperature up to +50°C
■ Max. working pressure 16 bar
■ Continuous service S1

## APPLICATIONS

■ Suitable for use with clean water and liquids that are not chemically aggressive towards the materials from which the pump is made. The centrifugal pumps are recommended for use in water supply, cleaning sets, pressure boosting, firefighting sets, irrigation, industrial applications, water circulation in climatisation sets, agricultural.

## TECHNICAL *DKVKIDATOS TtCNICOS*

**60 HZ n=35001/min**

| MODEL *MODELO* | Power *PotMcii* | | Flow *CauM* | Head *Altura* | DN | Wt | Dim |
|---|---|---|---|---|---|---|---|
| | kw | hp | m*/h | m | mm | kg | cm |
| 25-125 | 0.75 | 1 | 4 | 20 | 25x25 | 28 | 26x23x43 |
| 25-125A | 0.75 | 1 | 3.6 | 16 | 25x25 | 27 | 26x23x43 |
| 25-160 | 1.5 | 2 | 4 | 32 | 25x25 | 39 | 30x27x43 |
| 25-160A | 11 | *15* | 3.7 | 28 | 25x25 | 34 | 30x27x43 |
| 32-125 | 0.75 | 1 | 5 | 20 | 32x32 | 28 | 26x23x44 |
| 32-125A | 0.75 | 1 | 4.5 | 16 | 32x32 | 28 | 26x23x44 |
| 32-160 | 1.5 | 2 | 4.5 | 32 | 32x32 | 39 | 32x27x50 |
| 32-160A | 11 | L5 | 4 | 28 | 32x32 | 38 | 32x27x41 |
| 32-200 | 3 | 4 | 4.5 | 50 | 32x32 | 55 | 34x33x54 |
| 32-200A | *22* | 3 | 4 | 44 | *32x32* | 74 | 34x33x54 |
| 40-100 | 0.75 | 1 | 63 | 12.5 | 40x40 | 32 | 26x23x44 |
| 40-125 | 11 | L5 | 6.3 | 20 | 40x40 | 34 | 26x23x44 |
| 40-125A | 0.75 | 1 | 5.6 | 16 | 40x40 | 33 | 28x23x44 |
| 40-160 | *22* | 3 | 6.3 | 32 | 40x40 | 47 | 32x27x50 |
| 40-16QA | 1.5 | 2 | 5.9 | 28 | 40x40 | 43 | 32x27x50 |
| 40-1G0B | 11 | 15 | 5.5 | 24 | 40x40 | 38 | 32x27x50 |
| 40-200 | 4 | 5.5 | 6.3 | 50 | 40x40 | 74 | 34x33x56 |
| 40-20QA | 3 | 4 | 5.9 | 44 | 40x40 | 62 | 34x33x56 |
| 40-200B | *22* | 3 | 3.7 | 38 | 40x40 | 52 | 34x33x56 |
| 40-250 | 7.5 | 10 | 6.3 | 80 | 40x40 | 105 | 40x40x63 |
| 4O-25OA | 55 | 7.5 | 5.9 | 70 | 40x40 | 98 | 40x40x63 |
| 40-2 50B | 4 | 5.5 | 5.5 | 60 | 40x40 | 77 | 40x40x56 |
| 40-100(]) | 1.1 | 15 | 12.5 | 12.5 | 40x40 | 34 | 30x23x45 |
| 40-100(I)A | 0.75 | 1 | 11 | 10 | 40x40 | 32 | 30x23x45 |
| 40-125(1) | 1.5 | 2 | 12.5 | 20 | 40x40 | 38 | 30x24x46 |
| 40-125(I)A | 11 | *15* | 11 | 16 | 40x40 | 33 | 30x24x45 |
| 40-160(]) | 3 | 4 | 12.5 | 32 | 40x40 | 56 | 34x30x55 |
| 40-160(])A | *22* | 3 | 117 | 28 | 40x40 | 47 | 34x30x51 |
| 40-200(]) | 5.5 | 7.5 | 12.5 | 50 | 40x40 | 85 | 36x35x63 |
| 40-200(I)A | 4 | 5.5 | 11.7 | 44 | 40x40 | 75 | 36x35x57 |
| 40-200(])B | 3 | 4 | 10.6 | 36 | 40x40 | 63 | 36x35x55 |
| 40-250(1) | 11 | 15 | 12.5 | 80 | 40x40 | 145 | 45x43x78 |
| 4O-25O(])A | 7.5 | 10 | 11.6 | 70 | 40x40 | 95 | 45x36x65 |
| 40-250(])B | 7.5 | 10 | 103 | 60 | 40x40 | 94 | 45x36x65 |
| 50-100 | 1.1 | 15 | 12.5 | 12.5 | 50x50 | 36 | 29x23x45 |
| 50-100A | 0.75 | 1 | 11 | 10 | 50x50 | 35 | 29x23x45 |
| 50-125 | 1.5 | 2 | 12.5 | 20 | 50x50 | 43 | 30x24x46 |
| 50-125A | 11 | 15 | 11 | 16 | 50x50 | 38 | 30x24x45 |
| 50-160 | 3 | 4 | 12.5 | 32 | 50x50 | 59 | 32x30x55 |
| 5O-16OA | *22* | 3 | 11.7 | 28 | 50x50 | 51 | 32x30x51 |
| 50-160B | 15 | 2 | 10.4 | 22 | 50x50 | 47 | 32x40x49 |
| 50-200 | 55 | 7.5 | 125 | 50 | 50x50 | 101 | 36x35x63 |
| 50-200A | 4 | 5.5 | 11.7 | 44 | 50x50 | 80 | 36x35x57 |
| 50-200B | 3 | 4 | 10.6 | 36 | 50x50 | 68 | 36x35x55 |
| 50-250 | 11 | 15 | 12.5 | 80 | 50x50 | 160 | 44x43x78 |
| 50-250A | 7.5 | 10 | 11.6 | 70 | 50x50 | 115 | 44x43x65 |
| 50-250B | 7.5 | 10 | 103 | 60 | 50x50 | 114 | 44x36x65 |
| 50-100(]) | 1.5 | 2 | 25 | 12.5 | 50x50 | 41 | 32x23x48 |
| 50-100(])A | 11 | 15 | 223 | 10 | 50x50 | 36 | 32x23x46 |
| 50-125(1) | 3 | 4 | 25 | 20 | 50x50 | 56 | 34x28x55 |
| 50-12 5(1)A | *22* | 3 | 223 | 16 | 50x50 | *48* | 34x28x52 |

| MODEL *MODELO* | Power Potenc/a | | Flow *Caudal* | Head *Altura* | DN | Wt | Dim |
|---|---|---|---|---|---|---|---|
| | kw | hp | m»/h | m | mm | kfl | cm |
| 50-160(1) | 4 | 5.5 | 25 | 32 | 50x50 | 72 | 36x30x57 |
| 50-160(I)A | 4 | 5.5 | 23.4 | 28 | 50x50 | 71 | 36x30x57 |
| 50-160(I)B | 3 | 4 | 2L6 | 24 | 50x50 | 59 | 36x30x55 |
| 50-200(9 | 7.5 | 10 | 25 | 50 | 50x50 | 108 | 38x35x64 |
| 50-200(DA | 7.5 | 10 | 23.5 | 44 | 50x50 | 107 | 38x35x64 |
| 50-200(QB | 5.5 | 7.5 | 2L8 | 38 | 50x50 | 100 | 38x35x64 |
| 50-250(1) | 15 | 2 | 25 | 80 | 50x50 | 175 | 46x44x79 |
| 50-250(I)A | 11 | 15 | 23.4 | 70 | 50x50 | 165 | 46x44x79 |
| 50-250 (1)B | 11 | 15 | 2L6 | 60 | 50x50 | 165 | 46x44x79 |
| 50-315(1) | 30 | 40 | 25 | 125 | 50x50 | 310 | 55x51x92 |
| 50-315(1) A | 22 | 30 | 23.7 | 113 | 50x50 | 245 | 55x47x86 |
| 50-315 (QB | 1&5 | 25 | 22.5 | 101 | 50x50 | 215 | 55x44x83 |
| 65-100 | 15 | 2 | 25 | 125 | 65x65 | 46 | 32x23x47 |
| 65-100A | U | L5 | 223 | 10 | 65x65 | 41 | 32x23x46 |
| 65-125 | 3 | 4 | 25 | 20 | 65x65 | 58 | 34x28x55 |
| 65-125A | *22* | 3 | 22.3 | 16 | 65x65 | 49 | 34x28x52 |
| 65-160 | 4 | 5.5 | 25 | 32 | 65x65 | 75 | 36x31x57 |
| 65-160A | 4 | 5.5 | 23.4 | 28 | 65x65 | 75 | 36x31x57 |
| 65-160B | 3 | 4 | 2L6 | 24 | 65x65 | 63 | 36x31x55 |
| 65-200 | 7.5 | 10 | 25 | 50 | 65x65 | 107 | 38x35x63 |
| 65-200A | 7.5 | 10 | 23.5 | 44 | 65x65 | 107 | 38x35x63 |
| 65-200B | 5.5 | 7.5 | 2L8 | 38 | 65x65 | 100 | 38x35x63 |
| 65-250 | 15 | 20 | 25 | 80 | 65x65 | 180 | 45x44x79 |
| 65-250A | 11 | 15 | 23.4 | 70 | 65x65 | 170 | 43x44x79 |
| 65-250B | 11 | 15 | 2L6 | 60 | 65x65 | 170 | 48x44x79 |
| 65-315 | 30 | 40 | 25 | 125 | 65x65 | 320 | 55x51x92 |
| 65-315A | 22 | 30 | 23.7 | 113 | 65x65 | 255 | 55x47x86 |
| 65-315B | 1&5 | 25 | 22.5 | 101 | 65x65 | 225 | 55x44x83 |
| 65-100(1) | 3 | 4 | 50 | 125 | 65x65 | 63 | 40x28x57 |
| 65*100(QA | *22* | 3 | 44.7 | 10 | 65x65 | 53 | 40x24x54 |
| 65-125(1) | 5.5 | 7.5 | 50 | 20 | 65x65 | 99 | 40x36x66 |
| 6 5-125 (QA | 4 | 5.5 | 45 | 16 | 65x65 | 78 | 40x32x60 |
| 65-160(1) | 7.5 | 10 | 50 | 32 | 65x65 | 103 | 40x36x66 |
| 65-160(I)A | 7.5 | 10 | 46.7 | 28 | 65x65 | 103 | 40x36x66 |
| 65-160 (1)B | 5.5 | 7.5 | 43.4 | 24 | 65x65 | 97 | 40x32x66 |
| 65-200(1) | 15 | 20 | 50 | 50 | 65x65 | 176 | 45x43x80 |
| 65-200(I)A | 11 | 15 | 47 | 44 | 65x65 | 166 | 45x43x80 |
| 65-200(QB | 7.5 | 10 | 43.3 | 38 | 65x65 | 114 | 45x43x67 |
| 65-250(1) | 22 | 30 | 50 | 80 | 65x65 | 235 | 43x47x87 |
| 65-250(I)A | 1&5 | 25 | 46.7 | 70 | 65x65 | 205 | 4«x43x85 |
| 65-250(I)B | 15 | 20 | 43.3 | 60 | 65x65 | 180 | 48x43x81 |
| 65-315(1) | 37 | 50 | 50 | 125 | 65x65 | 350 | 58x53x100 |
| 65-315 (I)A | 30 | 40 | 46.5 | 110 | 65x65 | 335 | 58x53x100 |
| 80-100 | 3 | 4 | 50 | 125 | 80x80 | 63 | 40x28x57 |
| 80-100A | 22 | 3 | 44.7 | 10 | 80x80 | 54 | 40x24x54 |
| 80-125 | 5.5 | 7.5 | 50 | 20 | 80x80 | 99 | 40x36x66 |
| 80-125A | 4 | 5.5 | 45 | 16 | 80x80 | 79 | 40x32x60 |
| 80-160 | 7.5 | 10 | 50 | 32 | 80x80 | 105 | 40x36x66 |
| 80<160A | 7.5 | 10 | 46.7 | 28 | 80x80 | 105 | 40x36x66 |
| 80-160B | 5.5 | 7.5 | 43.4 | *24* | 80x80 | 98 | 40x%x66 |
| 80-200 | 15 | 20 | 50 | 50 | 80x80 | 175 | 43x43x80 |

## TECHNICAL DATA / *DATOS T^CNICOS*

**60 HZ n=35001/min**

| MODEL *MODELO* | Power *Potencia* | | Flow *Caudal* | Head *Altura* | DN | Wt | Dim |
|---|---|---|---|---|---|---|---|
| | kw | hp | mYh | m | mm | kg | cm |
| 80-200A | 11 | 15 | 47 | 44 | 80x80 | 165 | 43x43x80 |
| 80-200B | 7.5 | 10 | 43.3 | 38 | 80x80 | 115 | 43x36x66 |
| 80-250 | 22 | 30 | 50 | 80 | 80x80 | 240 | 48x47x87 |
| 80-2S0A | 18.5 | 25 | 46.7 | 70 | 80x80 | 210 | 48x43x85 |
| 80-250B | 15 | 20 | 433 | 60 | 80x80 | 185 | 48x43x81 |
| 80-315 | 37 | 50 | 50 | 125 | 80x80 | 355 | 58x53x100 |
| 80-315A | 30 | 40 | 46.5 | 110 | 80x80 | 340 | 58x53x100 |
| 80-315B | 30 | 40 | 44.5 | 100 | 80x80 | 340 | 58x53x100 |
| 80-315C | 22 | 30 | 41 | 85 | 80x80 | 275 | 58x47x89 |
| 80-350 | 55 | 75 | 50 | 150 | 80x80 | 535 | 64x64x117 |
| 80-350A | 45 | 60 | 44.5 | 142 | 80x80 | 420 | 64x58x108 |
| 80-350B | 37 | 50 | 41 | 135 | 80x80 | 366 | 64x52x104 |
| 80-100(1) | 5.5 | 7.5 | 100 | 125 | 80x80 | 108 | 46x36x68 |
| 80-100(I)A | 4 | 5.5 | 89 | 10 | 80x80 | 87 | 46x36x62 |
| 80-125(1) | 11 | 15 | 100 | 20 | 80x80 | 163 | 45x43x81 |
| 80-125(I)A | 7.5 | 10 | 89 | 16 | 80x80 | 113 | 45x35x67 |
| 80-160(1) | 15 | 20 | 100 | 32 | 80x80 | 184 | 50x43x84 |
| 80-160(I)A | 11 | 15 | 93.5 | 28 | 80x80 | 174 | 50x43x84 |
| 80-160 (I)B | 11 | 15 | 86.6 | 24 | 80x80 | 174 | 50x43x84 |
| 80-200(1) | 22 | 30 | 100 | 50 | 80x80 | 251 | 48x48x88 |
| 80-200(I)A | 18.5 | 25 | 93.5 | 44 | 80x80 | 220 | 48x43x86 |
| 80-200(I)B | 15 | 20 | 87 | 38 | 80x80 | 198 | 48x43x81 |
| 80-250(1) | 37 | 50 | 100 | 80 | 80x80 | 330 | 55x52x102 |
| 80-250 (I)A | 30 | 40 | 93.5 | 70 | 80x80 | 315 | 55x52x102 |
| 80-250 (I)B | 30 | 40 | 87 | 60 | 80x80 | 315 | 55x52x102 |
| 80-315(1) | 75 | 100 | 100 | 125 | 80x80 | 675 | 64x70x124 |
| 80-315 (I)A | 55 | 75 | 95 | 113 | 80x80 | 535 | 64x64x117 |
| 80-315 (1)B | 45 | 60 | 90 | 101 | 80x80 | 420 | 64x58x108 |
| 80-315(I)C | 37 | 50 | 82 | 85 | 80x80 | 366 | 64x52x104 |
| 100-100 | 5.5 | 7.5 | 100 | 125 | 100x100 | 113 | 46x36x67 |
| 100-100A | 4 | 5.5 | 89 | 10 | 100x100 | 91 | 46x32x62 |
| 100-125 | 11 | 15 | 100 | 20 | 100x100 | 169 | 44x43x81 |
| 100-12 SA | 7.5 | 10 | 89 | 16 | 100x100 | 118 | 45x35x67 |
| 100-160 | 15 | 20 | 100 | 32 | 100x100 | 191 | 50x43x84 |
| 10016QA | 11 | 15 | 93.5 | 28 | 100x100 | 181 | 50x43x84 |
| 100-160B | 11 | 15 | 86.6 | 24 | 100x100 | 181 | 50x43x84 |
| 100-200 | 22 | 30 | 100 | 50 | 100x100 | 245 | 48x48x88 |
| 100-200A | 18.5 | 25 | 93.5 | 44 | 100x100 | 215 | 48x43x86 |
| 100-200B | 15 | 20 | 87 | 38 | 100x100 | 193 | 48x43x82 |
| 100-250 | 37 | 50 | 100 | 80 | 100x100 | 345 | 55x52x102 |
| 100-25QA | 30 | 40 | 93.5 | 70 | 100x100 | 330 | 55x52x102 |
| 100-250B | 30 | 40 | 87 | 60 | 100x100 | 330 | 55x52x102 |
| 100-315 | 75 | 100 | 100 | 125 | 100x100 | 689 | 64x70x124 |
| 1OO-315A | 55 | 75 | 95 | 113 | 100x100 | 549 | 64x64x117 |
| 1OO-315B | 45 | 60 | 90 | 101 | 100x100 | 439 | 64x58x108 |
| 100-350 | 90 | 120 | 100 | 150 | 100x100 | 950 | 68x63x131 |
| 100-35QA | 75 | 100 | 88 | 142 | 100x100 | 830 | 68x63x126 |
| 100-350B | 55 | 75 | 80 | 135 | 100x100 | 600 | 68x61x119 |
| 100-100(1) | 11 | 15 | 160 | 12.5 | 100x100 | 115 | 50x42x80 |
| 100-125(1) | 15 | 20 | 160 | 20 | 100x100 | 168 | 50x30x81 |
| 100-12 5(1) A | 11 | 15 | 140 | 17 | 100x100 | 168 | 50x28x81 |

| MODEL *MODELO* | Power *Potencia* | | Flow *Caudal* | Head *Altura* | DN | Wt | Dim |
|---|---|---|---|---|---|---|---|
| | kw | hp | m³/h | m | mm | kg | cm |
| 100-1600) | 22 | 30 | 160 | 32 | 100x100 | 210 | 50x33x89 |
| 100-160(I)A | 18.5 | 25 | 140 | 28 | 100x100 | 210 | 50x33x89 |
| 100-2000) | 37 | 50 | 160 | 50 | 100x100 | 402 | 54x36x97 |
| 100-200(I)A | 30 | 40 | 140 | 45 | 100x100 | 395 | 54x35x97 |
| 100-20（XI)B | 22 | 30 | 100 | 40 | 100x100 | 360 | 54x35x97 |
| 100-250(1) | 55 | 75 | 160 | 80 | 100x100 | 560 | 60x44x112 |
| 100-2 50(1) A | 45 | 60 | 140 | 72 | 100x100 | 420 | 60x36x112 |
| 100-250(I)B | 37 | 50 | 100 | 65 | 100x100 | 400 | 60x36x112 |
| 125-100 | 11 | 15 | 160 | 125 | 125x125 | 180 | 52x43x83 |
| 125-100A | 7.5 | 10 | 143 | 10 | 125x125 | 125 | 52x36x83 |
| 125-125 | 15 | 20 | 160 | 20 | 125x125 | 220 | 52x43x84 |
| 125-125A | 11 | 15 | 143 | 16 | 125x125 | 210 | 52x43x84 |
| 125-160 | 22 | 30 | 160 | 32 | 125x125 | 265 | 52x46x92 |
| 125-160A | 18.5 | 25 | 150 | 28 | 125x125 | 230 | 52x43x89 |
| 125-160B | 15 | 20 | 138 | 24 | 125x125 | 215 | 52x43x85 |
| 125-200 | 37 | 50 | 160 | 50 | 125x125 | 395 | 57x51x104 |
| 125-200A | 30 | 40 | 150 | 44 | 125x125 | 380 | 57x51x104 |
| 125-200B | 22 | 30 | 138 | 375 | 125x125 | 320 | 57x46x104 |
| 125-250 | 55 | 75 | 160 | 80 | 125x125 | 580 | 68x66x118 |
| 125-250A | 45 | 60 | 150 | 70 | 125x125 | 490 | 68x57x108 |
| 125-250B | 37 | 50 | 138 | 60 | 125x125 | 430 | 68x51x105 |
| 125-315 | 90 | 120 | 160 | 125 | 125x125 | 790 | 68x69x135 |
| 125-315A | 75 | 100 | 150 | 110 | 125x125 | 710 | 68x69x130 |
| 125-315B | 75 | 100 | 143 | 100 | 125x125 | 705 | 68x69x135 |
| 125-315C | 55 | 75 | 134 | 88 | 125x125 | 585 | 68x66x123 |
| 125-350 | 110 | 150 | 160 | 150 | 125x125 | 980 | 76x90x156 |
| 125-350A | 90 | 120 | 150 | 142 | 125x125 | 800 | 76x70x133 |
| 125-350B | 75 | 100 | 143 | 135 | 125x125 | 724 | 76x70x121 |
| 150-125 | 11 | 15 | 160 | 20 | 150x150 | 210 | 52x43x84 |
| 150-125A | 7.5 | 10 | 150 | 16 | 150x150 | 130 | 52x43x84 |
| 150-160 | 22 | 30 | 160 | 32 | 150x150 | 270 | 52x43x85 |
| 150-160A | 18.5 | 25 | 150 | 28 | 150x150 | 230 | 52x43x85 |
| 150-160B | 15 | 20 | 140 | 24 | 150x150 | 220 | 52x43x85 |
| 150-200 | 37 | 50 | 160 | 50 | 150x150 | 395 | 57x51x104 |
| 1S0-200A | 30 | 40 | 150 | 44 | 150x150 | 380 | 57x51x104 |
| 150-200B | 22 | 30 | 138 | 375 | 150x150 | 320 | 57x46x104 |
| 150-250 | 75 | 100 | 160 | 80 | 150x150 | 702 | 70x70x128 |
| 150-25QA | 55 | 75 | 150 | 70 | 150x150 | 561 | 70x64x120 |
| 15O-25OB | 45 | 60 | 138 | 60 | 150x150 | 460 | 70x59x112 |
| 150-315 | 110 | 150 | 200 | 125 | 150x150 | 980 | 76x90x156 |
| 150-315A | 90 | 120 | 187 | 110 | 150x150 | 800 | 76x70x133 |
| 150-315B | 75 | 100 | 173 | 95 | 150x150 | 724 | 76x70x121 |
| 150-350 | 110 | 150 | 160 | 150 | 150x150 | 980 | 76x90x156 |
| 150-350A | 90 | 120 | 150 | 142 | 150x150 | 800 | 76x70x133 |
| 15O-35OB | 75 | 100 | 140 | 135 | 150x150 | 724 | 76x70x121 |
| 150-2500) | 75 | 100 | 200 | 80 | 150x150 | 702 | 70x70x128 |
| 15O-25O(I)A | 55 | 75 | 187 | 70 | 150x150 | 561 | 70x64x120 |
| 150-250(I)B | 45 | 60 | 173 | 60 | 150x150 | 460 | 70x59x112 |
| 150315(1) | 110 | 150 | 200 | 125 | 150x150 | 980 | 76x90x156 |
| 150-315(I)A | 90 | 120 | 187 | 110 | 150x150 | 800 | 76x70x133 |
| 150-315(I)B | 75 | 100 | 173 | 95 | 150x150 | 724 | 76x70x121 |

## TECHNICAL DATA / *DATOS T^CNICOS*

**60 HZ n=17501/min**

| MODEL *MODELO* | Power *Potencia* | | Flow *Caudal* | Head *Altura* | DN | Wt | Dim |
|---|---|---|---|---|---|---|---|
| | kw | hp | m³/h | m | mm | *9 | cm |
| 40-125(1)/4 | 055 | 0.75 | 63 | 5 | 40x40 | 42 | 34x30x55 |
| 40-160(1)/4 | 055 | 0.75 | 63 | 8 | 40x40 | 43 | 34x30x55 |
| 40-160(1) A/4 | 0.55 | 0.75 | 5.5 | 6 | 40x40 | 30 | 34x30x55 |
| 40-200(1)/4 | 0.75 | 1 | 6.3 | 125 | 40x40 | 45 | 36x35x64 |
| 40-200(I) A/4 | 055 | 0.75 | 5.8 | 11 | 40x40 | 44 | 36x35x57 |
| 40-250(1)/4 | 1.5 | 2 | 63 | 20 | 40x40 | 54 | 45x43x78 |
| 40-250(I)A/4 | 1.1 | L5 | 5.8 | 17 | 40x40 | 49 | 45x36x65 |
| 50-160/4 | 0.75 | 1 | 6.3 | 8 | 50x50 | 42 | 32x30x55 |
| 50-200/4 | 0.75 | 1 | 6.3 | 125 | 50x50 | 48 | 36x35x64 |
| 50-200A/4 | 0.75 | 1 | 5.5 | 9.5 | 50x50 | 46 | 36x35x57 |
| 50-250/4 | 1.5 | 2 | 63 | 20 | 50x50 | 58 | 44x43x78 |
| 50-250A/4 | 1.1 | 15 | 5.8 | 17 | 50x50 | 50 | 44x36x65 |
| 50-125(1)/4 | 0.55 | 0.75 | 12.5 | 5 | 50x50 | 44 | 34x28x55 |
| 50-160(1)/4 | 0.55 | 0.75 | 12.5 | 8 | 50x50 | 46 | 36x31x57 |
| 50-160(I) A/4 | 055 | 0.75 | 11 | 6 | 50x50 | 44 | 36x31x57 |
| 50-200(1)/4 | 1.1 | 15 | 12.5 | 12.5 | 50x50 | 52 | 38x35x64 |
| 50-200(I) A/4 | 0.75 | 1 | 112 | 10 | 50x50 | 48 | 38x35x64 |
| 50-250(1)/4 | 22 | 3 | 12.5 | 20 | 50x50 | 73 | 46x44x79 |
| 50-250(I)A/4 | 1.5 | 2 | 11.7 | 175 | 50x50 | 65 | 46x44x79 |
| 50-250(I)B/4 | 1.1 | L5 | 10 | 13 | 50x50 | 60 | 46x44x79 |
| 50-315(1)/4 | 4 | 5.5 | 12.5 | 32 | 50x50 | 89 | 55x51x92 |
| 50-315(I)A/4 | 3 | 4 | 11.7 | 28 | 50x50 | 84 | 55x47x86 |
| 50-315(I)B/4 | 3 | 4 | 10 | 21 | 50x50 | 82 | 55x44x83 |
| 65-125/4 | 0.55 | 0.75 | 12.5 | 5 | 65x65 | 41 | 34x28x55 |
| 65-160/4 | 0.75 | 1 | 12.5 | 8 | 65x65 | 46 | 36x31x57 |
| 65-160A/4 | 055 | 0.75 | 11 | 6 | 65x65 | 35 | 36x31x57 |
| 65-200/4 | 1.1 | L5 | 12.5 | 12.5 | 65x65 | 52 | 38x35x64 |
| 65-200A/4 | 0.75 | 1 | 112 | 10 | 65x65 | 48 | 38x35x64 |
| 65-250/4 | 22 | 3 | 12.5 | 20 | 65x65 | 76 | 48x44x79 |
| 65-250A/4 | 1.5 | 2 | 11.7 | 17.5 | 65x65 | 68 | 48x44x79 |
| 65-250B/4 | 1.1 | L5 | 10 | 13 | 65x65 | 63 | 48x44x79 |
| 65-315/4 | 4 | 5.5 | 125 | 32 | 65x65 | 89 | 55x51x92 |
| 65-315A/4 | 3 | 4 | 11.7 | 28 | 65x65 | 85 | 55x47x86 |
| 65-315B/4 | 3 | 4 | 10 | 21 | 65x65 | 82 | 55x44x84 |
| 65-125(1)/4 | 0.75 | 1 | 25 | 5 | 65x65 | 49 | 40x36x66 |
| 65-160(1)/4 | 1.1 | 15 | 25 | 8 | 65x65 | 54 | 40x36x66 |
| 65-160(I) A/4 | 0.75 | 1 | 22 | 6 | 65x65 | 48 | 40x36x66 |
| 65-200(1)/4 | 22 | 3 | 25 | 12.5 | 65x65 | 71 | 45x43x80 |
| 65-200(I) A/4 | 1.5 | 2 | 233 | 11 | 65x65 | 62 | 45x43x80 |
| 65-250(1)/4 | 3 | 4 | 25 | 20 | 65x65 | 85 | 48x47x87 |
| 65-250(I) A/4 | 3 | 4 | 222 | 153 | 65x65 | 80 | 48x43x85 |
| 65-250(I)B/4 | 22 | 3 | 20 | 123 | 65x65 | 74 | 48x43x81 |
| 65-315(1)/4 | 5.5 | 7.5 | 25 | 32 | 65x65 | 120 | 58x53x100 |
| 65-315(I)A/4 | 4 | 5.5 | 22.5 | 26 | 65x65 | 110 | 58x53x100 |
| 65-315(I)B/4 | 4 | 5.5 | 20 | 21 | 65x65 | 100 | 58x53x100 |
| 80-125/4 | 0.75 | 1 | 25 | 5 | 80x80 | 48 | 40x36x66 |
| 80-160/4 | 1.5 | 2 | 25 | 8 | 80x80 | 55 | 40x36x66 |
| 80-160A/4 | 1.1 | L5 | 22 | 6 | 80x80 | 51 | 40x36x66 |
| 80-200/4 | 22 | 3 | 25 | 125 | 80x80 | 72 | 43x43x80 |
| 80-200A/4 | 1.5 | 2 | 233 | 10 | 80x80 | 64 | 43x43x80 |
| 80-250/4 | 3 | 4 | 25 | 20 | 80x80 | 89 | 48x47x87 |

| MODEL *MODELO* | Power *Potencia* | | Flow *Caudal* | Head *Altura* | DN | Wt | Dim |
|---|---|---|---|---|---|---|---|
| | kw | hp | m*/h | m | mm | 昀 | cm |
| 80-25QA/4 | 3 | 4 | 22.2 | 15.8 | 80x80 | 85 | 48x43x85 |
| 80-250B/4 | 22 | 3 | 20 | 12.8 | 80x80 | 78 | 43x43x81 |
| 80-315/4 | 5.5 | 7.5 | 25 | 32 | 80x80 | 130 | 58x53x100 |
| 80315A/4 | 4 | 5.5 | 23 | 27.9 | 80x80 | 102 | 58x53x100 |
| 80-315B/4 | 4 | 5.5 | 223 | 25 | 80x80 | 95 | S8x53xl00 |
| 80-125(1)/4 | L5 | 2 | 50 | 5 | 80x80 | 61 | 45x43x81 |
| 80-160(1)/4 | 22 | 3 | 50 | 8 | 80x80 | 82 | 50x43x84 |
| 80-160(I)A/4 | L5 | 2 | 44.7 | 6 | 80x80 | 74 | S0x43x84 |
| 80-160(I)B/4 | L5 | 2 | 43.2 | 5.8 | 80x80 | 74 | 50x43x84 |
| 80-200(1)/4 | 3 | 4 | 50 | 125 | 80x80 | 97 | 48x48x88 |
| 80-200(I)A/4 | 3 | 4 | 46.8 | 11 | 80x80 | 93 | 48x43x86 |
| 80-250(1)/4 | 5.5 | 7.5 | 50 | 20 | 80x80 | 134 | 55x52x102 |
| 80-250(1) A/4 | 4 | 5.5 | 46 | 17 | 80x80 | 106 | 55x52x102 |
| 80-250(1) B/4 | 3 | 4 | 40.5 | 13 | 80x80 | 100 | 55x52x102 |
| 80-315(1)/4 | 11 | 15 | 50 | 32 | 80x80 | 217 | 64x70x124 |
| 80-315(1) A/4 | 7.5 | 10 | 46 | 27.9 | 80x80 | 180 | 64x65x117 |
| 80-31S(I)B/4 | 5.5 | 7.5 | 40.5 | 21 | 80x80 | 166 | 64x58x108 |
| 100-125/4 | L5 | 2 | 50 | 5 | 100x100 | 70 | 44x43x81 |
| 100-160/4 | 22 | 3 | 50 | 8 | 100x100 | 87 | 50x43x84 |
| 100-160A/4 | L5 | 2 | 46 | 6 | 100x100 | 79 | 50x43x84 |
| 100-200/4 | 3 | 4 | 50 | 12.5 | 100x100 | 100 | 48x48x88 |
| 100-200A/4 | 2.2 | 3 | 44.7 | 10 | 100x100 | 90 | 4«x43x86 |
| 100-250/4 | 5.5 | 7.5 | 50 | 20 | 100x100 | 140 | 55x52x102 |
| 100-250A/4 | 4 | 5.5 | 46 | 17 | 100x100 | 112 | 55x52x102 |
| 100-250B/4 | 3 | 4 | 40.5 | 13 | 100x100 | 105 | 55x52x102 |
| 100-315/4 | 11 | 15 | 50 | 32 | 100x100 | 225 | 64x70x124 |
| 100-315A/4 | 7.5 | 10 | 46.7 | 27.9 | 100x100 | 180 | 64x64x117 |
| 100-315B/4 | 5.5 | TS | 40.5 | 21 | 100x100 | 165 | 64x58x108 |
| 100-125(1)/4 | 22 | 3 | 80 | 5 | 100x100 | 95 | 50x30x81 |
| 100-1600)/4 | 4 | 5.5 | 80 | 8 | 100x100 | 118 | 50x33x89 |
| 100*160(I)A/4 | 3 | 4 | 72 | 6 | 100x100 | 113 | 50x33x89 |
| 100-200(1)/4 | 5.5 | 7.5 | 80 | 125 | 100x100 | 14S | 54x36x97 |
| 100-20（XI)A/4 | 4 | 5.5 | 72 | 10 | 100x100 | 123 | 54x35x97 |
| 100-250(1)/4 | 11 | 15 | 100 | 20 | 100x100 | 208 | 60x44x112 |
| 100-250(I)A/4 | 7.5 | 10 | 933 | 17.4 | 100x100 | 165 | 60x36x112 |
| 100-250a）B/4 | 5.5 | 7.5 | 69 | 15 | 100x100 | 149 | 60x36x112 |
| 100-3150)/4 | 15 | 20 | 80 | 32 | 100x100 | 234 | 63x45x129 |
| 100-315(I)A/4 | 11 | 15 | 75 | 27.5 | 100x100 | 213 | 63x45x129 |
| 100-315(I)B/4 | 7.5 | 10 | 72 | 24 | 100x100 | 165 | 63x45x129 |
| 100-4000)/4 | 30 | 40 | 80 | 44 | 100x100 | 375 | 71x54x129 |
| I(X)-400(])A/4 | 22 | 30 | 75 | 44 | 100x100 | 295 | 71x54x129 |
| 100^400(I)B/4 | 18.5 | 25 | 70 | 38 | 100x100 | 257 | 71x54x129 |
| 125-125/4 | 22 | 3 | 100 | 5 | 125x125 | 148 | 52x43x84 |
| 125-160/4 | 3 | 4 | 80 | 8 | 125x125 | 205 | 52x46x92 |
| 125-160A/4 | 2.2 | 3 | 69.3 | 6 | 125x125 | 165 | 52x43x89 |
| 125-200/4 | 5.5 | 7.5 | 80 | 125 | 125x125 | 249 | 54x51x104 |
| 125-200A/4 | 4 | 5.5 | 75 | 11 | 125x125 | 237 | 54x51x104 |
| 125-250/4 | 11 | 15 | 100 | 20 | 125x125 | 220 | 68x66x118 |
| 125-250A/4 | 7.5 | 10 | 933 | 17.4 | 125x125 | 210 | 68x57x108 |
| 125-250B/4 | 5.5 | 7.5 | 87 | 15 | 125x125 | 195 | 68x51x105 |
| 125-315/4 | 15 | 20 | 100 | 32 | 125x125 | 300 | 68x69x135 |

## TECHNICAL DATA / *DATOS T^CNICOS*

**60 HZ n=17501/min**

| MODEL *MODELO* | Power *Potencia* | | Flow *Caudal* | Head *Altura* | DN | Wt | Dim |
|---|---|---|---|---|---|---|---|
| | kw | hp | m³/h | m | mm | 呻 | cm |
| 125-315A/4 | 11 | 15 | 95 | 27 | 125x125 | 282 | 68x69x135 |
| 125-315B/4 | 11 | 15 | 87 | 24 | 125x125 | 245 | 68x69x135 |
| 125-400/4 | 30 | 40 | 100 | 50 | 125x125 | 375 | 71x54x105 |
| 125-400A/4 | 22 | 30 | 94 | 44 | 125x125 | 295 | 71x54x105 |
| 125-400B/4 | 18.5 | 25 | 87 | 37.5 | 125x125 | 257 | 71x54x100 |
| 125-200(1)/4 | 11 | 15 | 200 | 12.5 | 125x125 | 244 | 68x44x64 |
| 125-200(I)A/4 | 7.5 | 10 | 179 | 10 | 125x125 | 210 | 68x42x62 |
| 125-250(1)/4 | 15 | 20 | 200 | 20 | 125x125 | 265 | 68x42x91 |
| 125-250(I)A/4 | 11 | 15 | 184.4 | 17 | 125x125 | 241 | 68x42x91 |
| 125-250(I)B/4 | 7.5 | 10 | 167 | 14 | 125x125 | 210 | 68x42x85 |
| 125-315(1)/4 | 22 | 30 | 200 | 32 | 125x125 | 335 | 74x47x98 |
| 125-315(I)A/4 | 18.5 | 25 | 187 | 28 | 125x125 | 315 | 74x44x95 |
| 125>31S(I)BZ4 | 15 | 20 | 173 | 24 | 125x125 | 265 | 74x44x95 |
| 125-400(1)/4 | 45 | 60 | 200 | 50 | 125x125 | 490 | 78x57x107 |
| 12 5-400(1) A/4 | 37 | 50 | 187 | 44 | 125x125 | 454 | 78x56x105 |
| 125-400(I)B/4 | 30 | 40 | 160 | 38 | 125x125 | 435 | 78x56x105 |
| 150-200/4 | 15 | 20 | 200 | 125 | 150x150 | 265 | 68x44x93 |
| 150-200A/4 | 11 | 15 | 179 | 10 | 150x150 | 244 | 68x44x89 |
| 150-250/4 | 18.5 | 25 | 200 | 20 | 150x150 | 300 | 70x48x96 |
| 150-25QA/4 | 15 | 20 | 184.4 | 17 | 150x150 | 262 | 70x48x94 |
| 150-250B/4 | 11 | 15 | 167 | 14 | 150x150 | 241 | 70x45x90 |
| 150-315/4 | 30 | 40 | 200 | 32 | 150x150 | 410 | 76x53x108 |
| 150<315A/4 | 22 | 30 | 187 | 28 | 150x150 | 335 | 76x51x100 |
| 150<315B/4 | 18.5 | 25 | 173 | 24 | 150x150 | 315 | 76x51x96 |
| 150-400/4 | 45 | 60 | 200 | 50 | 150x150 | 490 | 80x60x112 |
| 150400A/4 | 37 | 50 | 187 | 44 | 150x150 | 454 | 80x60x110 |
| 150-400B/4 | 30 | 40 | 174 | 38 | 150x150 | 435 | 80x56x108 |
| 150-400C/4 | 22 | 30 | 160 | 32 | 150x150 | 365 | 80x54x100 |
| 150-2000)/4 | 15 | 20 | 200 | 12.5 | 150x150 | 265 | 68x44x93 |
| 150-200(1) A/4 | 11 | 15 | 179 | 10 | 150x150 | 244 | 68x44x89 |
| 150-250(1)/4 | 18.5 | 25 | 200 | 20 | 150x150 | 305 | 75x48x96 |
| 150-250(I)A/4 | 15 | 20 | 187 | 17.5 | 150x150 | 267 | 75x48x94 |
| 150-250(I)B/4 | 11 | 15 | 173 | 14 | 150x150 | 246 | 75x45x90 |
| 150-315(1)/4 | 30 | 40 | 200 | 32 | 150x150 | 417 | 80x53x108 |
| 150-315(I)A/4 | 22 | 30 | 187 | 28 | 150x150 | 342 | 80x51x100 |
| 150-315(I)B/4 | 18.5 | 25 | 173 | 24 | 150x150 | 322 | 80x51x96 |
| 150-400(1)/4 | 45 | 60 | 200 | 50 | 150x150 | 498 | 86x60x112 |
| 150-400(I)A/4 | 37 | 50 | 187 | 44 | 150x150 | 462 | 86x60x110 |
| 150-400(I)B/4 | 30 | 40 | 173 | 37.5 | 150x150 | 443 | 86x56x108 |
| 150-400(I)C/4 | 22 | 30 | 160 | 32 | 150x150 | 373 | 86x54x100 |
| 200-200/4 | 15 | 20 | 200 | 125 | 200x200 | 265 | 68x44x93 |
| 200-200A/4 | 11 | 15 | 179 | 10 | 200x200 | 244 | 68x44x89 |
| 200-250/4 | 18.5 | 25 | 200 | 20 | 200x200 | 305 | 75x48x96 |
| 200-250A/4 | 15 | 20 | 184.4 | 17 | 200x200 | 267 | 75x48x94 |
| 200-250B/4 | 11 | 15 | 179 | 14 | 200x200 | 246 | 75x45x90 |
| 200-315/4 | 30 | 40 | 200 | 32 | 200x200 | 417 | 80x53x108 |
| 200>315A/4 | 22 | 30 | 187 | 28 | 200x200 | 342 | 80x51x100 |
| 200-315B/4 | 18.5 | 25 | 173 | 24 | 200x200 | 322 | 80x51x96 |
| 200-400/4 | 45 | 60 | 200 | 50 | 200x200 | 498 | 86x60x112 |

| MODEL *MODELO* | Power *Potencia* | | Flow *Caudal* | Head *Altura* | DN | Wt | Dim |
|---|---|---|---|---|---|---|---|
| | kw | hp | m^/h | m | mm | 句 | cm |
| 200-40QA/4 | 37 | 50 | 187 | 44 | 200x200 | 462 | 86x60x110 |
| 200-400B/4 | 30 | 40 | 174 | 38 | 200x200 | 443 | 86x56x108 |
| 200-400C/4 | 22 | 30 | 160 | 32 | 200x200 | 373 | 86x54x100 |
| 200-200(1)/4 | 22 | 30 | 400 | 125 | 200x200 | 382 | 81x53x103 |
| 200-200(1) A/4 | 18.5 | 25 | 358 | 10 | 200x200 | 346 | 81x53x97 |
| 200-250(1)/4 | 30 | 40 | 400 | 20 | 200x200 | 475 | 83x53x111 |
| 200-250(1) A/4 | 22 | 30 | 358 | 16 | 200x200 | 405 | 83x51x104 |
| 200-250(I)B/4 | 18.5 | 25 | 322 | 13 | 200x200 | 387 | 83x51x100 |
| 200-315(1)/4 | 55 | 75 | 400 | 32 | 200x200 | 675 | 86x65x127 |
| 200-315(1) A/4 | 45 | 60 | 374 | 28 | 200x200 | 560 | 86x63x118 |
| 200-315(I)B/4 | 37 | 50 | 346 | 24 | 200x200 | 535 | 86x63x115 |
| 200-400(1)/4 | 75 | 100 | 400 | 50 | 200x200 | 830 | 88x70x134 |
| 200-400(1) A/4 | 75 | 100 | 374 | 44 | 200x200 | 830 | 88x70x134 |
| 200-400(I)B/4 | 55 | 75 | M6 | 38 | 200x200 | 685 | 88x64x127 |
| 200-400(I)C/4 | 45 | 60 | 320 | 32 | 200x200 | 580 | 88x60x119 |
| 250<250/4 | 45 | 60 | 550 | 20 | 250x250 | 620 | 111x55x115 |
| 250-25QA/4 | 37 | 50 | 500 | 17 | 250x250 | 550 | 111x55x115 |
| 250-315/4 | 75 | 100 | 550 | 32 | 250x250 | 890 | 111x64x135 |
| 250-315A/4 | 55 | 75 | 500 | 28 | 250x250 | 690 | 111x64x135 |
| 250-315B/4 | 45 | 60 | 450 | 24 | 250x250 | 620 | 111x64x135 |
| 250-400/4 | 110 | 150 | 500 | 50 | 250x250 | 1530 | 120x90x156 |
| 250-40QA/4 | 90 | 120 | 500 | 44 | 250x250 | 1320 | 120x90x146 |
| 250-400B/4 | 75 | 100 | 450 | 38 | 250x250 | 950 | 120x90x136 |
| 250-500/4 | 200 | 270 | 550 | 80 | 250x250 | 2000 | 130x90x192 |
| 250-500A/4 | 160 | 215 | 506 | 71 | 250x250 | 1850 | 130x90x173 |
| 250-500B/4 | 132 | 176 | 466 | 63.5 | 250x250 | 1750 | 130x90x169 |
| 300-250/4 | 55 | 75 | 720 | 20 | 300x300 | 690 | 125x60x151 |
| 300-250A/4 | 45 | 60 | 600 | 17 | 300x300 | 620 | 125x60x142 |
| 300-315/4 | 90 | 120 | 720 | 32 | 300x300 | 1320 | 100x67x153 |
| 300-315A/4 | 75 | 100 | 650 | 28 | 300x300 | 950 | 100x67x148 |
| 300-315B/4 | 55 | 75 | 580 | 24 | 300x300 | 750 | 100x67x148 |
| 300-400/4 | 110 | 150 | 720 | 50 | 300x300 | 1530 | 150x67x177 |
| 300-400A/4 | 110 | 150 | 637 | 44 | 300x300 | 1530 | 150x67x173 |
| 300-400 B/4 | 90 | 120 | 563 | 38 | 300x300 | 1320 | 150x67x170 |
| 300-400C/4 | 75 | 100 | 561 | 33 | 300x300 | 950 | 150x67x153 |
| 300-500/4 | 250 | 335 | 720 | 80 | 300x300 | 2300 | 150x90x196 |
| 300-500A/4 | 200 | 270 | 675 | 70 | 300x300 | 2000 | 150x90x196 |
| 300-500B/4 | 160 | 215 | 625 | 60 | 300x300 | 1850 | 150x90x196 |
| 350-315/4 | 90 | 120 | 800 | 32 | 350x350 | 1650 | 130x68x140 |
| 350-315A/4 | 75 | 100 | 1080 | 17 | 350x350 | 1250 | 130x68x140 |
| 350-400/4 | 160 | 215 | 800 | 50 | 350x350 | 1950 | 130x68x182 |
| 350-400A/4 | 132 | 176 | 1080 | 28 | 350x350 | 1750 | 130x68x172 |
| 350-315(1)/4 | 160 | 215 | 1200 | 32 | 350x350 | 1950 | 130x68x182 |
| 350-315(1) A/4 | 132 | 176 | 1092 | 28 | 350x350 | 1750 | 130x68x172 |
| 350-315(I)B/4 | 110 | 150 | 994 | 25 | 350x350 | 1530 | 130x68x162 |
| 350-400(1)/4 | 250 | 335 | 1200 | 50 | 350x350 | 2300 | 130x68x182 |
| 350-400(I) A/4 | 250 | 335 | 1092 | 44 | 350x350 | 2300 | 130x68x182 |
| 350-400(I)B/4 | 200 | 270 | 994 | 385 | 350x350 | 2000 | 130x68x172 |

## MATERIAL DESCRIPTION / *DESCRIPCKiN DE MATERIAL*

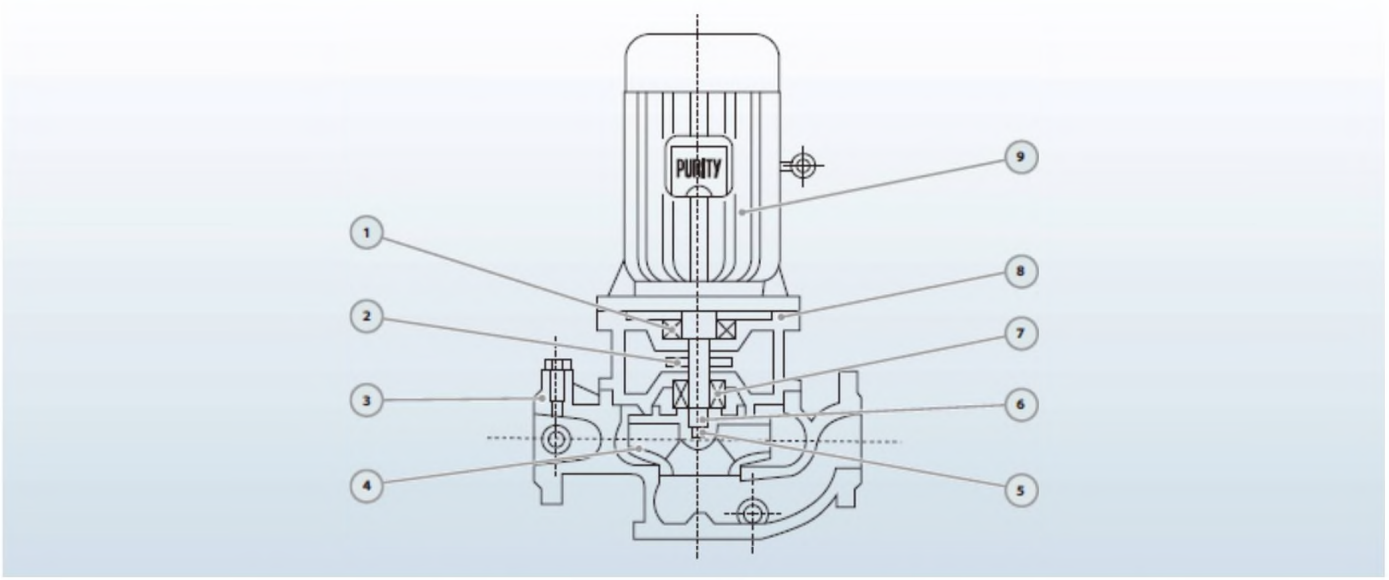


| No. | Description<br>Descripción | Material<br>M aterial | No. | Description<br>Oexcmciwi | Material<br>Material | No. | Description<br>QA&UWUÖJk | Material<br>M arena/ |
|---|---|---|---|---|---|---|---|---|
| 1 | Bearing<br>Rodamiento | Ball Bearing<br>Bola RodAmj&nio. | 4 | Impeller<br>Impulsor | SS304/Cast iron<br>laax304/fM0dWÄ | 7 | Mechanical Seal<br>GieaR MsGsmiGQ. | SiQ/Carbon/SS304<br>SiC-Graffto-Inox304 |
| 2 | Water Deflector<br>Deflector | Rubber<br>Caucho | 5 | Impeller Nut<br>IuCJ£Ade toyuUsc*/; | GAlmizdied Steel<br>AQgfP.以加收 ado | 8 | Connection<br>Conexión■- | Cast iron<br>Fundición |
| 3 | Pump Case<br>(Xufigw de Bomba | Cast iron<br>^JUUIXJÖJI | 6 | Shaft<br>eje. | SS 30 4/45# Steel<br>IflQ/ 304/45^ Hierro | 9 | Motor<br>Motor | IP55 Class F<br>IP55 QlassiF |

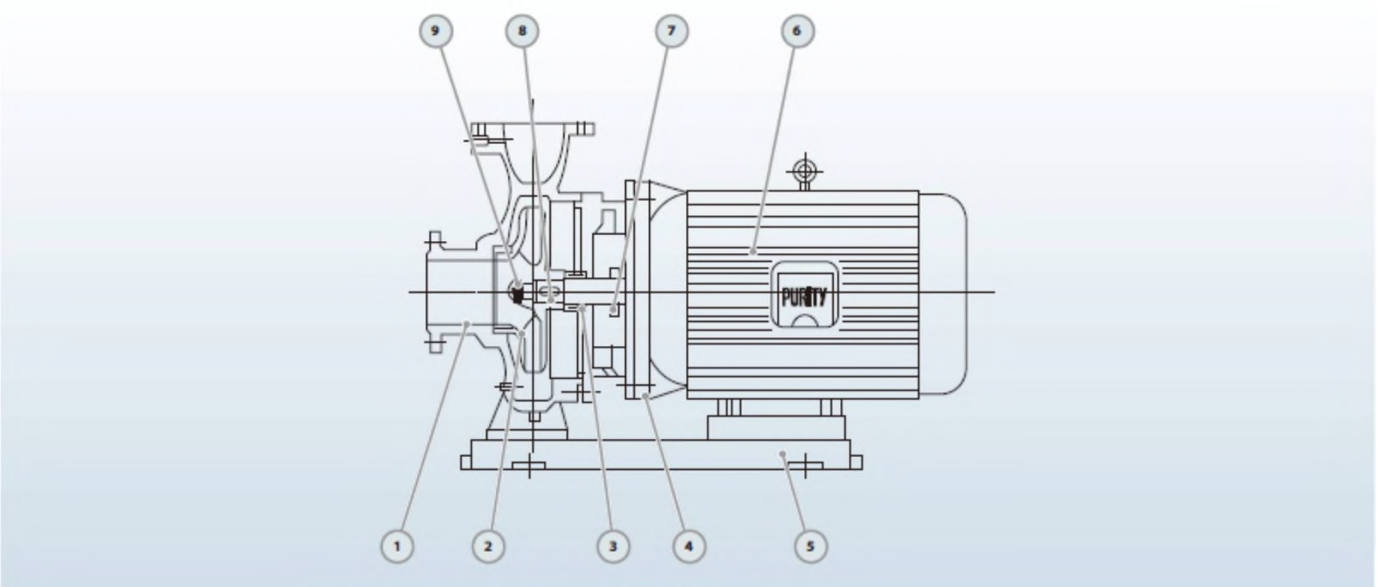


| No. | Description<br>UeAGWGÜUk | Material<br>Material | No. | Description<br>Ue^cjwjdiuk | Material<br>Material | No. | Description<br>[U&uwoöjk | Material<br>M arena/ |
|---|---|---|---|---|---|---|---|---|
| 1 | Pump Case<br>GuRcpade Bomba | Cast iron<br>Fundición | 4 | Connection<br>Conexión | Cast iron<br>Fundición | 7 | Water Deflector<br>Deflector | Rubber<br>Caucto- |
| 2 | Impeller<br>Impulsor | SS304/Cast iron<br>taOX3040adiQ4Qtt | 5 | Base<br>Base | Cast iron<br>Fundición | 8 | Shaft<br>鈔 | SS304/45# Steel<br>toflX 304/45# ttoQ |
| 3 | Mechanical Seal<br>Cierre Mecánico | SiQCarbon/SS304<br>SiC-Grafito-Inox304 | 6 | Motor<br>Motor | IP55 Class F<br>/P55QaS£F | 9 | Impeller Key<br>Chaveta Impulsor | Iron<br>Hierro |

# Horizontal Water Pumps PZ

## PZ

### TECHNICAL DESCRIPTION

- New stainless steel standard pump
- Original design by PURITY
- Both square motor & round motor available

-YE3 high efficient motor, with protection IP55 class F

• Pump case in stainless steel AISI 304

- Impeller in stainless steel AISI 304
- Shaft in stainless steel AISI 304
- Quality NSK bearing, wear resistance mechanical seal

# Product Specification (50HZ)


**NEW/NUEVO**

## TECHNICAL DESCRIPTION

■ New stainless steel standard pump
-Original design by PURITY
■ Both square motor & round motor available
-YE3 high efficient motor, with protection IP55 class F
■ Pump case in stainless steel AISI 304
■ Impeller in stainless steel AISI 304
■ Shaft in stainless steel AISI 304
• Quality NSK bearing, wear resistance mechanical seal

## USING LIMITS

-Liquid temperature between -10°C and +120°C
■ Ambient temperature up to +50°C
■ Max. working pressure 16 bar
■ Continuous service S1

## APPLICATIONS

■ Used for: water supply, cleaning sets, pressure boosting, firefighting sets, irrigation, industrial applications, water circulation in climatisation sets, agricultural applications.
■ Suitable for use with clean, aggressive liquids that are chemically compatible with the materials from which the pump is made.
■ The pumps must be installed in enclosed places, or at least protected against inclement weather.

## TECHNICAL DATA/DATOS TECNICOS

**50HZ n=2900 l/min**

| MODEL NfODELO | Power Potencia | | L/min | Q=DELIVERY / CAUDAL | | | | | | | | | | | | | | | | | | | | DN |
|---|---|---|---|---|---|---|---|---|---|---|---|---|---|---|---|---|---|---|---|---|---|---|---|---|
| | | | | 0 | 150 | 200 | 300 | 333 | 400 | 600 | 700 | 900 | 1200 | 1900 | 2100 | 2200 | 2300 | 2500 | 3400 | 3600 | 3800 | 4000 | | |
| | kw | hp | m³/h | 0 | 9 | 12 | 18 | 20 | 24 | 36 | 42 | 54 | 72 | 114 | 126 | 132 | 138 | 150 | 204 | 216 | 228 | 240 | | mm |
| **32-160/11** | 1.1 | 1.5 | | 22.5 | 19.9 | 18.4 | 14.1 | 12 | | | | | | | | | | | | | | | | 50x32 |
| **32-160/15** | 1.5 | 2 | | 29.5 | 26.5 | 24.5 | 19.2 | 17 | | | | | | | | | | | | | | | | 50x32 |
| **32-160/22** | 2.2 | 3 | | 37 | 34 | 32 | 27 | 25 | | | | | | | | | | | | | | | | 50x32 |
| **32-200/30** | 3 | 4 | | 44 | 40 | 37.5 | 31 | 28 | | | | | | | | | | | | | | | | 50x32 |
| **32-200/40** | 4 | 5.5 | | 55 | 52 | 49.5 | 43.5 | 40.5 | 37 | | | | | | | | | | | | | | | 50x32 |
| **32-200/55** | 5.5 | 7.5 | | 70.5 | 67.5 | 65 | 58.5 | 55 | 51 | | | | | | | | | | | | | | | 50x32 |
| **40-125/15** | 1.5 | 2 | | 20 | | 19 | 17.6 | 17 | 15.7 | 10.3 | 7 | | | | | | | | | | | | | 65x40 |
| **40-125/22** | 2.2 | 3 | | 26.5 | | 25.5 | 24 | 23.5 | 22 | 16.4 | 13 | | | | | | | | | | | | | 65x40 |
| **40-160/30** | 3 | 4 | | 31 | | 29.5 | 27.5 | 27 | 25.5 | 20 | 17 | | | | | | | | | | | | | 65x40 |
| **40-160/40** | 4 | 5.5 | | 40 | | 38.5 | 37 | 36 | 34.5 | 29 | 25.5 | | | | | | | | | | | | | 65x40 |
| **40-200/55** | 5.5 | 7.5 | | 47 | | 45.5 | 44 | 43 | 41 | 35 | 31 | | | | | | | | | | | | | 65x40 |
| **40-200/75** | 7.5 | 10 | | 58 | | 57 | 55.5 | 55 | 53.5 | 47.5 | 44 | | | | | | | | | | | | | 65x40 |
| **40-200/110** | 11 | 15 | | 72 | | 71 | 70 | 70 | 68.5 | 63 | 59 | | | | | | | | | | | | | 65x40 |
| **50-125/22** | 2.2 | 3 | | 19 | | | | | 17.5 | 14.9 | 13.4 | 10.7 | | | | | | | | | | | | 65x50 |
| **50-125/30** | 3 | 4 | | 22 | | | | | 20.5 | 18.4 | 17 | 14.4 | 8 | | | | | | | | | | | 65x50 |
| **50125/40** | 4 | 5.5 | | 26.5 | | | | | 26 | 24 | 22.5 | 20.5 | 14 | | | | | | | | | | | 65x50 |
| **50-160/55** | 5.5 | 7.5 | | 33 | | | | | 31 | 28.5 | 27 | 24.5 | 18 | | | | | | | | | | | 65x50 |
| **50-160/75** | 7.5 | 10 | **H(m)** | 40 | | | | | 38.5 | 36 | 35 | 32.5 | 26 | | | | | | | | | | | 65x50 |
| **50-200/92** | 9.2 | 12.5 | | 53 | | | | | | 49 | 47.5 | 44.5 | 34 | | | | | | | | | | | 65x50 |
| **50-200/110** | 11 | 15 | | 59 | | | | | | 55 | 54 | 51 | 42 | | | | | | | | | | | 65x50 |
| **50-200/150** | 15 | 20 | | 72 | | | | | | 69 | 68 | 65 | 57 | | | | | | | | | | | 65x50 |
| **65-125/40** | 4 | 5.5 | | 22.2 | | | | | | 19.8 | 19 | 17.3 | 13.5 | 6.3 | | | | | | | | | | 80x65 |
| **65-125/55** | 5.5 | 7.5 | | 27 | | | | | | | 24 | 22.2 | 18.5 | 10.8 | 8 | | | | | | | | | 80x65 |
| **65-125/75** | 7.5 | 10 | | 32 | | | | | | | 29.5 | 27.8 | 24 | 16.1 | 13.4 | 12 | | | | | | | | 80x65 |
| **65-160/92** | 9.2 | 12.5 | | 36.5 | | | | | | | 34.5 | 32.8 | 29 | 21.1 | 18.3 | 16.8 | | | | | | | | 80x65 |
| **65-160/110** | 11 | 15 | | 40.5 | | | | | | | 38.5 | 37.1 | 33.5 | 25.8 | 23 | 21.5 | 20 | | | | | | | 80x65 |
| **65-160/150** | 15 | 20 | | 48 | | | | | | | 45.5 | 44 | 40.5 | 32.6 | 29.6 | 28 | 26.5 | | | | | | | 80x65 |
| **65-200/150** | 15 | 20 | | 53.5 | | | | | | | 51 | 49 | 44.5 | 35.3 | 31.8 | 30 | | | | | | | | 80x65 |
| **65-200/185** | 18.5 | 25 | | 60.5 | | | | | | | 58.5 | 56.5 | 52 | 43 | 39.7 | 38 | 36.3 | | | | | | | 80x65 |
| **65-200/220** | 22 | 30 | | 67 | | | | | | | 65.5 | 64 | 60 | 51 | 48 | 46.5 | 45 | | | | | | | 80x65 |
| **80-160/110** | 11 | 15 | | 29 | | | | | | | | | 27.5 | 24.2 | 23 | 22.4 | 21.8 | 20.4 | 12.5 | | | | | 100x80 |
| **80-160/150** | 15 | 20 | | 35 | | | | | | | | | 34.5 | 31.5 | 30.5 | 30 | 29.4 | 28.1 | 21 | 19.1 | 17 | | | 100x80 |
| **80-160/185** | 18.5 | 25 | | 40 | | | | | | | | | 39.5 | 36.7 | 35.7 | 35.2 | 34.7 | 33.5 | 26.4 | 24.4 | 22.3 | 20 | | 100x80 |
| **80-200/220** | 22 | 30 | | 50 | | | | | | | | | 48.5 | 44.5 | 43 | 42 | 41 | 39 | 27.8 | 25 | | | | 100x80 |
| **80-200/300** | 30 | 40 | | 60 | | | | | | | | | 59 | 56 | 54.5 | 54 | 53 | 51 | 41.5 | 39 | 36.1 | 33 | | 100x80 |

## PERFORMANCE CURVE / *CURVAS DE FUNCIONAMIENTO*

**50 Hz n=2900 1 /min**

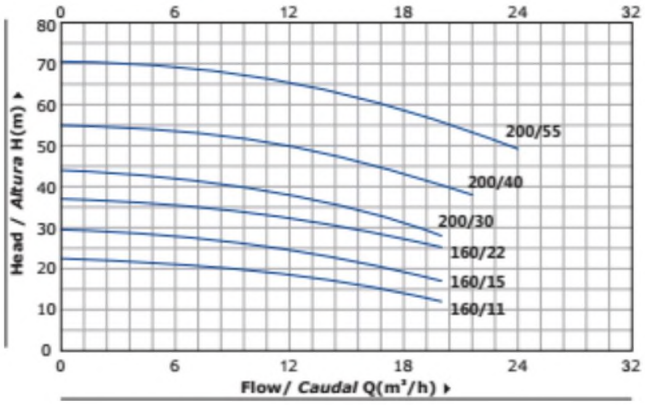


**PZ 32**

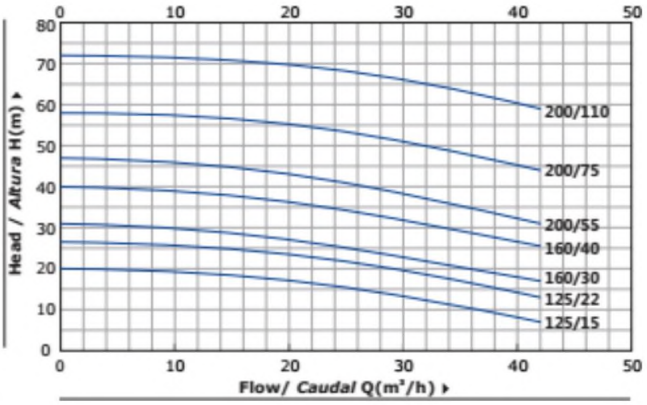


**PZ 40**

50 Hz n=29001/min

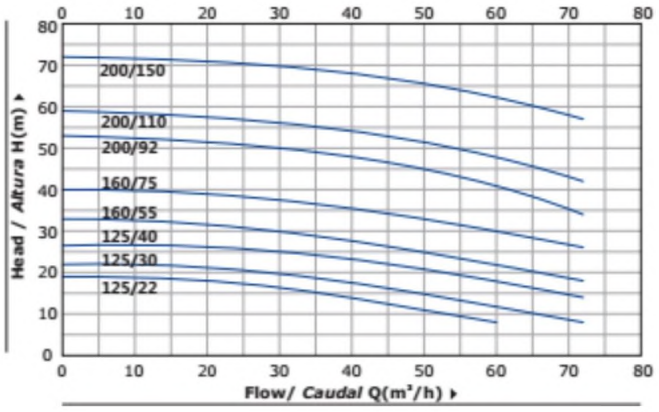


PZ 50

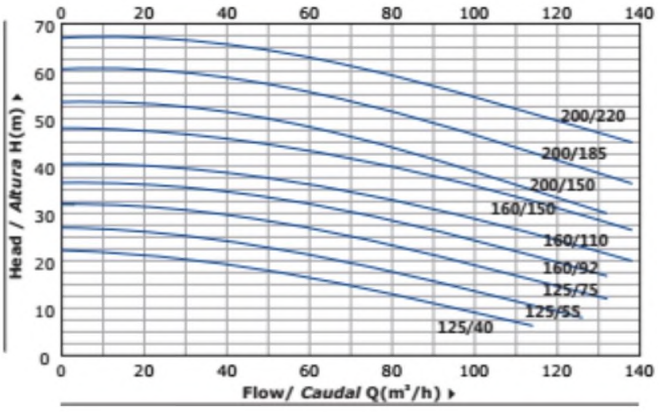


PZ 65

## MATERIAL DESCRIPTION / *DESCRIPCIbN DE MATERIAL*

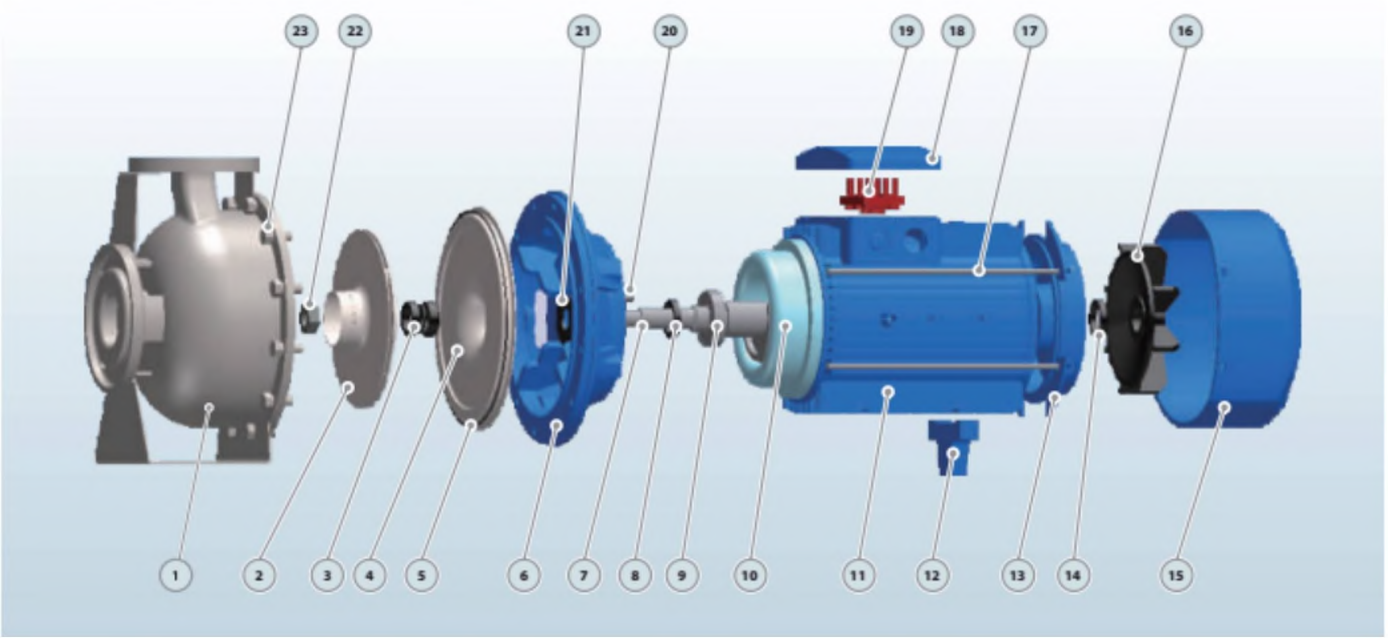


| No. | Description<br>*Descripción* | Material<br>Marenal | No* | Description<br>*Descripción* | Material<br>***Mat&riaJ*** | *No.* | Description<br>Descripción | Material<br>***Material*** |
|---|---|---|---|---|---|---|---|---|
| 1 | Pump Case<br>*Cuerpo de Bomba* | SS304<br>*In ox 304* | 9 | Bearing<br>*Rodamiento* | Ball Bearing<br>*Bold Rodamiento* | 17 | Through Bolt<br>*Pemo* | Steel<br>*Acero* |
| 2 | Impeller<br>*Impufsor* | SS304<br>*Inox 304* | 10 | Wound Stator/Rotor<br>*Estator/Rotor* | Silicon Steel'Copper<br>*Acero al SHicio/Cobre* | 18 | Terminal Box<br>*Caja de Bomes* | Aluminum<br>*Aluminio* |
| 3 | Mechanical Seal<br>*Cierre Mecánico* | SiC/Carbon/SS304<br>*SiC-Grafito-Inox304* | 11 | Motor Case<br>*Cuerpo de Motor* | Aluminum<br>*Aluminio* | 19 | *Terminal Board*<br>*Tablero de Bomes* | Plastic<br>*Plástico* |
| 4 | Baffle Plate<br>*Place de bafle* | SS304<br>*Inox 304* | 12 | Support Foot<br>*Soporte Pie* | Plastic<br>*Plástico* | 20 | Impeller Key<br>*Chaveta Imputsor* | Iron<br>*Hierro* |
| 5 | O-ring<br>*Junta Tóries* | *Rubber*<br>*Caucho* | 13 | Back Cover<br>*Tapa Trasera* | Cast iron<br>*Fundición* | 21 | Water Deflector<br>*Deflector* | Rubber<br>*Caucho* |
| 6 | Connection<br>*Conexión* | Cast iron<br>*Fundición* | 14 | Reinforced Seal<br>*Seilo Reforzado* | Rubber<br>*Caucho* | 22 | Impeller Nut<br>*Tuerca de tmpulsor* | Gatvanizated Steel<br>*Acero Galvanizado* |
| 7 | Shaft<br>*Eje* | SS304<br>*In ox 304* | 15 | Fan Cover<br>*Tapa VentUador* | Aluminum<br>*Aluminio* | 23 | Connection Bolt<br>*Pemo* | Steel<br>*Acero* |
| 8 | Reinforced Seal<br>*Setto Reforzado* | Rubber<br>*Caucho* | 16 | Fan<br>*Ventiador* | Plastic<br>*Plástico* | | | |

SO Hz n=29001/min

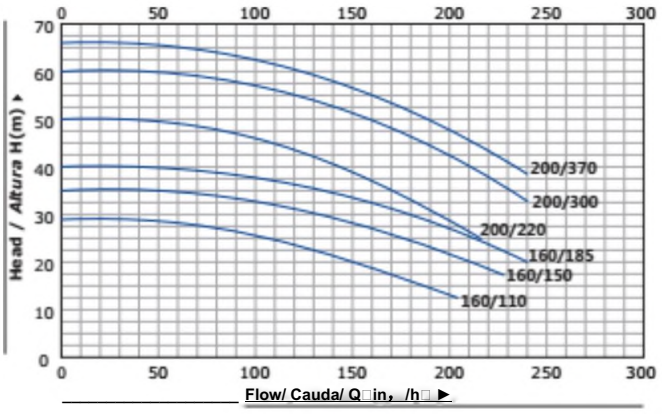


## PZ 80

### DIMENSIONS AND WEIGHT / *DIMENSIONES YPESOS*

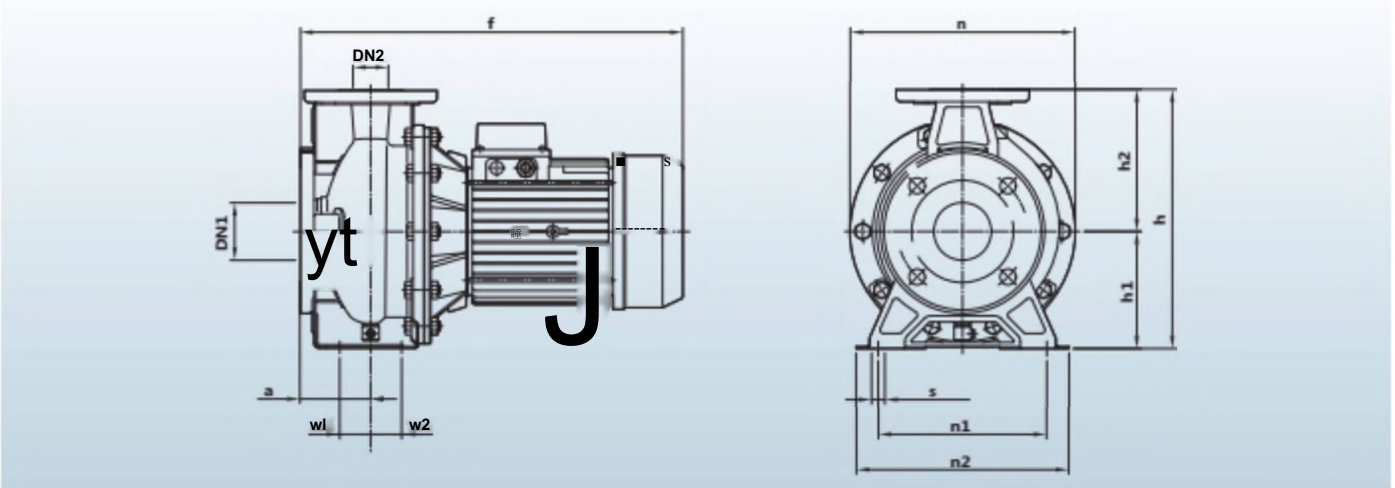

# Product Specification (60HZ)


**NEW/NUEVO**

TECHNICAL DESCRIPTION
■ New stainless steel standard pump
-Original design by PURITY
■ Both square motor & round motor available
-YE3 high efficient motor, with protection IP55 class F
■ Pump case in stainless steel AISI 304
■ Impeller in stainless steel AISI 304
■ Shaft in stainless steel AISI 304
• Quality NSK bearing, wear resistance mechanical seal

USING LIMITS
-Liquid temperature between -10°C and +120°C
■ Ambient temperature up to +50°C
■ Max. working pressure 16 bar
■ Continuous service S1

APPLICATIONS
■ Used for: water supply, cleaning sets, pressure boosting, firefighting sets, irrigation, industrial applications, water circulation in climatisation sets, agricultural applications.
■ Suitable for use with clean, aggressive liquids that are chemically compatible with the materials from which the pump is made.
■ The pumps must be installed in enclosed places, or at least protected against inclement weather.

## TECHNICAL DATA/DATOS TECNICOS

**50HZ n=2900 l/min**

| MODEL NfODELO | Power Potencia | | L/min | Q=DELIVERY / CAUDAL | | | | | | | | | | | | | | | | | | | | DN |
|---|---|---|---|---|---|---|---|---|---|---|---|---|---|---|---|---|---|---|---|---|---|---|---|---|
| | | | | 0 | 150 | 200 | 300 | 333 | 400 | 600 | 700 | 900 | 1200 | 1900 | 2100 | 2200 | 2300 | 2500 | 3400 | 3600 | 3800 | 4000 | | |
| | kw | hp | m³/h | 0 | 9 | 12 | 18 | 20 | 24 | 36 | 42 | 54 | 72 | 114 | 126 | 132 | 138 | 150 | 204 | 216 | 228 | 240 | | mm |
| **32-160/11** | 1.1 | 1.5 | | 22.5 | 19.9 | 18.4 | 14.1 | 12 | | | | | | | | | | | | | | | | 50x32 |
| **32-160/15** | 1.5 | 2 | | 29.5 | 26.5 | 24.5 | 19.2 | 17 | | | | | | | | | | | | | | | | 50x32 |
| **32-160/22** | 2.2 | 3 | | 37 | 34 | 32 | 27 | 25 | | | | | | | | | | | | | | | | 50x32 |
| **32-200/30** | 3 | 4 | | 44 | 40 | 37.5 | 31 | 28 | | | | | | | | | | | | | | | | 50x32 |
| **32-200/40** | 4 | 5.5 | | 55 | 52 | 49.5 | 43.5 | 40.5 | 37 | | | | | | | | | | | | | | | 50x32 |
| **32-200/55** | 5.5 | 7.5 | | 70.5 | 67.5 | 65 | 58.5 | 55 | 51 | | | | | | | | | | | | | | | 50x32 |
| **40-125/15** | 1.5 | 2 | | 20 | | 19 | 17.6 | 17 | 15.7 | 10.3 | 7 | | | | | | | | | | | | | 65x40 |
| **40-125/22** | 2.2 | 3 | | 26.5 | | 25.5 | 24 | 23.5 | 22 | 16.4 | 13 | | | | | | | | | | | | | 65x40 |
| **40-160/30** | 3 | 4 | | 31 | | 29.5 | 27.5 | 27 | 25.5 | 20 | 17 | | | | | | | | | | | | | 65x40 |
| **40-160/40** | 4 | 5.5 | | 40 | | 38.5 | 37 | 36 | 34.5 | 29 | 25.5 | | | | | | | | | | | | | 65x40 |
| **40-200/55** | 5.5 | 7.5 | | 47 | | 45.5 | 44 | 43 | 41 | 35 | 31 | | | | | | | | | | | | | 65x40 |
| **40-200/75** | 7.5 | 10 | | 58 | | 57 | 55.5 | 55 | 53.5 | 47.5 | 44 | | | | | | | | | | | | | 65x40 |
| **40-200/110** | 11 | 15 | | 72 | | 71 | 70 | 70 | 68.5 | 63 | 59 | | | | | | | | | | | | | 65x40 |
| **50-125/22** | 2.2 | 3 | | 19 | | | | | 17.5 | 14.9 | 13.4 | 10.7 | | | | | | | | | | | | 65x50 |
| **50-125/30** | 3 | 4 | | 22 | | | | | 20.5 | 18.4 | 17 | 14.4 | 8 | | | | | | | | | | | 65x50 |
| **50125/40** | 4 | 5.5 | | 26.5 | | | | | 26 | 24 | 22.5 | 20.5 | 14 | | | | | | | | | | | 65x50 |
| **50-160/55** | 5.5 | 7.5 | | 33 | | | | | 31 | 28.5 | 27 | 24.5 | 18 | | | | | | | | | | | 65x50 |
| **50-160/75** | 7.5 | 10 | **H(m)** | 40 | | | | | 38.5 | 36 | 35 | 32.5 | 26 | | | | | | | | | | | 65x50 |
| **50-200/92** | 9.2 | 12.5 | | 53 | | | | | | 49 | 47.5 | 44.5 | 34 | | | | | | | | | | | 65x50 |
| **50-200/110** | 11 | 15 | | 59 | | | | | | 55 | 54 | 51 | 42 | | | | | | | | | | | 65x50 |
| **50-200/150** | 15 | 20 | | 72 | | | | | | 69 | 68 | 65 | 57 | | | | | | | | | | | 65x50 |
| **65-125/40** | 4 | 5.5 | | 22.2 | | | | | | 19.8 | 19 | 17.3 | 13.5 | 6.3 | | | | | | | | | | 80x65 |
| **65-125/55** | 5.5 | 7.5 | | 27 | | | | | | | 24 | 22.2 | 18.5 | 10.8 | 8 | | | | | | | | | 80x65 |
| **65-125/75** | 7.5 | 10 | | 32 | | | | | | | 29.5 | 27.8 | 24 | 16.1 | 13.4 | 12 | | | | | | | | 80x65 |
| **65-160/92** | 9.2 | 12.5 | | 36.5 | | | | | | | 34.5 | 32.8 | 29 | 21.1 | 18.3 | 16.8 | | | | | | | | 80x65 |
| **65-160/110** | 11 | 15 | | 40.5 | | | | | | | 38.5 | 37.1 | 33.5 | 25.8 | 23 | 21.5 | 20 | | | | | | | 80x65 |
| **65-160/150** | 15 | 20 | | 48 | | | | | | | 45.5 | 44 | 40.5 | 32.6 | 29.6 | 28 | 26.5 | | | | | | | 80x65 |
| **65-200/150** | 15 | 20 | | 53.5 | | | | | | | 51 | 49 | 44.5 | 35.3 | 31.8 | 30 | | | | | | | | 80x65 |
| **65-200/185** | 18.5 | 25 | | 60.5 | | | | | | | 58.5 | 56.5 | 52 | 43 | 39.7 | 38 | 36.3 | | | | | | | 80x65 |
| **65-200/220** | 22 | 30 | | 67 | | | | | | | 65.5 | 64 | 60 | 51 | 48 | 46.5 | 45 | | | | | | | 80x65 |
| **80-160/110** | 11 | 15 | | 29 | | | | | | | | | 27.5 | 24.2 | 23 | 22.4 | 21.8 | 20.4 | 12.5 | | | | | 100x80 |
| **80-160/150** | 15 | 20 | | 35 | | | | | | | | | 34.5 | 31.5 | 30.5 | 30 | 29.4 | 28.1 | 21 | 19.1 | 17 | | | 100x80 |
| **80-160/185** | 18.5 | 25 | | 40 | | | | | | | | | 39.5 | 36.7 | 35.7 | 35.2 | 34.7 | 33.5 | 26.4 | 24.4 | 22.3 | 20 | | 100x80 |
| **80-200/220** | 22 | 30 | | 50 | | | | | | | | | 48.5 | 44.5 | 43 | 42 | 41 | 39 | 27.8 | 25 | | | | 100x80 |
| **80-200/300** | 30 | 40 | | 60 | | | | | | | | | 59 | 56 | 54.5 | 54 | 53 | 51 | 41.5 | 39 | 36.1 | 33 | | 100x80 |

## PERFORMANCE CURVE / *CURVAS DE FUNCIONAMIENTO*

**50 Hz n=2900 1 /min**

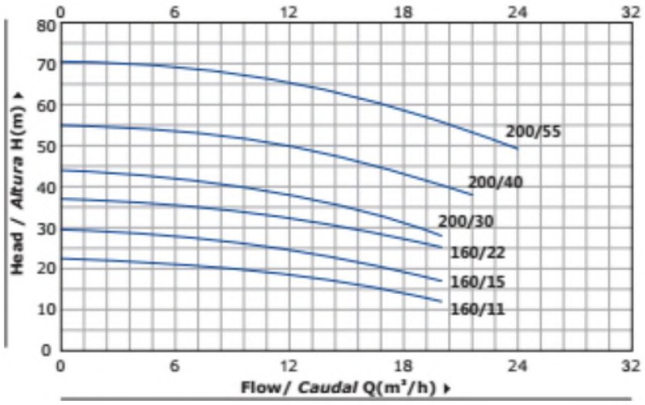


**PZ 32**

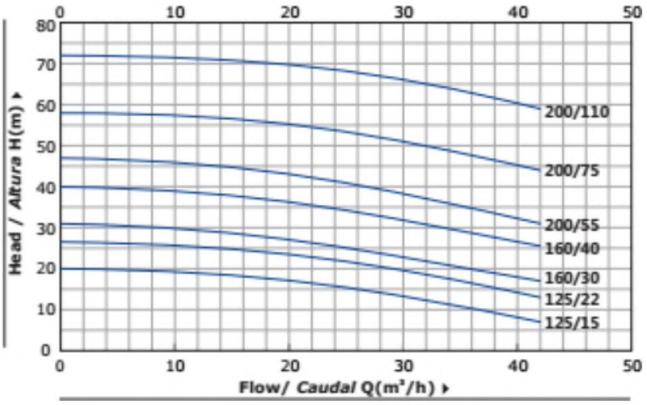


**PZ 40**

50 Hz n=29001/min

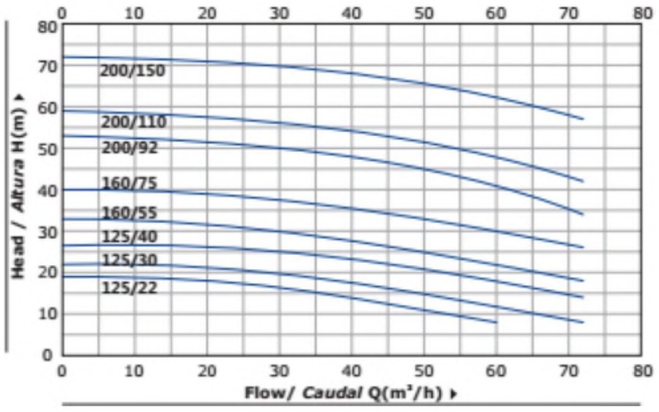


PZ 50

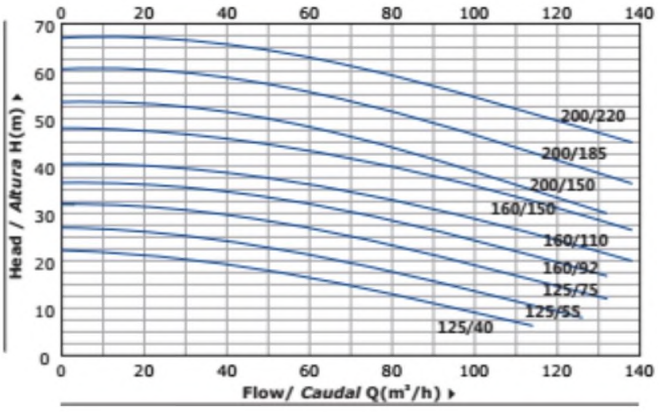


PZ 65

## MATERIAL DESCRIPTION / *DESCRIPCIbN DE MATERIAL*

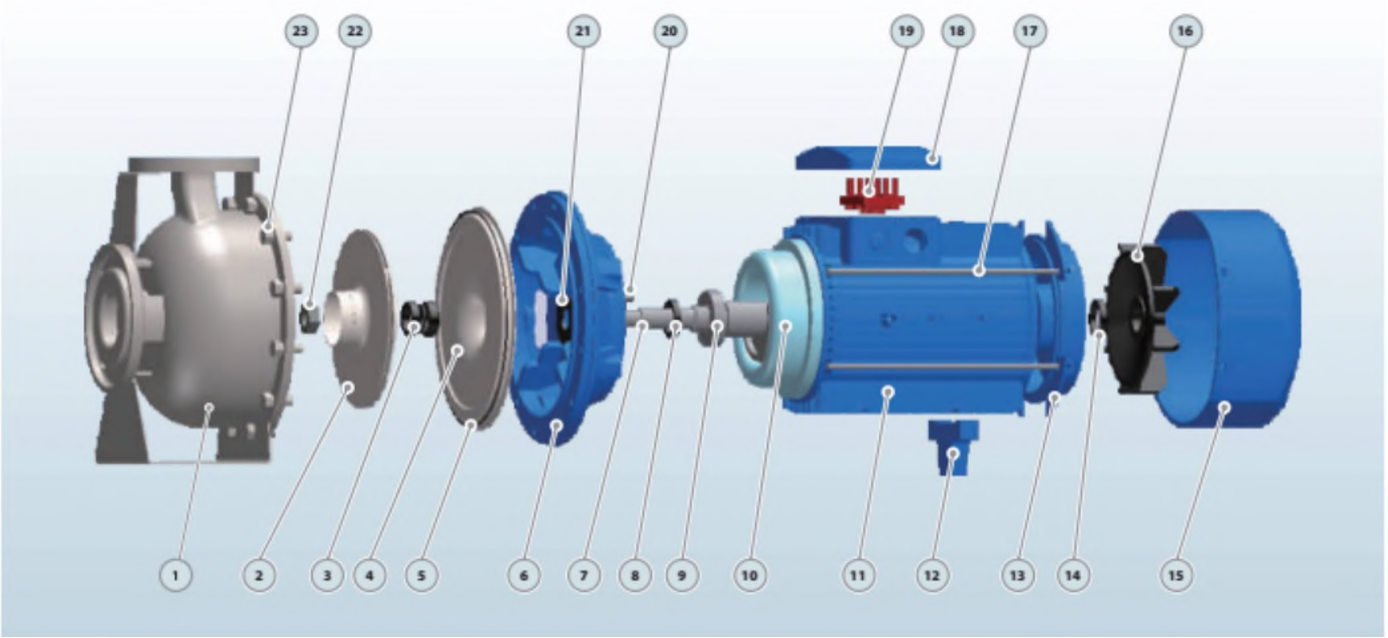


| No. | Description<br>*Descripción* | Material<br>Marenal | No* | Description<br>*Descripción* | Material<br>***Mat&riaJ*** | *No.* | Description<br>Descripción | Material<br>***Material*** |
|---|---|---|---|---|---|---|---|---|
| 1 | Pump Case<br>*Cuerpo de Bomba* | SS304<br>*In ox 304* | 9 | Bearing<br>*Rodamiento* | Ball Bearing<br>*Bold Rodamiento* | 17 | Through Bolt<br>*Pemo* | Steel<br>*Acero* |
| 2 | Impeller<br>*Impufsor* | SS304<br>*Inox 304* | 10 | Wound Stator/Rotor<br>*Estator/Rotor* | Silicon Steel'Copper<br>*Acero al SHicio/Cobre* | 18 | Terminal Box<br>*Caja de Bomes* | Aluminum<br>*Aluminio* |
| 3 | Mechanical Seal<br>*Cierre Mecánico* | SiC/Carbon/SS304<br>*SiC-Grafito-Inox304* | 11 | Motor Case<br>*Cuerpo de Motor* | Aluminum<br>*Aluminio* | 19 | *Terminal Board*<br>*Tablero de Bomes* | Plastic<br>*Plástico* |
| 4 | Baffle Plate<br>*Place de bafle* | SS304<br>*Inox 304* | 12 | Support Foot<br>*Soporte Pie* | Plastic<br>*Plástico* | 20 | Impeller Key<br>*Chaveta Imputsor* | Iron<br>*Hierro* |
| 5 | O-ring<br>*Junta Tóries* | *Rubber*<br>*Caucho* | 13 | Back Cover<br>*Tapa Trasera* | Cast iron<br>*Fundición* | 21 | Water Deflector<br>*Deflector* | Rubber<br>*Caucho* |
| 6 | Connection<br>*Conexión* | Cast iron<br>*Fundición* | 14 | Reinforced Seal<br>*Seilo Reforzado* | Rubber<br>*Caucho* | 22 | Impeller Nut<br>*Tuerca de tmpulsor* | Gatvanizated Steel<br>*Acero Galvanizado* |
| 7 | Shaft<br>*Eje* | SS304<br>*In ox 304* | 15 | Fan Cover<br>*Tapa VentUador* | Aluminum<br>*Aluminio* | 23 | Connection Bolt<br>*Pemo* | Steel<br>*Acero* |
| 8 | Reinforced Seal<br>*Setto Reforzado* | Rubber<br>*Caucho* | 16 | Fan<br>*Ventiador* | Plastic<br>*Plástico* | | | |

SO Hz n=29001/min

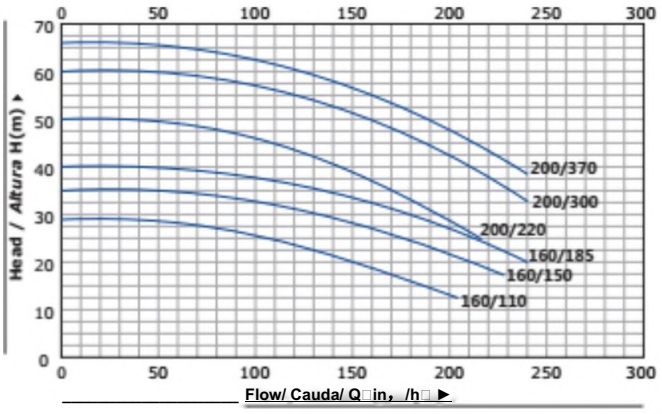


## PZ 80

### DIMENSIONS AND WEIGHT / *DIMENSIONES YPESOS*

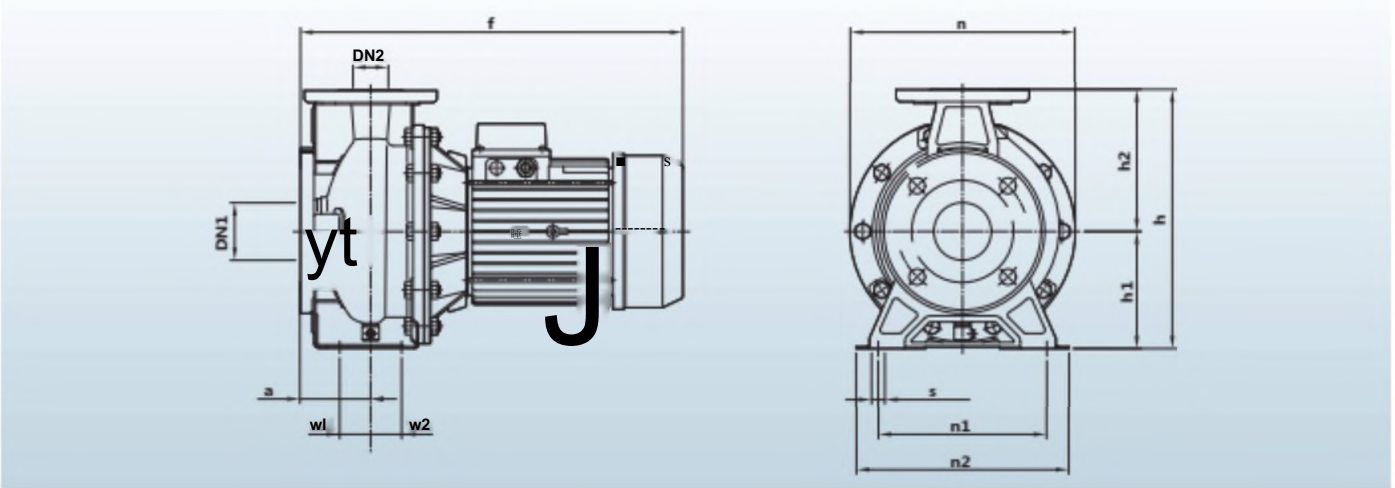

# Horizontal Water Pumps PST

## EN733 Industrial Centrifugal Pump for Water Circulation

### TECHNICAL DESCRIPTION

-New EN733 standard centrifugal pump

- Original design by PURITY (patented)
- Both square motor & round motor available
- YE3 high efficient motor, with protection IP55 class F
- Pump case with anti-corrosive coating
- Impeller in stainless steel AISI 304 or cast iron
- Shaft in stainless steel AISI 304 or galvanized iron
- Galvanized counter flange with bolts, nuts and gaskets
- Quality NSK bearing, wear resistance mechanical seal

# Related Products

# Product Description

## Techinical Description

New EN733 standard centrifugal pump
Impeller in stainless steel AISI 304 or cast iron
Shaft in stainless steel AISI 304 or galvanized iron
Galvanized counter flange with bolts, nuts and gaskets
Quality NSK bearing, wear resistance mechanical seal

## Application

Suitable for use with clean water and liquids that are not chemically aggressive towards the materials from which the pump is made.
The EN733 centrifugal pumps are recommended for use in water supply, cleaning sets, pressure boosting, firefighting sets, irrigation, industrial applications, water circulation in climatisation sets, agricultural.

## Using Limits

Liquid temperature between -10°C and +120°C
Ambient temperature up to +50°C
Max. working pressure 16 bar
Continuous service S1

## Standard Impeller Material

| DISCHARGE SIZE *TAMAfiODE DESCARGA* | IMPELLER SIZE *TAMAYO DEL 9APULSOR* | | | | | | |
|---|---|---|---|---|---|---|---|
| | 125 | 160 | 200 | 250 | 250D | 315 | 400 |
| *32* | SS304//nox304 | SS304/*»x 304 | SS304/*xw *304* | Cast *iron/FuidKi6n* | *SS3M/hcx 304* | | |
| 40 | Cast *worV/Fundid6n* | Cast *rcrV/Fundci6n* | SS304/Inox 304 | Cast *ivorV/Fundci6n* | *f* | | |
| 50 | Cast *\xan/Fmdio6n* | Cast *iron/Fundición* | Cast iroVFiodbttn | Cast *iron/Fundicibn* | / | | |
| 65 | Cast *'mn/Fundid6n* | Cast *rcn/Furutcidn* | Cast *iton/FurKicidn* | Cast *ivon/FundiciAn* | / | Cast *trciy/FuKScidn* | |
| 80 | Cast *won/Fuidia6n* | Cast *tron/Fuufd6n* | Cast *kcn/Fmdddn* | Cast *irorV/Fm<fd6n* | / | Cast *iron/Fmdcidn* | Cast irorV^iodcidn |
| 100 | | Cast *iron/Fundición* | Cast *ircn/F^dci6n* | Cast *ivon/Furxicidn* | / | Cast *rcn/Fmdci6n* | Cast *Ircn/Fu}dci6n* |
| 125 | | | Cast *vorV/FuHSd6n* | Cast *ivorV/Fuidei6n* | / | Cast *ron/Fmdci6n* | Cast *ircn/Fimfd6n* |
| 150 | | | Cast *rori/Fundcidn* | Cast *imn/Fmdtidn* | / | Cast *vcn/FiiHfci6n* | Cast irofVFuTdcidn |
| 200 | | | | Cast *ivon/Fmd) d6n* | / | Cast *rcn/Fuideidn* | Cast *iron/Fmdcidn* |
| 250 | | | | | / | Cast *rcn/F^dei6n* | Cast *ircn/Fundei6n* |

# Dimensions And Weight

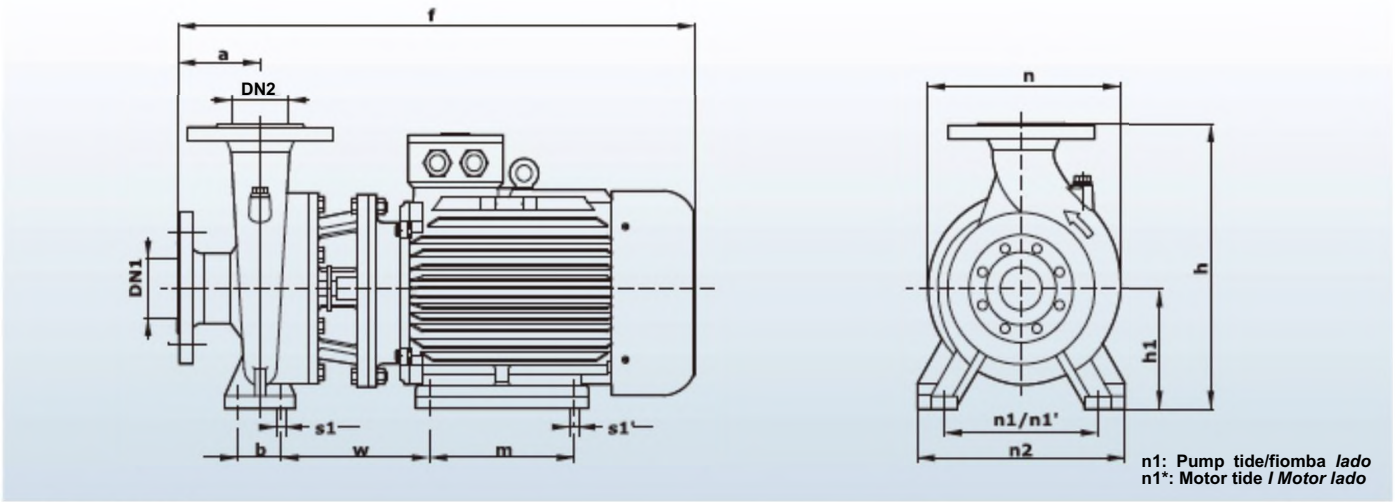


| MODEL/MODELO Three-phase *TrfUsico* | DIMENSIONS / *DIMENSIONESmm* | | | | | | | | | | | | | | | kg |
|---|---|---|---|---|---|---|---|---|---|---|---|---|---|---|---|---|
| | DN1 | DN2 | a | f | h | h! | n | n! | nV | n2 | b | w | m | s1 | sV | 3* |
| 6S-250/220 | 80 | 65 | 116 | 870 | 420 | 180 | 369 | 260 | 279 | 320 | 70 | 246 | 241 | 18 | IS | 210 |
| 65-250/300 | | | | 990 | 456 | 195 | | 250 | 318 | 327 | | 293 | 305 | | 19 | 230 |
| 6S.250/370 | | | | | | | | | | | | | | | | 240 |
| 80-200/220 | 100 | 80 | 118 | 880 | 460 | 250 | 360 | 310 | 279 | 260 | 95 | 25« | | 20 | | 212 |
| 80*200/300 | | | | 9S0 | | | | | 318 | | | 246 | 241 | | IS | *222* |
| 80-250/370 | | | 130 | | 537 | | 490 | | | 310 | | 228 | 305 | | 19 | 245 |
| 80*250/450 | | | | 980 | | | | | 356 | | | 229 | 311 | | | 385 |
| 80-250/550 | | | | 1160 | | | | | 406 | | | 363 | 349 | | 24 | 497 |
| 100-200/220 | 125 | 100 | 140 | 910 | 530 | 225 | 422 | 324 | 279 | 402 | 115 | 256 | 305 | 18 | 15 | 217 |
| 100-200/300 | | | | 1025 | | | | | 318 | | | *248* | 241 | | | 227 |
| 100*200/370 | | | | | | | | | | | | | | | | 2S0 |
| 100.250/450 | | | | 1000 | sao | 250 | 418 | 310 | 356 | 402 | 95 | 224 | 311 | 20 | 19 | 390 |
| 100-2 5O/5SO | | | | 1180 | | | | | 406 | | | 325 | 349 | | 20 | 503 |
| 100-250/750 | | | | 1250 | | 280 | | | 436 | | | | | | | 535 |

# Technical Data

50Hz n=2900 1/min

| MODEL *MODELO* | Power *Potencia* | | US gpm | Q= DELIVERY/ *CAUDAL* | | | | | | | | | | | | | | | | | | | DN |
|---|---|---|---|---|---|---|---|---|---|---|---|---|---|---|---|---|---|---|---|---|---|---|---|
| | | | | 0 | 26 | 40 | 66 | 79 | 106 | 119 | 159 | 185 | 211 | 238 | 317 | 370 | 396 | 476 | 529 | 608 | 793 | 925 | |
| | | | l/min | 0 | 100 | 150 | 250 | 300 | 400 | 4S0 | 600 | 700 | 800 | 900 | 1200 | 1400 | 1SOO | 1800 | 2000 | 2300 | SOOO | 3500 | |
| I | kw | hp | mTh | 0 | 6 | 9 | 15 | 18 | 24 | 27 | 36 | 42 | 48 | S4 | 72 | d4 | 90 | 108 | 120 | 118 | 180 | 210 | mm |
| 32-12 S/07 o | 0.75 | 1 | | 17.5 | 16.7 | 15 | 12 | 9 | | | | | | | | | | | | | | | 50x32 |
| 32-12S/11 o | LI | L5 | | 22 | 21 | 19.7 | 165 | 145 | 9 | | | | | | | | | | | | | | 50x32 |
| 32-160/15 • | 15 | 2 | | 25.4 | 23.7 | 22.5 | 18.5 | 153 | | | | | | | | | | | | | | | 50x32 |
| 32-160/22 • | 22 | 3 | | 31 | 29.6 | 28.5 | 24.5 | 22 | 15 | | | | | | | | | | | | | | 50x32 |
| 32-160/30 • | 3 | 4 | | 35 | 343 | 34 | 28 | 255 | 19 | 15 | | | | | | | | | | | | | 50x32 |
| 32-200/30 • | 3 | 4 | | 44.2 | 43 | 393 | 352 | 322 | 24.6 | 193 | | | | | | | | | | | | | 50x32 |
| 32-200/40 • | 4 | 55 | | 54.5 | 52 | 50 | 455 | 41.9 | 35 | 303 | | | | | | | | | | | | | 50x32 |
| 32-250/55 • | 55 | 75 | | 60 | 595 | 59 | 55 | 51 | 345 | | | | | | | | | | | | | | 50x32 |
| 32-250/7S • | 75 | 10 | | 695 | 69 | 68.5 | 66 | 63 | 53 | | | | | | | | | | | | | | 50x32 |
| 32-250/110 • | 11 | 15 | | 90 | 89.5 | 89 | 82 | 79 | 66 | | | | | | | | | | | | | | 50x32 |
| 32-250/5 SDc | 55 | 7S | | 79.5 | 74.7 | 713 | 63 | 56 | 375 | | | | | | | | | | | | | | 50x32 |
| 32-250/7 5Do | 75 | 10 | | 95 | 93 | 91 | 83 | 76 | 573 | | | | | | | | | | | | | | 50x32 |
| 40-12S/11 o | LI | 15 | | 14.7 | | | | 135 | 115 | 10.1 | 53 | | | | | | | | | | | | 65x40 |
| 4012S/1S ° | 15 | 2 | | 18.1 | | | | 17 | 15 | 13.9 | 9.6 | 6 | | | | | | | | | | | 65x40 |
| 40*125/22 o | 22 | 3 | | 24.5 | | | | 232 | 2L5 | 202 | 16 | 13 | &3 | | | | | | | | | | 65x40 |
| 40-160/30 • | 3 | 4 | | 31.8 | | | | 295 | 275 | 263 | 2L5 | 175 | | | | | | | | | | | 65x40 |
| 40-160/40 • | 4 | 55 | | 38 | | | | 36 | 34 | 33 | 28.5 | 25 | 2Q1 | | | | | | | | | | 65x40 |
| 40-200/55 • | 55 | 75 | | 46 | | | | 433 | 413 | 40.1 | 35 | 30 | | | | | | | | | | | 65x40 |
| 40-200/75 • | 75 | 10 | | 57 | | | | 53.6 | 5L5 | 50 | 45 | 41 | 3&5 | | | | | | | | | | 65x40 |
| 40*250/92 • | 92 | 12.5 | | 64 | | | | 59 | 56.5 | 55 | 49.5 | 45 | 39.8 | | | | | | | | | | 65x40 |
| 40-250/110 • | 11 | 15 | | 72 | | | | 675 | 66 | 63.5 | 57S | 522 | 47 | | | | | | | | | | 65x40 |
| 40-250/150* | 15 | 20 | | 84.5 | | | | 80 | 773 | 752 | 71 | 65 | 61 | | | | | | | | | | 65x40 |
| S0-U5/22 • | 22 | 3 | | 17 | | | | | | | 15.4 | 14 | 128 | 1L5 | 6.5 | | | | | | | | 65x50 |
| 50-U5/30 • | 3 | 4 | | 20 | | | | | | | 183 | 18 | 17 | 15.6 | 11 | | | | | | | | 65x50 |
| 50-125/40 • | 4 | 55 | | 24 | | | | | | | 231 | 23 | 215 | 20.3 | 153 | 113 | | | | | | | 65x50 |
| S0-160/55 • | 55 | 75 | H(m) | 32 | | | | | | | 30.6 | 30 | 28 | 26.6 | 205 | 14B | | | | | | | 65x50 |
| 50-160/75 • | 75 | 10 | | 40 | | | | | | | 38 | 37 | 36 | 34.4 | 29 | 24 | 21 | | | | | | 65x50 |
| 50-200/92 • | 92 | 125 | | 50.5 | | | | | | | 463 | 45 | 43 | 40.9 | 323 | 26.7 | | | | | | | 65x50 |
| 50-200A10 • | 11 | 15 | | 57.5 | | | | | | | 535 | 52 | 50 | 47.5 | 40 | 34 | 29 | | | | | | 65x50 |
| 50-200/150 • | 15 | 20 | | 62 | | | | | | | 58 | 565 | 54.5 | 52 | 44.5 | 39 | 35.5 | | | | | | 65x50 |
| 5O-2S0/15O • | 15 | 20 | | 68.5 | | | | | | | 64 | 63 | 615 | 59 | 50 | 41 | | | | | | | 65x50 |
| 50-250/185 • | 18.5 | 25 | | 79 | | | | | | | 753 | 743 | 74 | 7L5 | 635 | 555 | 47 | | | | | | 65x50 |
| 50-250/220 • | 22 | 30 | | 89.5 | | | | | | | 86 | 853 | 84 | 81.5 | 735 | 655 | 57 | | | | | | 65x50 |
| 65-US/40 · | 4 | 5S | | 19 | | | | | | | | | 17.3 | 16.8 | 145 | 13 | 113 | | | | | | dOx65 |
| 65-12S/5S · | 55 | 75 | | 23 | | | | | | | | | 213 | 20.9 | 19 | 175 | 16.7 | 13.7 | | | | | 80x6S |
| 65-U5/75 • | 75 | 10 | | 27 | | | | | | | | | 26 | 25.6 | 245 | 23 | 22.5 | 20 | 18 | | | | 80x65 |
| 65-160/92 • | 92 | 125 | | 33 | | | | | | | | | | 31.5 | 30 | 28 | 27.1 | 24 | 215 | | | | 80x65 |
| 65-160/110 · | 11 | 15 | | 36 | | | | | | | | | | 34.5 | 33 | 315 | 303 | 28 | 25.5 | | | | 80x65 |
| 65 160/150 • | 15 | 20 | | 42 | | | | | | | | | | 41 | 40 | 385 | 373 | 35 | 33 | 29.5 | | | 80x65 |
| 65-200/150 • | 15 | 20 | | 45 | | | | | | | | | | 45.5 | 43 | 41 | 402 | 36.5 | 34 | | | | 80x65 |
| 65-200/18S • | 18.5 | 25 | | 52 | | | | | | | | | | 52.3 | 51 | 49 | 4B2 | 44.5 | 42 | | | | 80x65 |
| 65-200/220 • | 22 | 30 | | S9 | | | | | | | | | | 59.5 | 58 | 56 | 55 | 52 | 49.5 | 44.5 | | | a0x65 |
| 65-250/220 * | 22 | 30 | | 64.8 | | | | | | | | | | 64.7 | 62 | 60 | 53.5 | 53 | 50 | | | | 80x65 |
| 65-250/300 · | 30 | 40 | | 80 | | | | | | | | | | 79.8 | 775 | 755 | 74.5 | 70 | 66 | 58 | | | 80x65 |
| 65-250/370 · | 37 | 50 | | 92 | | | | | | | | | | 90.5 | 88.5 | 87 | 85 | 80.5 | 78 | 68 | | | 80x65 |
| 65-315/370 · | 37 | 50 | | 102 | | | | | | | | | | 99.2 | 97 | 95 | 94.5 | 92.4 | 90 | 83 | | | 80x65 |
| 65-315/4S0* | 45 | 60 | | 112 | | | | | | | | | | 1092 | 107.7 | 1053 | 104.5 | 102.5 | 100 | 93 | 66 | | 80x65 |
| 6S-315/5S0* | 55 | 75 | | 122 | | | | | | | | | | 1192 | 117.4 | 115.7 | 114.5 | 1125 | 110 | 103 | 76 | | 80x65 |
| 65-315/750 • | 75 | 100 | | 141 | | | | | | | | | | 1393 | 1373 | 135.6 | 1345 | 1323 | 130 | 122 | 96 | 655 | 80x65 |
| 80-125/40 • | 4 | 55 | | 17 | | | | | | | | | 1&5 | 15.9 | 143 | 135 | 11.6 | 10 | 7.5 | | | | lOOxflO |
| 80-125/55 • | 55 | 75 | | 21 | | | | | | | | | 2Q5 | 20 | 19 | 18 | 16.5 | 15 | 125 | 9LS | | | 100x80 |
| 80 125/75 • | 75 | 10 | | 26 | | | | | | | | | 25 | 25 | 245 | 233 | 22.5 | 213 | 145 | 16.5 | | | 100x80 |

°=PST available ᵉ=PS available ᵉ=PST&PS available/d/spon/b/e

# Technical Data

50Hz n=2900 1/min

| MODEL *MODELO* | Power *Potencia* | | us gem l/min rn^/h | Q^DEUVERY/ C4L/D4I | | | | | | | | | | | | | | | | | | DN |
|---|---|---|---|---|---|---|---|---|---|---|---|---|---|---|---|---|---|---|---|---|---|---|
| | | | | 0 | 264 | 396 | S29 | 6M | 793 | 881 | 92S | 969 | 1057 | 1233 | 1322 | 1S86 | 1762 | 2203 | 2543 | 3S24 | 440S | |
| | | | | 0 | 1000 | 1S00 | 2000 | 2400 | 3000 | 3333 | 3500 | S666 | 4000 | 4666 | SOOO | E000 | 6666 | 8333 | 10000 | 13331 | 16666 | |
| | kw | hp | | 0 | 60 | 90 | 120 | 144 | 180 | 200 | 210 | 220 | 240 | 280 | 300 | 360 | 400 | 500 | 600 | 800 | 1000 | mm |
| 80160/110 • | 11 | 15 | | 27 | 27 | 273 | 245 | 211 | 16 | | | | | | | | | | | | | 100x80 |
| 80-160/1S0 • | 15 | 20 | | 32.8 | 32.6 | 323 | 3Q2 | 27 | 2Z1 | 18.5 | 16.7 | | | | | | | | | | | 100x80 |
| 80-160/135 • | 18.5 | 25 | | 39 | 38.5 | 38 | 3&7 | 33.6 | 28.8 | 253 | 23.5 | | | | | | | | | | | 100x80 |
| 80*160/220 • | 22 | 30 | | 44 | 435 | 43 | 417 | 38.6 | 33.8 | 303 | 28.5 | | | | | | | | | | | 100x80 |
| 80*200/220 • | 22 | 30 | | 48 | 47.7 | 475 | 415 | 392 | 32.5 | 272 | 24.5 | | | | | | | | | | | 100x80 |
| 80-200/300 • | 30 | 40 | | 60 | 597 | 595 | 57 | 53.1 | 47 | 4Z7 | 40.5 | | | | | | | | | | | 100x80 |
| 80-250/370 • | 37 | 50 | | 71.5 | 70.9 | 70S | 65.5 | 593 | 51 | 432 | 38.5 | | | | | | | | | | | 100x80 |
| 80-2S0/450 • | 45 | 60 | | 88 | 86.7 | 86 | 816 | 78.5 | 70.5 | 60 | 51 | | | | | | | | | | | 100x80 |
| 8O2SO/55O • | 55 | 75 | | 94.5 | 945 | 945 | 918 | 87 | 79.5 | 721 | 68.3 | | | | | | | | | | | 100x80 |
| 80-315/450 • | 45 | 60 | | 85 | 84 | 82.6 | 82 | 78 | 68.3 | 61 | 56 | | | | | | | | | | | 100x80 |
| 80-315/550 • | 5S | 75 | | 98 | 97 | 95.6 | 95 | 91 | 81.3 | 74 | 69 | | | | | | | | | | | 100x80 |
| 80-315/750 • | 75 | 100 | | 124 | 123 | 121.6 | 121 | 117 | 107.3 | 100 | 95 | 90 | 803 | | | | | | | | | 100x80 |
| 80-315/900 • | 90 | 125 | | 144 | 143 | 141.6 | 141 | 137 | 127.3 | 120 | U5 | 110 | 1003 | | | | | | | | | 100x80 |
| 100-16(yi50 • | 15 | 20 | | 35 | 33S | 323 | 30 | 273 | 24.5 | 21.5 | 20 | 183 | 15 | | | | | | | | | 125x100 |
| 100-16C/185 • | 18.5 | 25 | | 38.5 | 375 | 36.5 | 34.3 | 322 | 29 | 25.7 | 24 | 22 | 18 | | | | | | | | | 125x100 |
| 100-16(^220 • | 22 | 30 | | 43 | 41 | 40 | 37.6 | 352 | 31.5 | 28.5 | 27 | 253 | 22 | | | | | | | | | 125x100 |
| 100-20CV220 • | 22 | 30 | | 38.5 | 36.7 | 35.7 | 318 | 3L7 | 28.5 | 263 | 26 | 25 | 22.9 | 163 | 13 | | | | | | | 125x100 |
| 100-20(^300 • | 30 | 40 | | 44.5 | 42.5 | 42 | 4G2 | 383 | 36.7 | 342 | 33 | 3L7 | 29 | 217 | 18 | | | | | | | 125x100 |
| 100-20CV370 • | 37 | 50 | | 55 | 53 | 51 | 5Q6 | 492 | 47 | 45 | 44 | 423 | 40.5 | 323 | 29 | | | | | | | 125x100 |
| 100-25(X450 • | 45 | 60 | | 65 | 65 | 64 | 63 | 61 | 58 | 56 | 55 | 533 | 50 | 39 | 335 | | | | | | | 125x100 |
| 100-25(y5S0 • | 55 | 75 | | 77 | 76 | 755 | 75 | 733 | 72 | 7L7 | 71.5 | 70.7 | 69 | 623 | 59 | | | | | | | 125x100 |
| 100-25(^750 • | 75 | 100 | | 91 | 91 | 90.5 | 89.7 | 8S | 85.5 | 84 | 83.3 | 81.5 | 78 | 717 | 68.5 | 48 | | | | | | 125x100 |
| 100-315/550 • | 55 | 75 | | 80 | | | 79 | 77.4 | 75 | 74 | 73.5 | 73 | 713 | 68 | 66 | 60 | | | | | | 125x100 |
| 100-315/750 • | 75 | 100 | "(叫 | 100 | | | 99 | 97.4 | 95 | 94 | 93.5 | 93 | 913 | 88 | 86 | ao | | | | | | 125x100 |
| 10031V900 • | 90 | 125 | | 118 | | | 116.5 | 114.7 | 112 | 111 | U03 | 1105 | 1087 | 106 | 104 | 98 | | | | | | 125x100 |
| 1OO-315/11OO • | 110 | 150 | | 138 | | | 136.5 | 1347 | 132 | 131 | BOB | 130S | 128.7 | 126 | 124 | 118 | | | | | | 125x100 |
| 12S-20CV450 · | 45 | 60 | | 39.8 | | | 3ft3 | 392 | 39 | 38.9 | 38.9 | 383 | 375 | 35 | 34 | 2&6 | 25 | | | | | 150x125 |
| 125-200/550 • | 55 | 75 | | 49.8 | | | 493 | 492 | 49 | 43.9 | 48.9 | 483 | 475 | 45 | 44 | 3&6 | 35 | | | | | 150x125 |
| 125-200/750 · | 75 | 100 | | 60.8 | | | 603 | 602 | 60 | 59.9 | 59.9 | 593 | 58.5 | 56 | 55 | 4916 | 46 | | | | | 150x125 |
| U5-2S0/550 · | 55 | 75 | | 70 | | | 67 | 6S | 64 | 63 | 62 | 61 | 59.5 | 57 | 56 | 53 | | | | | | 150x125 |
| 125-250/750 • | 75 | 100 | | 80 | | | 77 | 75 | 74 | 73 | 72 | 71 | 693 | 67J | 662 | 63 | 585 | | | | | 150x125 |
| 12S-250/900 • | 90 | 125 | | 87 | | | 84 | 82 | 81 | 80 | 79 | 78 | 77 | 745 | 735 | 70.2 | 65.7 | | | | | 150x125 |
| L25-250A100 • | 110 | 150 | | 97 | | | ^4 | 92 | 91 | 90 | 的 | 88 | 87 | 84.6 | 83.9 | 8Q4 | 76 | | | | | 150x125 |
| 125-315/900 • | 90 | 125 | | 89 | | | | | | 87 | 86 | 85 | 83.7 | 81.5 | 81 | 77 | 74 | 61 | | | | 150x125 |
| L25-315A100 • | 110 | 150 | | 103 | | | | | | 101 | 100 | 99 | 973 | 955 | 95 | 915 | 882 | 75.6 | | | | 150x125 |
| 125-315A320 · | 132 | 180 | | 11B | | | | | | 116 | US | 114 | 1123 | 1105 | 1103 | 106.5 | 1032 | 91 | | | | 150x125 |
| U5-315A600 • | 160 | 220 | | 138 | | | | | | 1363 | 135^ | 135 | 133.7 | 131.5 | 131 | 127.5 | 1242 | 112 | | | | 150x125 |
| 150-200/750 · | 75 | 100 | | 50 | | | | | | | | 43 | 47.9 | 47.6 | 472 | 4&7 | 46.4 | 40.6 | 36B | 25.2 | | 200x150 |
| 150-200/900 • | 90 | 125 | | 56 | | | | | | | | 54 | 535 | 53.6 | 532 | 527 | 5Z4 | 48 | 423 | 312 | | 200x150 |
| 150*200/1100 • | 110 | 150 | | 65.2 | | | | | | | | 62 | 61.7 | 612 | 603 | 59.8 | 592 | 57.2 | 54 | 46 | | 200x150 |
| 150^250/1100 • | 110 | 150 | | 67 | | | | | | | | | | | 642 | 62 | 60.6 | 55.8 | 493 | 33.8 | | 200x150 |
| 150-250A320 · | 132 | iao | | 80.2 | | | | | | | | | | | 782 | 763 | 75 | 70.6 | 65 | sa2 | 29.8 | 200x150 |
| 150-250A600 • | 160 | 220 | | 90 | | | | | | | | | | | 88.4 | 87 | 86 | 82 | 772 | 624 | 42 | 200x150 |
| 150315/1600 • | 160 | 220 | | 92 | | | | | | | | | | | 90 | 883 | 872 | 82.8 | 763 | 6Q4 | | 200x150 |
| 150-315/2000 • | 200 | 270 | | 111 | | | | | | | | | | | 1106 | 10&7 | 107.4 | 103.4 | 982 | 814 | 62.2 | 200x150 |
| 150-315/2500 • | 250 | 340 | | 135 | | | | | | | | | | | 135.4 | 133.7 | 132.6 | 128.6 | 1233 | 110.2 | 91 | 200x150 |

· =PS available •=PST&PS availa*b\e/disponibte*

# Related Products

# Product Description

## Techinical Description

New EN733 standard centrifugal pump
Impeller in stainless steel AISI 304 or cast iron
Shaft in stainless steel AISI 304 or galvanized iron
Galvanized counter flange with bolts, nuts and gaskets
Quality NSK bearing, wear resistance mechanical seal

## Application

Suitable for use with clean water and liquids that are not chemically aggressive towards the materials from which the pump is made.
The EN733 centrifugal pumps are recommended for use in water supply, cleaning sets, pressure boosting, firefighting sets, irrigation, industrial applications, water circulation in climatisation sets, agricultural.

## Using Limits

Liquid temperature between -10°C and +120°C
Ambient temperature up to +50°C
Max. working pressure 16 bar
Continuous service S1

## Standard Impeller Material

| DISCHARGE SIZE *TAMAfiODE DESCARGA* | IMPELLER SIZE *TAMAYO DEL 9APULSOR* | | | | | | |
|---|---|---|---|---|---|---|---|
| | 125 | 160 | 200 | 250 | 250D | 315 | 400 |
| *32* | SS304//nox304 | SS304/*»x 304 | SS304/*xw *304* | Cast *iron/FuidKi6n* | *SS3M/hcx 304* | | |
| 40 | Cast *worV/Fundid6n* | Cast *rcrV/Fundci6n* | SS304/Inox 304 | Cast *ivorV/Fundci6n* | *f* | | |
| 50 | Cast *\xan/Fmdio6n* | Cast *iron/Fundición* | Cast iroVFiodbttn | Cast *iron/Fundicibn* | / | | |
| 65 | Cast *'mn/Fundid6n* | Cast *rcn/Furutcidn* | Cast *iton/FurKicidn* | Cast *ivon/FundiciAn* | / | Cast *trciy/FuKScidn* | |
| 80 | Cast *won/Fuidia6n* | Cast *tron/Fuufd6n* | Cast *kcn/Fmdddn* | Cast *irorV/Fm<fd6n* | / | Cast *iron/Fmdcidn* | Cast irorV^iodcidn |
| 100 | | Cast *iron/Fundición* | Cast *ircn/F^dci6n* | Cast *ivon/Furxicidn* | / | Cast *rcn/Fmdci6n* | Cast *Ircn/Fu}dci6n* |
| 125 | | | Cast *vorV/FuHSd6n* | Cast *ivorV/Fuidei6n* | / | Cast *ron/Fmdci6n* | Cast *ircn/Fimfd6n* |
| 150 | | | Cast *rori/Fundcidn* | Cast *imn/Fmdtidn* | / | Cast *vcn/FiiHfci6n* | Cast irofVFuTdcidn |
| 200 | | | | Cast *ivon/Fmd) d6n* | / | Cast *rcn/Fuideidn* | Cast *iron/Fmdcidn* |
| 250 | | | | | / | Cast *rcn/F^dei6n* | Cast *ircn/Fundei6n* |

## Material Description

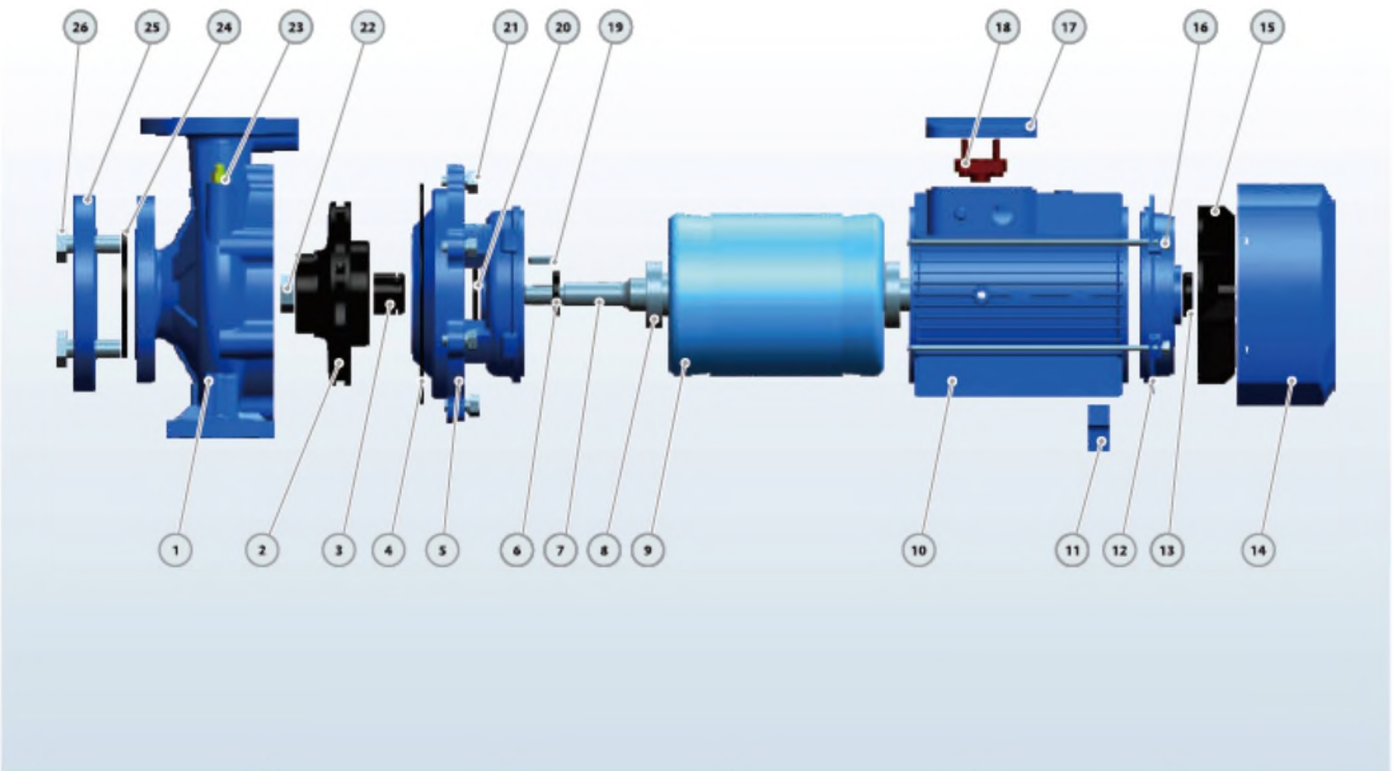


| No. | Description<br>*Descripción* | Material<br>*Material* | No. | Description<br>*Descripción* | Material<br>*Material* | No. | Description<br>*Descripción* | Material<br>*Material* |
|---|---|---|---|---|---|---|---|---|
| 1 | Pump Case<br>*Cuerpo de Bomba* | Cast iron<br>*Fundición* | 10 | Motor Case<br>*Cuerpo de Motor* | Aluminum<br>*Aluminio* | 19 | Impeller Key<br>*Chaveta Impulsor* | Iron<br>*Hierro* |
| 2 | Impeller<br>*Impulsor* | SS304/Cast iron<br>*Inox 304/Fundición* | 11 | Support Foot<br>*Soporte Pie* | Plastic<br>*Plástico* | 20 | Water Deflector<br>*Deflector* | Rubber<br>*Caucho* |
| 3 | Mechanical Seal<br>*Cierre Mecánico* | SiC/Carbon/SS304<br>*SiC-Grafito-Inox304* | 12 | Back Cover<br>*Tapa Trasera* | Cast iron<br>*Fundición* | 21 | Connection Bolt<br>*Perno* | Steel<br>*Acero* |
| 4 | O-ring<br>*Junta Tórica* | *Rubber*<br>*Caucho* | 13 | Reinforced Seal<br>*Sello Reforzado* | Rubber<br>*Caucho* | 22 | Impeller Nut<br>*Tuerca de Impulsor* | Galvanizated Steel<br>*Acero Galvanizado* |
| 5 | Connection<br>*Conexión* | Cast iron<br>*Fundición* | 14 | Fan Cover<br>*Tapa Ventilador* | Aluminum<br>*Aluminio* | 23 | Release Valve<br>*Tapón Cebado* | Brass<br>*Bronce* |
| 6 | Reinforced Seal<br>*Sello Reforzado* | Rubber<br>*Caucho* | 15 | Fan<br>*Ventilador* | Plastic<br>*Plástico* | 24 | Gasket<br>*Empague* | Rubber<br>*Caucho* |
| 7 | Shaft<br>*Eje* | SS304/45# Steel<br>*Inox 304/45# Hierro* | 16 | Through Bolt<br>*Perno* | Steel<br>*Acero* | 25 | Counter Flange<br>*Contra Brida* | Galvanizated Cast iron<br>*Fundición Galvanizado* |
| 8 | Bearing<br>*Rodamiento* | Ball Bearing<br>*Bola Rodamiento* | 17 | Terminal Box<br>*Caja de Bornas* | Aluminum<br>*Aluminio* | 26 | Flange Bolt<br>*Perno de Brida* | Steel<br>*Acero* |
| 9 | Wound Stator/Rotor<br>*Estator / Rotor* | Silicon Steel/Copper<br>*Acero al Silicio/Cobre* | 18 | *Terminal Board*<br>*Tablero de Bornas* | Plastic<br>*Plástico* | | | |

# Dimensions And Weight

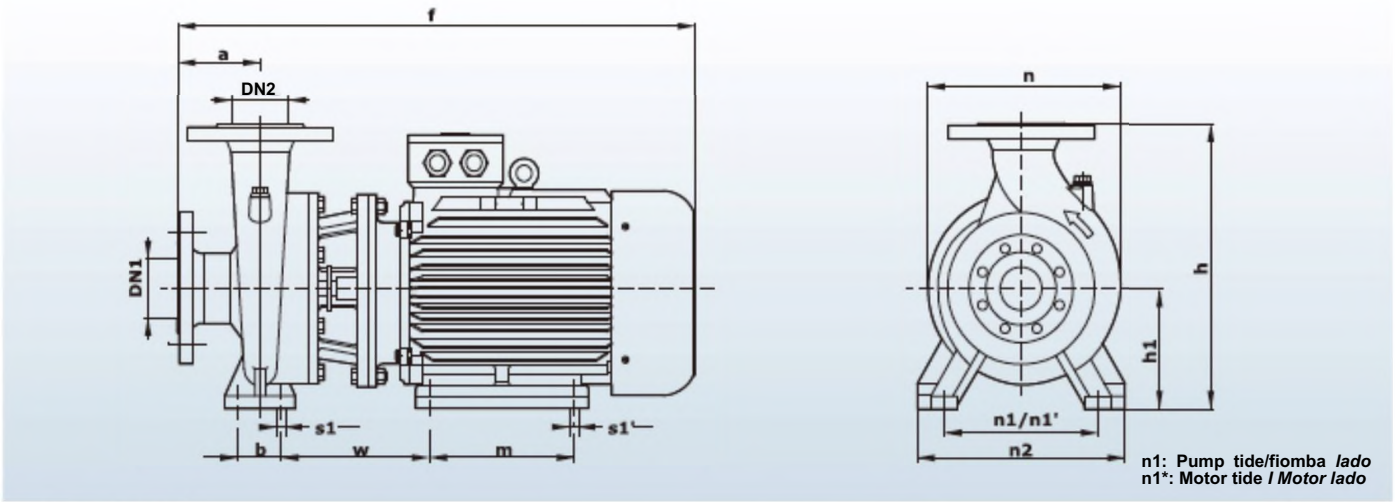


| MODEL/MODELO Three-phase *TrfUsico* | DIMENSIONS / *DIMENSIONESmm* | | | | | | | | | | | | | | | kg |
|---|---|---|---|---|---|---|---|---|---|---|---|---|---|---|---|---|
| | DN1 | DN2 | a | f | h | h! | n | n! | nV | n2 | b | w | m | s1 | sV | 3* |
| 6S-250/220 | 80 | 65 | 116 | 870 | 420 | 180 | 369 | 260 | 279 | 320 | 70 | 246 | 241 | 18 | IS | 210 |
| 65-250/300 | | | | 990 | 456 | 195 | | 250 | 318 | 327 | | 293 | 305 | | 19 | 230 |
| 6S.250/370 | | | | | | | | | | | | | | | | 240 |
| 80-200/220 | 100 | 80 | 118 | 880 | 460 | 250 | 360 | 310 | 279 | 260 | 95 | 25« | | 20 | | 212 |
| 80*200/300 | | | | 9S0 | | | | | 318 | | | 246 | 241 | | IS | *222* |
| 80-250/370 | | | 130 | | 537 | | 490 | | | 310 | | 228 | 305 | | 19 | 245 |
| 80*250/450 | | | | 980 | | | | | 356 | | | 229 | 311 | | | 385 |
| 80-250/550 | | | | 1160 | | | | | 406 | | | 363 | 349 | | 24 | 497 |
| 100-200/220 | 125 | 100 | 140 | 910 | 530 | 225 | 422 | 324 | 279 | 402 | 115 | 256 | 305 | 18 | 15 | 217 |
| 100-200/300 | | | | 1025 | | | | | 318 | | | *248* | 241 | | | 227 |
| 100*200/370 | | | | | | | | | | | | | | | | 2S0 |
| 100.250/450 | | | | 1000 | sao | 250 | 418 | 310 | 356 | 402 | 95 | 224 | 311 | 20 | 19 | 390 |
| 100-2 5O/5SO | | | | 1180 | | | | | 406 | | | 325 | 349 | | 20 | 503 |
| 100-250/750 | | | | 1250 | | 280 | | | 436 | | | | | | | 535 |

# Technical Data

60Hz n=3500 1/min

| MODa MODELO | Power Potencia | | US 9pm | Q= DeUVEKY, CAUDAL | | | | | | | | | | | | | | | | | | | DN |
|---|---|---|---|---|---|---|---|---|---|---|---|---|---|---|---|---|---|---|---|---|---|---|---|
| | | | | 0 | 26 | 40 | 66 | 79 | 106 | 119 | 1S9 | 18S | 211 | 238 | 317 | 370 | 396 | 476 | S29 | 608 | 793 | 925 | |
| | | | l/min | 0 | 100 | ISO | 2 SO | 300 | 400 | 4S0 | 600 | 700 | 800 | 900 | 1200 | 1400 | 1500 | 1800 | 2000 | 2300 | 3000 | 3500 | |
| | kw | hp | fTp/h | 0 | 6 | 9 | IS | 18 | 24 | 27 | 36 | 42 | 48 | 54 | 72 | 84 | 90 | 108 | 120 | 138 | 1的 | 210 | mm |
| 32-12 5A>7 o | 0.75 | 1 | | 17.5 | 16.7 | 15 | 12 | 9 | | | | | | | | | | | | | | | 50x32 |
| 32-125/11 o | 11 | 15 | | 22 | 21 | 19.7 | 165 | 145 | 9 | | | | | | | | | | | | | | 50x32 |
| 32.160/15 • | 15 | 2 | | 25.4 | 23.7 | 225 | 185 | IS名 | | | | | | | | | | | | | | | 50x32 |
| 32.160/22 · | 22 | 3 | | 31 | 29J6 | 285 | 245 | 22 | 15 | | | | | | | | | | | | | | 50x32 |
| 32-160/30 • | 3 | 4 | | 35 | 343 | 34 | 28 | 255 | 19 | 15 | | | | | | | | | | | | | 50x32 |
| 32-200/30 · | 3 | 4 | | 44.2 | 43 | 39名 | 352 | 322 | 24.6 | 19名 | | | | | | | | | | | | | 50x32 |
| 32-200/40 • | 4 | 55 | | 54.5 | 52 | 50 | 455 | 41J9 | 35 | 303 | | | | | | | | | | | | | 50x32 |
| 32-2S0/5S • | 53 | IS | | 60 | 595 | 59 | 55 | S3 | 49 | 46 | | | | | | | | | | | | | 50x32 |
| 32-250/75 • | 75 | 10 | | 75 | 743 | 743 | 735 | 725 | 68.5 | 673 | 60 | | | | | | | | | | | | 50x32 |
| 32-2S0/110 · | 11 | 15 | | 90 | 875 | 8S3 | 82 | 79 | 75 | 72 | 6S | | | | | | | | | | | | 50x32 |
| 32-2S0/5SDc | 55 | 75 | | 79.5 | 77 | 74 | 70 | 66 | 54 | 42 | | | | | | | | | | | | | 50x32 |
| 32-250/7 SO o | 75 | 10 | | 95 | 93 | 91 | 87 | 83 | 75 | 70 | 32 | | | | | | | | | | | | 50x32 |
| 40-12 5A1 o | 1J | 15 | | 14.7 | | | | 135 | 11.S | 101 | S3 | | | | | | | | | | | | 65x40 |
| 40*12 SA 5 ® | 15 | 2 | | 18.1 | | | | 17 | 15 | 133 | 9羌 | 6 | | | | | | | | | | | 65x40 |
| 40-125/22 o | 22 | 3 | | 24.5 | | | | 232 | 21.5 | 202 | 16 | 13 | &3 | | | | | | | | | | 65x40 |
| 40-160/30 • | 3 | 4 | | 31.8 | | | | 295 | 27.S | 263 | 215 | 173 | | | | | | | | | | | 65x40 |
| 40*160/40 • | 4 | 55 | | 38 | | | | 36 | 34 | 33 | 285 | 25 | 20L1 | | | | | | | | | | 65x40 |
| 40-200/55 • | 55 | 75 | | 46 | | | | 433 | 41.3 | 401 | 3S | 30 | | | | | | | | | | | 65x40 |
| 40-200/75 • | 75 | 10 | | 57 | | | | S3^ | S1.S | 50 | 45 | 41 | 36i5 | | | | | | | | | | 65x40 |
| 40-250/92 • | 92 | 12.S | | 64 | | | | 59 | 56.S | ss | 495 | 45 | 39L8 | | | | | | | | | | 65x40 |
| 40-250/110 • | 11 | 15 | | 78 | | | | 75 | 73 | 72 | 67 | 63 | 56 | 43 | | | | | | | | | 65x40 |
| 40-250A50 · | 15 | 20 | | 88.5 | | | | 835 | 80.S | 79 | 74 | 703 | 6S | S2 | | | | | | | | | 65x40 |
| 50-125/22 • | 22 | 3 | | 17 | | | | | | | 15.4 | 14 | 128 | 11.5 | 6.S | | | | | | | | 65x50 |
| 50-125/30 · | 3 | 4 | | 20 | | | | | | | 183 | 18 | 17 | 15.6 | 11 | | | | | | | | 65x50 |
| 50-125/40 • | 4 | 55 | | 24 | | | | | | | 231 | 23 | 2L5 | 20.3 | 1S3 | 113 | | | | | | | 65x50 |
| 50-160/55 • | S3 | 75 | Mfm | 32 | | | | | | | 30石 | 30 | 28 | 26.6 | 205 | 143 | | | | | | | 65x50 |
| 50-160/75 • | 75 | 10 | | 40 | | | | | | | 38 | 37 | 36 | M.4 | 29 | 24 | 21 | | | | | | 65x50 |
| 50-200/92 • | 92 | 12.S | | 50.S | | | | | | | 463 | 4S | 43 | 40.9 | 325 | 26.7 | | | | | | | 65x50 |
| 50-200/110 • | 11 | IS | | 57.5 | | | | | | | 533 | 52 | SO | 47.5 | 40 | 弘 | 29 | | | | | | 65x50 |
| 50-200/150 • | 15 | 20 | | 62 | | | | | | | 58 | S6S | 545 | S2 | 445 | 39 | 3SS | | | | | | 65x50 |
| 50-250A50* | 15 | 20 | | 68.S | | | | | | | 64 | 63 | 61S | S9 | SO | 41 | | | | | | | 6SxS0 |
| 50-250A85 • | 18.5 | 25 | | 79 | | | | | | | 753 | 743 | 74 | 71.5 | 63S | 555 | 47 | | | | | | 65x50 |
| 50-250/220 • | 22 | 30 | | 89.5 | | | | | | | 86 | 853 | 84 | 81.5 | 735 | 65.5 | 57 | | | | | | 65x50 |
| 65-125/40 · | 4 | 5.5 | | 19 | | | | | | | | | 17.3 | 16.8 | 14.5 | 13 | 113 | | | | | | 80x65 |
| 65-125/55 • | 55 | 75 | | 23 | | | | | | | | | 2L3 | 20.9 | 19 | 175 | 16.7 | 13.7 | | | | | 80x65 |
| 65-125/75 • | 7S | 10 | | 27 | | | | | | | | | 26 | 25.6 | 24.5 | 23 | 22.5 | 20 | 18 | | | | 80x65 |
| 65-160/92 • | 92 | 12.5 | | 33 | | | | | | | | | | 31.5 | 30 | 28 | 27.1 | 24 | 215 | | | | 80x65 |
| 65-160/110 · | 11 | 15 | | 36 | | | | | | | | | | 34.5 | 33 | 31.5 | 303 | 28 | 25.5 | | | | 80x65 |
| 65-160A50 · | 15 | 20 | | 42 | | | | | | | | | | 41 | 40 | 38.5 | 373 | 35 | 33 | 29.5 | | | 80x65 |
| 65-200A50 • | 15 | 20 | | 45 | | | | | | | | | | 45.5 | 43 | 41 | 402 | 36.5 | 34 | | | | 80x65 |
| 65-200A85 • | 18.5 | 25 | | S2 | | | | | | | | | | 52.3 | 51 | 49 | 482 | 44.5 | 42 | | | | 80x65 |
| 65-200/220 • | 22 | 30 | | 59 | | | | | | | | | | 59.5 | 58 | 56 | 55 | 52 | 49.5 | 44.5 | | | 80x65 |
| 6S-250/220 • | 22 | 30 | | M.8 | | | | | | | | | | 64.7 | 62 | 60 | 58.5 | 53 | 50 | | | | 80x65 |
| 65*250/300 • | 30 | 40 | | 80 | | | | | | | | | | 79.8 | 775 | 75.5 | 74.5 | 70 | 66 | 58 | | | 80xb5 |
| 65-250/370 · | 37 | 50 | | 92 | | | | | | | | | | 90.5 | 88.5 | 87 | 85 | 80.5 | 78 | 63 | | | 80x65 |
| 65-315/370 • | 37 | 50 | | 102 | | | | | | | | | | ^9.2 | 97 | 95 | ^4.5 | 92.4 | 90 | 83 | | | 80x65 |
| 65-315/450 · | 45 | 60 | | 112 | | | | | | | | | | 1092 | 107.7 | 1053 | 104.5 | 102.5 | 100 | 93 | 66 | | 80x65 |
| 65-315/550 · | 55 | 75 | | 122 | | | | | | | | | | U92 | 117.4 | 115.7 | 114.5 | 112.5 | 110 | 103 | 76 | | 80x65 |
| 6S-315/75O · | 75 | 100 | | 141 | | | | | | | | | | 1393 | 1373 | 135.6 | 134.5 | 1325 | 130 | 122 | % | 65.5 | 80x65 |
| 80-125/40 • | 4 | 5*5 | | 17 | | | | | | | | | l&S | 15.9 | 143 | 135 | 11.6 | 10 | 7.5 | | | | 100x80 |
| 的 12S/5S • | 55 | 75 | | 21 | | | | | | | | | 2Q5 | 20 | 19 | 18 | 16.5 | 15 | 125 | as | | | 100x80 |
| 80-125/75 • | 7S | 10 | | 26 | | | | | | | | | 25 | 25 | 24.5 | 233 | 22.5 | 21.5 | 19.5 | 16.5 | | | 100x80 |

° = PST available ⁹ =PS available ⁹=PST&PS availsble/d/spon/b/e

# Technical Data

60Hz n=3500 1/min

| MODEL MODELO | Power Potencia | | US 9pm | Q^DEUVERY/ CAUDAL | | | | | | | | | | | | | | | | | | DN |
|---|---|---|---|---|---|---|---|---|---|---|---|---|---|---|---|---|---|---|---|---|---|---|
| | | | | 0 | 264 | 396 | S29 | 634 | 793 | B81 | 925 | 969 | 1057 | 1233 | 1322 | 1S86 | 1762 | 2203 | 2543 | 3524 | 4405 | |
| | | | l/min | 0 | 1000 | 1SOO | 2000 | 2400 | 3000 | 3333 | 3500 | 3666 | 4000 | 4666 | 5000 | 6000 | 6666 | 8333 | 10000 | 1333i | xouoo | |
| | kw | hp | rrP/h | 0 | 60 | 90 | 120 | 144 | 180 | 200 | 210 | 220 | 240 | 280 | 300 | 360 | 400 | SOO | 600 | 800 | 1000 | mm |
| 80-160/U0 • | 11 | 15 | | 27 | 27 | 273 | 245 | 2L1 | 16 | | | | | | | | | | | | | 100x80 |
| 80-160/150 • | 15 | 20 | | 32.8 | 32.6 | 325 | 3Q2 | 27 | 22.1 | 185 | 16.7 | | | | | | | | | | | 100x80 |
| 80*160/135 • | 185 | 25 | | 39 | 38S | 38 | 3&7 | 33.6 | 28.8 | 253 | 23.5 | | | | | | | | | | | 100x80 |
| 80-160/220 • | 22 | 30 | | 44 | 435 | 43 | 417 | 38.6 | 33.8 | 303 | 28.5 | | | | | | | | | | | 100x80 |
| 80-200/220 • | 22 | 30 | | 48 | 47.7 | 475 | 43.5 | 392 | 32.5 | 272 | 24.5 | | | | | | | | | | | 100x80 |
| 80-200/300 • | 30 | 40 | | 60 | 59.7 | 595 | 57 | 531 | 47 | 427 | 40.5 | | | | | | | | | | | 100x80 |
| 80-250/370 • | 37 | 50 | | 71.S | 703 | 705 | 65.5 | 593 | 51 | 432 | 38.5 | | | | | | | | | | | 100x80 |
| 80-250/450 • | 45 | 60 | | 88 | S6.7 | 86 | 816 | 785 | 70.5 | 60 | 51 | | | | | | | | | | | 100x80 |
| 80-250/550 • | 55 | 75 | | 94.5 | 945 | 945 | 918 | 87 | 79.5 | 7Z1 | 68.3 | | | | | | | | | | | 100x80 |
| 80-315/450 • | 45 | 60 | | 85 | 84 | 82.6 | 82 | 78 | 68.3 | 61 | 56 | | | | | | | | | | | 100x80 |
| 80-31S/S50 • | 55 | 75 | | 98 | 97 | 95.6 | 95 | 91 | 81.3 | 74 | 69 | | | | | | | | | | | 100x80 |
| 80-315/750 • | 75 | 100 | | 124 | 123 | 12L6 | 121 | 117 | 107.3 | 100 | 95 | 90 | 808 | | | | | | | | | 100x80 |
| 80-315/900 • | 90 | 125 | | 144 | 143 | 141.6 | 141 | 137 | 127.3 | 120 | U5 | 110 | 1003 | | | | | | | | | 100x80 |
| 100-16CV1S0 • | 15 | 20 | | 35 | 335 | 325 | 30 | 273 | 24.5 | 21.5 | 20 | 183 | 15 | | | | | | | | | 125x100 |
| 100-1W185 • | 185 | 25 | | 38.5 | 37S | 365 | 34.3 | 322 | 29 | 25.7 | 24 | 22 | 18 | | | | | | | | | 125x100 |
| 100-16(y220 • | 22 | 30 | | 43 | 41 | 40 | 37.6 | 352 | 31.5 | 285 | 27 | 253 | 22 | | | | | | | | | 125x100 |
| 100-2CKV220 • | 22 | 30 | | 38.5 | 36.7 | 35.7 | 33.8 | 3L7 | 28.5 | 263 | 26 | 25 | 22.9 | 163 | 13 | | | | | | | 125x100 |
| ioo-2ocyioo • | 30 | 40 | | 44.5 | 425 | 42 | 4G2 | 383 | 36.7 | 342 | 33 | 31.7 | 29 | 21.7 | 18 | | | | | | | 125x100 |
| 100-20CV370 • | 37 | 50 | | 55 | 53 | 51 | 5(16 | 492 | 47 | 45 | 44 | 423 | 40.5 | 32名 | 29 | | | | | | | 125x100 |
| 100-2^450 • | 45 | 60 | | 65 | 65 | 64 | 63 | 61 | 58 | 56 | 55 | 533 | 50 | 39 | 33.5 | | | | | | | 125x100 |
| 100*25(V550 • | 55 | 75 | | 77 | 76 | 755 | 75 | 733 | 72 | 71.7 | 7L5 | 70.7 | 69 | 623 | 59 | | | | | | | 125x100 |
| 100-25CV7S0 • | 75 | 100 | | 91 | 91 | 905 | 89.7 | 88 | 85.5 | 84 | 83.3 | 81.5 | 78 | 7L7 | 68.5 | 48 | | | | | | 125x100 |
| 100-315/550 • | 55 | 75 | | 80 | | | 79 | 77.4 | 75 | 74 | 73.5 | 73 | 713 | 68 | 66 | 60 | | | | | | 125x100 |
| 100315/750 • | 75 | 100 | H(m) | 100 | | | 99 | 97.4 | 95 | 94 | 93.5 | 93 | 913 | 88 | &6 | 80 | | | | | | 125x100 |
| 100-31V900 • | 90 | 125 | | 118 | | | 116.5 | 114.7 | 112 | 111 | 110名 | 1105 | 10R7 | 106 | 104 | 98 | | | | | | 125x100 |
| 1OO-315/11OO • | 110 | 150 | | 138 | | | 136.5 | 1347 | 132 | 131 | 1303 | 130S | 128.7 | 126 | 124 | 118 | | | | | | 125x100 |
| 125-20(y450 · | 45 | 60 | | 39.8 | | | 39.3 | 392 | 39 | 383 | 38.9 | 383 | 375 | 35 | 34 | 28.6 | 25 | | | | | 150x125 |
| 125-200/550 • | 55 | 75 | | 49.8 | | | 49.3 | 492 | 49 | 4B.9 | 4S.9 | 433 | 47.5 | 45 | 44 | 3a6 | 35 | | | | | 150x125 |
| 125-200/750 · | 75 | 100 | | 60.8 | | | 6Q3 | 602 | 60 | 59.9 | 59.9 | 593 | 58.5 | 56 | 55 | 49.6 | 46 | | | | | 150x125 |
| 125-2S0/5S0 · | 55 | 75 | | 70 | | | 67 | 65 | 64 | 63 | 62 | 61 | 59.5 | 57 | 56 | 53 | | | | | | 150x125 |
| 125-250/750 · | 75 | 100 | | 80 | | | 77 | 75 | 74 | 73 | 72 | 71 | 693 | 671 | 662 | 63 | 585 | | | | | 150x125 |
| 125-250/900 • | 90 | 125 | | 87 | | | 84 | 82 | 81 | 80 | 79 | 78 | 77 | 74.5 | 73.5 | 7(12 | 65.7 | | | | | 150x125 |
| 125-2S0/1100 • | 110 | 150 | | 97 | | | 94 | 92 | 91 | 90 | 的 | 88 | 87 | 84.6 | 83.9 | 8a4 | 76 | | | | | 150x125 |
| 125-315/900 • | 90 | 125 | | 89 | | | | | | 87 | 86 | 85 | 837 | 81.5 | 81 | 77 | 74 | 61 | | | | 150x125 |
| 125-315/1100 • | 110 | 150 | | 103 | | | | | | 101 | 100 | 99 | 973 | 95.5 | 95 | 915 | 882 | 75.6 | | | | 150x125 |
| 121315/1320 · | 132 | 180 | | 113 | | | | | | 116 | 115 | 114 | 1125 | 1105 | 1103 | 10&5 | 1032 | 91 | | | | 150x125 |
| 125-315A600 • | 160 | 220 | | 138 | | | | | | 1363 | 1353 | 135 | 133.7 | 1315 | 131 | 127.5 | 1242 | 112 | | | | 150x125 |
| 150-200/750 · | 75 | 100 | | 50 | | | | | | | | 4B | 47S | 47.6 | 472 | 46J | 46.4 | 40.6 | 363 | 25.2 | | 200x150 |
| 150-200/900 • | 90 | 125 | | 56 | | | | | | | | 54 | 53.9 | 53.6 | 532 | 527 | 52.4 | 48 | 423 | 312 | | 200x150 |
| 150-200A100 • | 110 | 150 | | 65.2 | | | | | | | | 62 | 61.7 | 612 | 603 | 59.8 | 592 | 57.2 | 54 | 46 | | 200x150 |
| 15O-2S0A100 • | 110 | 150 | | 67 | | | | | | | | | | | 642 | 62 | 60.6 | 55.8 | 493 | 318 | | 200x150 |
| 150*250/1320 • | 132 | 180 | | 80.2 | | | | | | | | | | | 782 | 763 | 75 | 70.6 | 65 | 50.2 | 29.8 | 200x150 |
| 150-250A600 • | 160 | 220 | | 90 | | | | | | | | | | | 88.4 | 87 | 86 | 82 | 772 | 624 | 42 | 200x150 |
| 150-315A600 • | 160 | 220 | | 92 | | | | | | | | | | | 90 | 8&3 | 872 | 82.8 | 763 | 6G4 | | 200x150 |
| 150-315/2000 • | 200 | 270 | | 1U | | | | | | | | | | | 1106 | ioa7 | 107.4 | 103.4 | 982 | 814 | 6Z2 | 200x150 |
| 150-315/2500 • | 250 | 340 | | 135 | | | | | | | | | | | 135.4 | 133.7 | 132.6 | 128.6 | 1233 | 110.2 | 91 | 200x150 |

•=PS available •=PST&PS availa*bi^/disponibie*

PURITy
FIRE PUMPS

# Horizontal Water Pumps PST

## [PST]Centrifugal water pumps for Irrigation price 50HZ &60HZ All Available

### TECHNICAL DESCRIPTION

-New EN733 standard centrifugal pump

- Original design by PURITY (patented)
- Both square motor & round motor available
- YE3 high efficient motor, with protection IP55 class F
- Pump case with anti-corrosive coating
- Impeller in stainless steel AISI 304 or cast iron
- Shaft in stainless steel AISI 304 or galvanized iron
- Galvanized counter flange with bolts, nuts and gaskets
- Quality NSK bearing, wear resistance mechanical seal

# Product Description

## TECHNICAL DESCRIPTION

New EN733 standard centrifugal pump
Original design by PURITY (patented)
Both square motor & round motor available
YE3 high efficient motor, with protection IP55 class F
Pump case with anti-corrosive coating
Impeller in stainless steel AISI 304 or cast iron
Shaft in stainless steel AISI 304 or galvanized iron
Galvanized counter flange with bolts, nuts and gaskets
Quality NSK bearing, wear resistance mechanical seal

## APPLICATIONS

Suitable for use with clean water and liquids that are not chemically aggressive towards the materials from which the pump is made.
The EN733 centrifugal pumps are recommended for use in water supply, cleaning sets, pressure boosting, firefighting sets, irrigation, industrial applications, water circulation in climatisation sets, agricultural.

## USING LIMITS

Liquid temperature between -10°C and +120°C
Ambient temperature up to +50°C
Max. working pressure 16 bar
Continuous service SI

## TECHNICAL DATA / DATOS TeCNICOS 50Hz n=2900 1/min

| MODEL *MODELO* | Power *Potencis* | | US gpm | Q= DELIVERY/ *CAUDAL* | | | | | | | | | | | | | | | | | | | DN |
|---|---|---|---|---|---|---|---|---|---|---|---|---|---|---|---|---|---|---|---|---|---|---|---|
| | | | l/min | 0 | 26 | 40 | 66 | 79 | 106 | 119 | 159 | 185 | 211 | 238 | 317 | 370 | 396 | 476 | S29 | 608 | 793 | 925 | |
| | | | | 0 | 100 | 150 | 250 | 300 | 400 | 4S0 | 600 | 700 | 800 | 900 | 1200 | 1400 | 1SOO | 1800 | 2000 | 2300 | SOOO | 3SO0 | |
| | kw | hp | mTh | 0 | 6 | 9 | 15 | 18 | 24 | 27 | 36 | 42 | 48 | S4 | 72 | &4 | 90 | 108 | 120 | 138 | 180 | 210 | mm |
| 32-12 S/07 o | 0.75 | 1 | | 17.5 | 16.7 | 15 | 12 | 9 | | | | | | | | | | | | | | | 50x32 |
| 32-12S/11 o | LI | L5 | | 22 | 21 | 19.7 | 165 | 145 | 9 | | | | | | | | | | | | | | 50x32 |
| 32-160/15 • | 15 | 2 | | 25.4 | 23.7 | 22.5 | 18.5 | 153 | | | | | | | | | | | | | | | 50x32 |
| 32-160/22 • | 22 | 3 | | 31 | 29.6 | 28.5 | 24.5 | 22 | 15 | | | | | | | | | | | | | | 50x32 |
| 32-160/30 • | 3 | 4 | | 35 | 343 | 34 | 28 | 255 | 19 | 15 | | | | | | | | | | | | | 50x32 |
| 32-200/30 • | 3 | 4 | | 44.2 | 43 | 393 | 352 | 322 | 24.6 | 193 | | | | | | | | | | | | | 50x32 |
| 32-200/40 • | 4 | 55 | | 54.5 | 52 | 50 | 455 | 41.9 | 35 | 303 | | | | | | | | | | | | | 50x32 |
| 32-250/55 • | 55 | 75 | | 60 | 595 | 59 | 55 | 51 | 345 | | | | | | | | | | | | | | 50x32 |
| 32-250/7S • | 75 | 10 | | 695 | 69 | 68.5 | 66 | 63 | 53 | | | | | | | | | | | | | | 50x32 |
| 32-250/110 • | 11 | 15 | | 90 | 89.5 | 89 | 82 | 79 | 66 | | | | | | | | | | | | | | 50x32 |
| 32-250/5 SDc | 55 | 75 | | 79.5 | 74.7 | 713 | 63 | 56 | 375 | | | | | | | | | | | | | | 50x32 |
| 32-250/7 5Do | 75 | 10 | | 95 | 93 | 91 | 83 | 76 | 573 | | | | | | | | | | | | | | 50x32 |
| 40-U5/11 o | LI | 15 | | 14.7 | | | | 135 | 115 | 10.1 | 53 | | | | | | | | | | | | 65x40 |
| 40-125/15 o | 15 | 2 | | 18.1 | | | | 17 | 15 | 13.9 | 9.6 | 6 | | | | | | | | | | | 65x40 |
| 40*125/22 o | 22 | 3 | | 24.5 | | | | 232 | 2L5 | 202 | 16 | 13 | &3 | | | | | | | | | | 65x40 |
| 40-160/30 • | 3 | 4 | | 31.8 | | | | 295 | 275 | 263 | 2L5 | 175 | | | | | | | | | | | 65x40 |
| 40-160/40 • | 4 | 55 | | 38 | | | | 36 | 34 | 33 | 28.5 | 25 | 2Q1 | | | | | | | | | | 65x40 |
| 40-200/55 • | 55 | 75 | | 46 | | | | 433 | 413 | 40.1 | 35 | 30 | | | | | | | | | | | 65x40 |
| 40-200/75 • | 75 | 10 | | 57 | | | | 53.6 | 5L5 | 50 | 45 | 41 | 3&5 | | | | | | | | | | 65x40 |
| 40*250/92 • | 92 | 125 | | 64 | | | | 59 | 565 | 55 | 49.5 | 45 | 39.8 | | | | | | | | | | 65x40 |
| 40-250/110 • | 11 | 15 | | 72 | | | | 675 | 66 | 63.5 | 57S | 522 | 47 | | | | | | | | | | 65x40 |
| 40-250/150 • | 15 | 20 | | 84.5 | | | | 80 | 773 | 752 | 71 | 65 | 61 | | | | | | | | | | 65x40 |
| S0-U5/22 • | 22 | 3 | | 17 | | | | | | | 15.4 | 14 | 128 | 1L5 | 6.5 | | | | | | | | 65x50 |
| 50-125/30 · | 3 | 4 | | 20 | | | | | | | 183 | 18 | 17 | 15.6 | 11 | | | | | | | | 65x50 |
| 50-125/40 • | 4 | 55 | | 24 | | | | | | | 231 | 23 | 215 | 20.3 | 153 | 113 | | | | | | | 65x50 |
| S0-160/55 • | 55 | 75 | | 32 | | | | | | | 30.6 | 30 | 28 | 26.6 | 205 | 143 | | | | | | | 65x50 |
| 50-160/75 • | 7S | 10 | H(m) | 40 | | | | | | | 38 | 37 | 36 | 34.4 | 29 | 24 | 21 | | | | | | 65x50 |
| 50-200/92 • | 92 | 123 | | 50.5 | | | | | | | 463 | 45 | 43 | 40.9 | 325 | 26.7 | | | | | | | 65x50 |
| 50-200A10 • | 11 | 15 | | 57.5 | | | | | | | 535 | 52 | 50 | 47.5 | 40 | 34 | 29 | | | | | | 65x50 |
| 50-200/150 • | 15 | 20 | | 62 | | | | | | | 58 | 565 | 54.5 | 52 | 44.5 | 39 | 35.5 | | | | | | 65x50 |
| 5O-2S0/15O • | 15 | 20 | | 68.5 | | | | | | | 64 | 63 | 615 | 59 | 50 | 41 | | | | | | | 65x50 |
| 50-250/185 • | 18.5 | 25 | | 79 | | | | | | | 753 | 743 | 74 | 7L5 | 635 | 555 | 47 | | | | | | 65x50 |
| 50-250/220 • | 22 | 30 | | 89.5 | | | | | | | 86 | 853 | 84 | 81.5 | 735 | 655 | 57 | | | | | | 65x50 |
| 65-US/40 · | 4 | 5S | | 19 | | | | | | | | | 17.3 | 16.8 | 145 | 13 | 113 | | | | | | dOx65 |
| 65-12S/SS • | 55 | 75 | | 23 | | | | | | | | | 213 | 20.9 | 19 | 175 | 16.7 | 13.7 | | | | | 80x6S |
| 65-U5/75 • | 75 | 10 | | 27 | | | | | | | | | 26 | 25.6 | 245 | 23 | 22.5 | 20 | 18 | | | | 80x65 |
| 65-160/92 • | 92 | 125 | | 33 | | | | | | | | | | 31.5 | 30 | 28 | 27.1 | 24 | 215 | | | | 80x65 |
| 65-160/110 · | 11 | 15 | | 36 | | | | | | | | | | 34.5 | 33 | 315 | 303 | 28 | 25.5 | | | | 80x65 |
| 65-160/1 SO • | 15 | 20 | | 42 | | | | | | | | | | 41 | 40 | 385 | 373 | 35 | 33 | 29.5 | | | 80x65 |
| 65-200/150 • | 15 | 20 | | 45 | | | | | | | | | | 45.5 | 43 | 41 | 402 | 36.5 | 34 | | | | 80x65 |
| 65-200/18S • | 18.5 | 25 | | 52 | | | | | | | | | | 52.3 | 51 | 49 | 4B2 | 44.5 | 42 | | | | 80x65 |
| 65-200/220 • | 22 | 30 | | S9 | | | | | | | | | | 59.5 | 58 | 56 | 55 | 52 | 49.5 | 44.5 | | | a0x65 |
| 65-250/220 * | 22 | 30 | | 64.8 | | | | | | | | | | 64.7 | 62 | 60 | 53.5 | S3 | 50 | | | | 80x65 |
| 65-250/300 · | 30 | 40 | | 80 | | | | | | | | | | 79.8 | 775 | 755 | 74.5 | 70 | 66 | 58 | | | 80x65 |
| 65-250/370 · | 37 | 50 | | 92 | | | | | | | | | | 90.5 | 88.5 | 87 | 85 | 80.5 | 78 | 68 | | | 80x65 |
| 65-31S/3 70 · | 37 | 50 | | 102 | | | | | | | | | | 99.2 | 97 | 95 | 94.5 | 92.4 | 90 | 83 | | | 80x65 |
| 65-315/4S0* | 45 | 60 | | 112 | | | | | | | | | | 1092 | 107.7 | 1053 | 104.5 | 102.5 | 100 | 93 | 66 | | 80x65 |
| 6S-315/5S0* | 55 | 75 | | 122 | | | | | | | | | | 1192 | 117.4 | 115.7 | 114.5 | 1125 | 110 | 103 | 76 | | 80x65 |
| 65-315/750 • | 75 | 100 | | 141 | | | | | | | | | | 1393 | 1373 | 135.6 | 134.5 | 1323 | 130 | 122 | 96 | 655 | 80x65 |
| 80-125/40 • | 4 | 55 | | 17 | | | | | | | | | 1&5 | 15.9 | 143 | 135 | 11.6 | 10 | 7.5 | | | | lOOxflO |
| 80-125/55 • | 55 | 7S | | 21 | | | | | | | | | 2Q5 | 20 | 19 | 18 | 16.5 | 15 | 125 | 9LS | | | 100x80 |
| 80-125/75 • | 75 | 10 | | 26 | | | | | | | | | 25 | 25 | 245 | 233 | 22.5 | 213 | 145 | 16.5 | | | 100x80 |

°=PST available ᵉ=PS available ᵉ=PST&PS available/d/spon/b/e

## Other Sizes Can Provide On Request.

## Material Description

MATERIAL DESCRIPTION / *DESCRIPCI6N DE MATERIAL*

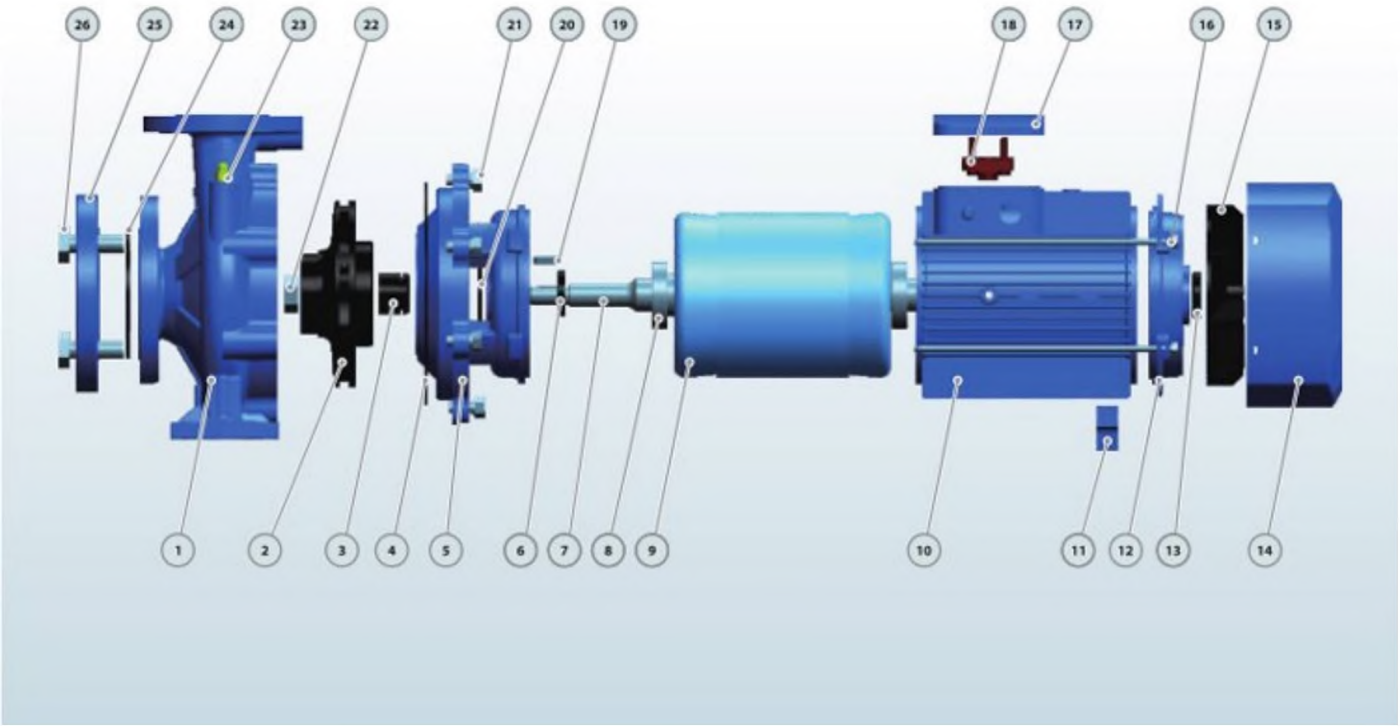


| No. | Description | Material | No. | Description | Material | No. | Description | Material |
|---|---|---|---|---|---|---|---|---|
| 1 | Pump Case | Cast iron | 10 | Motor Case | Aluminum | 19 | Impeller Key | Iron |
| 2 | Impeller | SS304/Cast iron | 11 | Support Foot | Plastic | 20 | Water Deflector | Rubber |
| 3 | Mechanical Seal | SiC/Carbon/SS304 | 12 | Back Cover | Cast iron | 21 | Connection Bolt | Steel |
| 4 | O-ring | Rubber | 13 | Reinforced Seal | Rubber | 22 | Impeller Nut | Galvanizated Steel |
| 5 | Connection | Cast iron | 14 | Fan Cover | Aluminum | 23 | Release Valve | Brass |
| 6 | Reinforced Seal | Rubber | 15 | Fan | Plastic | 24 | Gasket | Rubber |
| 7 | Shaft | SS304/45# Steel | 16 | Through Bolt | Steel | 25 | Counter Flange | Galvanizated Cast iron |
| 8 | Bearing | Ball Bearing | 17 | Terminal Box | Aluminum | 26 | Flange Bolt | Steel |
| 9 | Wound StatorRotor | Silicon Steel/Copper | 18 | Terminal Board | Plastic | | | |

# Product Description

## TECHNICAL DESCRIPTION

New EN733 standard centrifugal pump
Original design by PURITY (patented)
Both square motor & round motor available
YE3 high efficient motor, with protection IP55 class F
Pump case with anti-corrosive coating
Impeller in stainless steel AISI 304 or cast iron
Shaft in stainless steel AISI 304 or galvanized iron
Galvanized counter flange with bolts, nuts and gaskets
Quality NSK bearing, wear resistance mechanical seal

## APPLICATIONS

Suitable for use with clean water and liquids that are not chemically aggressive towards the materials from which the pump is made.
The EN733 centrifugal pumps are recommended for use in water supply, cleaning sets, pressure boosting, firefighting sets, irrigation, industrial applications, water circulation in climatisation sets, agricultural.

## USING LIMITS

Liquid temperature between -10°C and +120°C
Ambient temperature up to +50°C
Max. working pressure 16 bar
Continuous service SI

## TECHNICAL DATA

## 60Hz n=3500 1/min

| MODEL *MODELO* | Tower *Potencia* | | US gpm | Q= DELIVERY/ *CAUDAL* | | | | | | | | | | | | | | | | | | | DN |
|---|---|---|---|---|---|---|---|---|---|---|---|---|---|---|---|---|---|---|---|---|---|---|---|
| | | | | 0 | 26 | 40 | 66 | 79 | 106 | 119 | 159 | 185 | 211 | *238* | 317 | 370 | 396 | 476 | 529 | 608 | 793 | 925 | |
| | | | l/min | 0 | 100 | 150 | 250 | 300 | 400 | 4S0 | 600 | 700 | 800 | 900 | 1200 | 1400 | 1SOO | 1800 | 2000 | 2300 | SOOO | 3SO0 | |
| S | kw | hp | mTh | 0 | 6 | 9 | 15 | 18 | 24 | 27 | 36 | 42 | 48 | S4 | 72 | &4 | 90 | 108 | 120 | 138 | 180 | 210 | mm |
| 32-12 S/07 o | 0.75 | 1 | | 17.5 | 16.7 | 15 | 12 | 9 | | | | | | | | | | | | | | | 50x32 |
| 32-12S/11 o | LI | L5 | | 22 | 21 | 19.7 | 165 | 145 | 9 | | | | | | | | | | | | | | 50x32 |
| 32-160/15 • | 15 | 2 | | 25.4 | 23.7 | 22.5 | 18.5 | 153 | | | | | | | | | | | | | | | 50x32 |
| 32-160/22 • | *22* | 3 | | 31 | 29.6 | 28.5 | 24.5 | *22* | 15 | | | | | | | | | | | | | | 50x32 |
| 32-160/30 • | 3 | 4 | | 35 | 343 | 34 | 28 | 255 | 19 | 15 | | | | | | | | | | | | | 50x32 |
| 32-200/30 • | 3 | 4 | | 44.2 | 43 | 393 | 352 | 322 | 24.6 | 193 | | | | | | | | | | | | | 50x32 |
| 32-200/40 • | 4 | 55 | | 54.5 | 52 | 50 | 455 | 41.9 | 35 | 303 | | | | | | | | | | | | | 50x32 |
| 32-250/55 • | 55 | 75 | | 60 | 595 | 59 | 55 | 51 | 345 | | | | | | | | | | | | | | 50x32 |
| 32-250/7S • | 75 | 10 | | 695 | 69 | 68.5 | 66 | 63 | 53 | | | | | | | | | | | | | | 50x32 |
| 32-250/110 • | 11 | 15 | | 90 | 89.5 | 89 | 82 | 79 | 66 | | | | | | | | | | | | | | 50x32 |
| 32-250/5 SDc | 55 | 75 | | 79.5 | 74.7 | 713 | *63* | 56 | 375 | | | | | | | | | | | | | | 50x32 |
| 32-250/7 5Do | 75 | 10 | | 95 | 93 | 91 | 83 | 76 | 573 | | | | | | | | | | | | | | 50x32 |
| 40-U5/11 o | LI | 15 | | 14.7 | | | | 135 | 115 | 10.1 | 53 | | | | | | | | | | | | 65x40 |
| 4012S/1S o | 15 | 2 | | 18.1 | | | | 17 | 15 | 13.9 | 9.6 | 6 | | | | | | | | | | | 65x40 |
| 40*125/22 o | *22* | 3 | | 24.5 | | | | 232 | 2L5 | 202 | 16 | 13 | &3 | | | | | | | | | | 65x40 |
| 40-160/30 • | 3 | 4 | | 31.8 | | | | 295 | 275 | 263 | 2L5 | 175 | | | | | | | | | | | 65x40 |
| 40-160/40 • | 4 | 55 | | 38 | | | | 36 | 34 | 33 | 28.5 | 25 | 2Q1 | | | | | | | | | | 65x40 |
| 40-200/55 • | 55 | 75 | | 46 | | | | 433 | 413 | 40.1 | 35 | 30 | | | | | | | | | | | 65x40 |
| 40-200/75 • | 75 | 10 | | 57 | | | | 53.6 | 5L5 | 50 | 45 | 41 | 3&5 | | | | | | | | | | 65x40 |
| 40*250/92 • | 92 | 125 | | 64 | | | | 59 | 565 | 55 | 49.5 | 45 | 39.8 | | | | | | | | | | 65x40 |
| 40-250/110 • | 11 | 15 | | 72 | | | | 675 | 66 | 63.5 | 57S | 522 | 47 | | | | | | | | | | 65x40 |
| 40-250/150 • | 15 | 20 | | 84.5 | | | | 80 | 773 | 752 | 71 | 65 | 61 | | | | | | | | | | 65x40 |
| S0-U5/22 • | *22* | 3 | | 17 | | | | | | | 15.4 | 14 | 128 | 1L5 | 6.5 | | | | | | | | 65x50 |
| 50-125/30 · | 3 | 4 | | 20 | | | | | | | 183 | 18 | 17 | 15.6 | 11 | | | | | | | | 65x50 |
| 50-125/40 • | 4 | 55 | | 24 | | | | | | | 231 | 23 | 215 | 20.3 | 153 | 113 | | | | | | | 65x50 |
| S0-160/55 • | 55 | 75 | H(m) | 32 | | | | | | | 30.6 | 30 | 28 | 26.6 | 205 | 143 | | | | | | | 65x50 |
| 50-160/75 • | 7S | 10 | | 40 | | | | | | | 38 | 37 | 36 | 34.4 | 29 | 24 | 21 | | | | | | 65x50 |
| 50-200/92 • | 92 | 123 | | 50.5 | | | | | | | 463 | 45 | 43 | 40.9 | 325 | 26.7 | | | | | | | 65x50 |
| 50-200A10 • | 11 | 15 | | 57.5 | | | | | | | 535 | 52 | 50 | 47.5 | 40 | 34 | 29 | | | | | | 65x50 |
| 50-200/150 • | 15 | 20 | | 62 | | | | | | | 58 | 565 | 54.5 | 52 | 44.5 | 39 | 35.5 | | | | | | 65x50 |
| 5O-2S0/15O • | 15 | 20 | | 68.5 | | | | | | | 64 | 63 | 615 | 59 | 50 | 41 | | | | | | | 65x50 |
| 50-250/185 • | 18.5 | 25 | | 79 | | | | | | | 753 | 743 | 74 | 7L5 | 635 | 555 | 47 | | | | | | 65x50 |
| 50-250/220 • | *22* | 30 | | 89.5 | | | | | | | 86 | 853 | 84 | 81.5 | 735 | 655 | 57 | | | | | | 65x50 |
| 65-US/40 · | 4 | 5S | | 19 | | | | | | | | | 17.3 | 16.8 | 145 | 13 | 113 | | | | | | dOx65 |
| 65-12S/5S • | 55 | 75 | | 23 | | | | | | | | | 213 | 20.9 | 19 | 175 | 16.7 | 13.7 | | | | | 80x6S |
| 65-U5/75 • | 75 | 10 | | 27 | | | | | | | | | 26 | 25.6 | 245 | 23 | 22.5 | 20 | 18 | | | | 80x65 |
| 65-160/92 • | 92 | 125 | | 33 | | | | | | | | | | 31.5 | 30 | 28 | 27.1 | 24 | 215 | | | | 80x65 |
| 65-160/110 · | 11 | 15 | | 36 | | | | | | | | | | 34.5 | 33 | 315 | 303 | 28 | 25.5 | | | | 80x65 |
| 65-160/150 • | 15 | 20 | | 42 | | | | | | | | | | 41 | 40 | 385 | 373 | 35 | 33 | 29.5 | | | 80x65 |
| 65-200/150 • | 15 | 20 | | 45 | | | | | | | | | | 45.5 | 43 | 41 | 402 | 36.5 | 34 | | | | 80x65 |
| 65-200/18S • | 18.5 | 25 | | 52 | | | | | | | | | | 52.3 | 51 | 49 | 4B2 | 44.5 | 42 | | | | 80x65 |
| 65-200/220 • | *22* | 30 | | S9 | | | | | | | | | | 59.5 | 58 | 56 | 55 | 52 | 49.5 | 44.5 | | | d0x65 |
| 65-250/220 * | *22* | 30 | | 64.8 | | | | | | | | | | 64.7 | 62 | 60 | 53.5 | 53 | 50 | | | | 80x65 |
| 65-250/300 · | 30 | 40 | | 80 | | | | | | | | | | 79.8 | 775 | 755 | 74.5 | 70 | 66 | 58 | | | 80x65 |
| 65-250/370 · | 37 | 50 | | 92 | | | | | | | | | | 90.5 | 88.5 | 87 | 85 | 80.5 | 78 | 68 | | | 80x65 |
| 65-31S/3 70 · | 37 | 50 | | 102 | | | | | | | | | | 99.2 | 97 | 95 | 94.5 | 92.4 | 90 | 83 | | | 80x65 |
| 65-315/4S0* | 45 | 60 | | *112* | | | | | | | | | | 1092 | 107.7 | 105.8 | 104.5 | 102.5 | 100 | 93 | 66 | | 80x65 |
| 6S-315/5S0* | 55 | 75 | | 122 | | | | | | | | | | 1192 | 117.4 | 115.7 | 1145 | 1125 | 110 | 103 | 76 | | 80x65 |
| 65-315/750 • | 75 | 100 | | 141 | | | | | | | | | | 1393 | 1373 | 135.6 | 1345 | 1323 | 130 | *122* | 96 | 655 | 80x65 |
| 80-125/40 • | 4 | 55 | | 17 | | | | | | | | | 1&5 | 15.9 | 143 | 135 | 11.6 | 10 | 7.5 | | | | lOOxflO |
| 80-125/55 • | 55 | 7S | | 21 | | | | | | | | | 2Q5 | 20 | 19 | 18 | 16.5 | 15 | 125 | *9.5* | | | 100x80 |
| 80-125/75 • | 75 | 10 | | 26 | | | | | | | | | 25 | 25 | 245 | 233 | 22.5 | 213 | 145 | 16.5 | | | 100x80 |

°=PST available ᵉ=PS available ᵉ=PST&PS available/d/spon/b/e

**Other Sizes Can Provide On Request.**

## Material Description

MATERIAL DESCRIPTION / *DESCRIPCI6N DE MATERIAL*

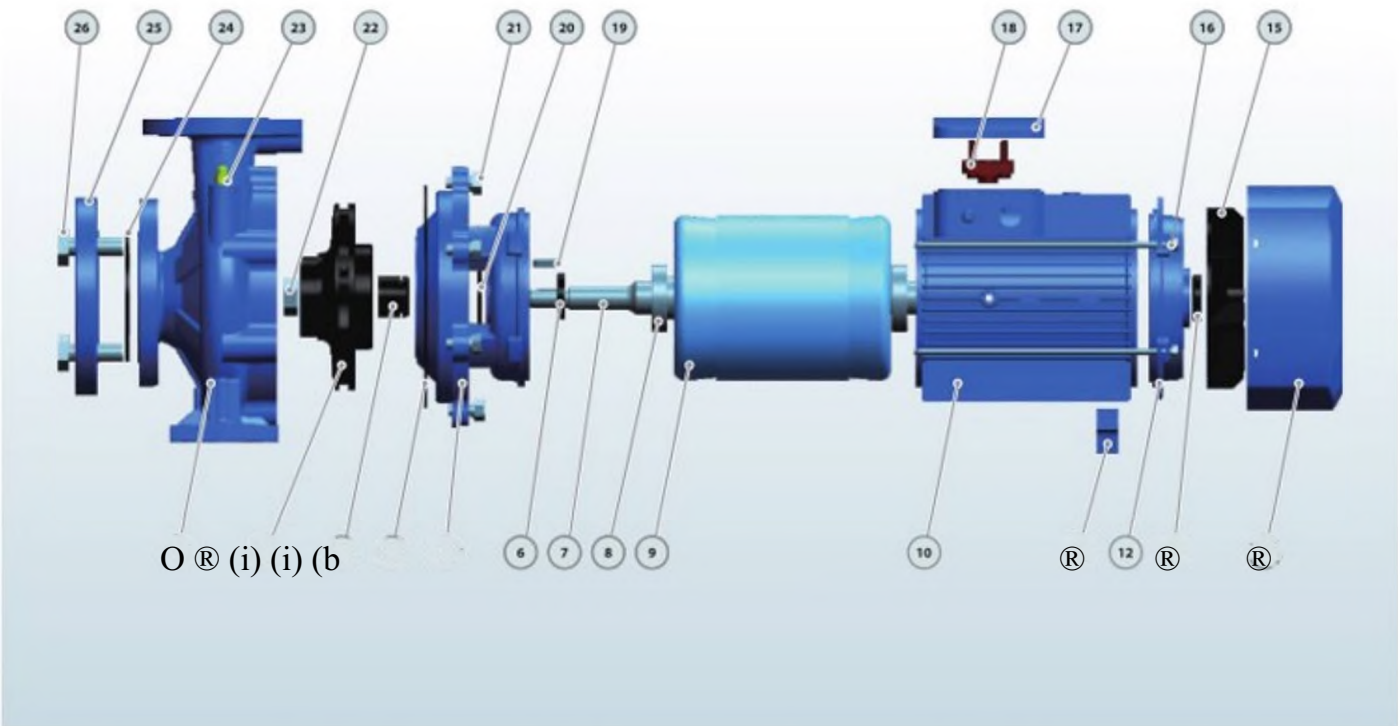


| No. | Description | Material | No. | Description | Material | No. | Description | Material |
|---|---|---|---|---|---|---|---|---|
| 1 | Pump Case | Cast iron | 10 | Motor Case | Aluminum | 19 | Impeller Key | Iron |
| 2 | Impeller | SS304/Cast iron | 11 | Support Foot | Plastic | 20 | Water Deflector | Rubber |
| 3 | Mechanical Seal | SiC/Carbon/SS304 | 12 | Back Cover | Cast iron | 21 | Connection Bolt | Steel |
| 4 | O-ring | Rubber | 13 | Reinforced Seal | Rubber | 22 | Impeller Nut | Galvanizated Steel |
| 5 | Connection | Cast iron | 14 | Fan Cover | Aluminum | 23 | Release Valve | Brass |
| 6 | Reinforced Seal | Rubber | 15 | Fan | Plastic | 24 | Gasket | Rubber |
| 7 | Shaft | SS304/45# Steel | 16 | Through Bolt | Steel | 25 | Counter Flange | Galvanizated Cast iron |
| 8 | Bearing | Ball Bearing | 17 | Terminal Box | Aluminum | 26 | Flange Bolt | Steel |
| 9 | Wound Stator/Rotor | Silicon Steel/Copper | 18 | Terminal Board | Plastic | | | |

# Horizontal Water Pumps PST B

## [PSTB]Horizontal Industrial Centrifugal Pump from Purity Pump

### TECHNICAL DESCRIPTION

-New EN733 standard centrifugal pump

- Original design by PURITY (patented)
- Both square motor & round motor available

-YE3 high efficient motor, with protection IP55 class F

-Pump case with anti-corrosive coating

- Impeller in stainless steel AISI 304 or cast iron
- Shaft in stainless steel AISI 304 or galvanized iron
- Galvanized counter flange with bolts, nuts and gaskets
- Quality NSK bearing, wear resistance mechanical seal

Product Specification (50HZ)

# Product Description

## TECHNICAL DESCRIPTION

New EN733 standard centrifugal pump
Original design by PURITY (patented)
Both square motor & round motor available
YE3 high efficient motor, with protection IP55 class F
Pump case with anti-corrosive coating
Impeller in stainless steel AISI 304 or cast iron
Shaft in stainless steel AISI 304 or galvanized iron
Galvanized counter flange with bolts, nuts and gaskets
Quality NSK bearing, wear resistance mechanical seal

## APPLICATIONS

Suitable for use with clean water and liquids that are not chemically aggressive towards the materials from which the pump is made.
The EN733 centrifugal pumps are recommended for use in water supply, cleaning sets, pressure boosting, firefighting sets, irrigation, industrial applications, water circulation in climatisation sets, agricultural.

## USING LIMITS

Liquid temperature between -10°C and +120°C
Ambient temperature up to +50°C
Max. working pressure 16 bar
Continuous service SI

TECHNICAL DATA / DATOS TéCNICOS 50Hz n=2900 1/min

| MODEL MODELO | Power Potencia | | US gpm | Q= DELIVERY/ CAUDAL | | | | | | | | | | | | | | | | | | | DN |
|---|---|---|---|---|---|---|---|---|---|---|---|---|---|---|---|---|---|---|---|---|---|---|---|
| | | | | 0 | 26 | 40 | 66 | 79 | 106 | 119 | 159 | 185 | 211 | 238 | 317 | 370 | 396 | 476 | 529 | 608 | 793 | 925 | |
| | | | l/min | 0 | 100 | 150 | 250 | 300 | 400 | 4S0 | 600 | 700 | 800 | 900 | 1200 | 1400 | 1SOO | 1800 | 2000 | 2300 | SOOO | 3SO0 | |
| I | kw | hp | mTh | 0 | 6 | 9 | 15 | 18 | 24 | 27 | 36 | 42 | 48 | S4 | 72 | d4 | 90 | 108 | 120 | 118 | 180 | 210 | mm |
| 32-12 S/07 o | 0.75 | 1 | | 17.5 | 16.7 | 15 | 12 | 9 | | | | | | | | | | | | | | | 50x32 |
| 32-12S/11 o | LI | L5 | | 22 | 21 | 19.7 | 165 | 145 | 9 | | | | | | | | | | | | | | 50x32 |
| 32-160/15 • | 15 | 2 | | 25.4 | 23.7 | 22.5 | 18.5 | 153 | | | | | | | | | | | | | | | 50x32 |
| 32-160/22 • | 22 | 3 | | 31 | 29.6 | 28.5 | 24.5 | 22 | 15 | | | | | | | | | | | | | | 50x32 |
| 32-160/30 • | 3 | 4 | | 35 | 343 | 34 | 28 | 255 | 19 | 15 | | | | | | | | | | | | | 50x32 |
| 32-200/30 • | 3 | 4 | | 44.2 | 43 | 393 | 352 | 322 | 24.6 | 193 | | | | | | | | | | | | | 50x32 |
| 32-200/40 • | 4 | 55 | | 54.5 | 52 | 50 | 455 | 41.9 | 35 | 303 | | | | | | | | | | | | | 50x32 |
| 32-250/55 • | 55 | 75 | | 60 | 595 | 59 | 55 | 51 | 345 | | | | | | | | | | | | | | 50x32 |
| 32-250/7S • | 75 | 10 | | 695 | 69 | 68.5 | 66 | 63 | 53 | | | | | | | | | | | | | | 50x32 |
| 32-250/110 • | 11 | 15 | | 90 | 89.5 | 89 | 82 | 79 | 66 | | | | | | | | | | | | | | 50x32 |
| 32-250/5 SDc | 55 | 7S | | 79.5 | 74.7 | 713 | 63 | 56 | 375 | | | | | | | | | | | | | | 50x32 |
| 32-250/7 5Do | 75 | 10 | | 95 | 93 | 91 | 83 | 76 | 573 | | | | | | | | | | | | | | 50x32 |
| 40-12S/11 o | LI | 15 | | 14.7 | | | | 135 | 115 | 10.1 | 53 | | | | | | | | | | | | 65x40 |
| 4012S/1S ° | 15 | 2 | | 18.1 | | | | 17 | 15 | 13.9 | 9.6 | 6 | | | | | | | | | | | 65x40 |
| 40*125/22 o | 22 | 3 | | 24.5 | | | | 232 | 2L5 | 202 | 16 | 13 | &3 | | | | | | | | | | 65x40 |
| 40-160/30 • | 3 | 4 | | 31.8 | | | | 295 | 275 | 263 | 2L5 | 175 | | | | | | | | | | | 65x40 |
| 40-160/40 • | 4 | 55 | | 38 | | | | 36 | 34 | 33 | 28.5 | 25 | 2Q1 | | | | | | | | | | 65x40 |
| 40-200/55 • | 55 | 75 | | 46 | | | | 433 | 413 | 40.1 | 35 | 30 | | | | | | | | | | | 65x40 |
| 40-200/75 • | 75 | 10 | | 57 | | | | 53.6 | 5L5 | 50 | 45 | 41 | 3&5 | | | | | | | | | | 65x40 |
| 40*250/92 • | 92 | 12.5 | | 64 | | | | 59 | 56.5 | 55 | 49.5 | 45 | 39.8 | | | | | | | | | | 65x40 |
| 40-250/110 • | 11 | 15 | | 72 | | | | 675 | 66 | 63.5 | 57S | 522 | 47 | | | | | | | | | | 65x40 |
| 40-250/150* | 15 | 20 | | 84.5 | | | | 80 | 773 | 752 | 71 | 65 | 61 | | | | | | | | | | 65x40 |
| S0-U5/22 • | 22 | 3 | | 17 | | | | | | | 15.4 | 14 | 128 | 1L5 | 6.5 | | | | | | | | 65x50 |
| 50-U5/30 • | 3 | 4 | | 20 | | | | | | | 183 | 18 | 17 | 15.6 | 11 | | | | | | | | 65x50 |
| 50-125/40 • | 4 | 55 | | 24 | | | | | | | 231 | 23 | 215 | 20.3 | 153 | 113 | | | | | | | 65x50 |
| S0-160/55 • | 55 | 75 | Hfm) | 32 | | | | | | | 30.6 | 30 | 28 | 26.6 | 205 | 143 | | | | | | | 65x50 |
| 50-160/75 • | 75 | 10 | | 40 | | | | | | | 38 | 37 | 36 | 34.4 | 29 | 24 | 21 | | | | | | 65x50 |
| 50-200/92 • | 92 | 125 | | 50.5 | | | | | | | 463 | 45 | 43 | 40.9 | 323 | 26.7 | | | | | | | 65x50 |
| 50-200A10 • | 11 | 15 | | 57.5 | | | | | | | 535 | 52 | 50 | 47.5 | 40 | 34 | 29 | | | | | | 65x50 |
| 50-200/150 • | 15 | 20 | | 62 | | | | | | | 58 | 565 | 54.5 | 52 | 44.5 | 39 | 35.5 | | | | | | 65x50 |
| 5O-2S0/15O • | 15 | 20 | | 68.5 | | | | | | | 64 | 63 | 615 | 59 | 50 | 41 | | | | | | | 65x50 |
| 50-250/185 • | 18.5 | 25 | | 79 | | | | | | | 753 | 743 | 74 | 7L5 | 635 | 555 | 47 | | | | | | 65x50 |
| 50-250/220 • | 22 | 30 | | 89.5 | | | | | | | 86 | 853 | 84 | 81.5 | 735 | 655 | 57 | | | | | | 65x50 |
| 65-US/40 · | 4 | 5S | | 19 | | | | | | | | | 17.3 | 16.8 | 145 | 13 | 113 | | | | | | dOx65 |
| 65-12S/5S · | 55 | 75 | | 23 | | | | | | | | | 213 | 20.9 | 19 | 175 | 16.7 | 13.7 | | | | | 80x6S |
| 65-U5/75 • | 75 | 10 | | 27 | | | | | | | | | 26 | 25.6 | 245 | 23 | 22.5 | 20 | 18 | | | | 80x65 |
| 65-160/92 • | 92 | 125 | | 33 | | | | | | | | | | 31.5 | 30 | 28 | 27.1 | 24 | 215 | | | | 80x65 |
| 65-160/110 · | 11 | 15 | | 36 | | | | | | | | | | 34.5 | 33 | 315 | 303 | 28 | 25.5 | | | | 80x65 |
| 65 160/150 • | 15 | 20 | | 42 | | | | | | | | | | 41 | 40 | 385 | 373 | 35 | 33 | 29.5 | | | 80x65 |
| 65-200/150 • | 15 | 20 | | 45 | | | | | | | | | | 45.5 | 43 | 41 | 402 | 36.5 | 34 | | | | 80x65 |
| 65-200/18S • | 18.5 | 25 | | 52 | | | | | | | | | | 52.3 | 51 | 49 | 4B2 | 44.5 | 42 | | | | 80x65 |
| 65-200/220 • | 22 | 30 | | S9 | | | | | | | | | | 59.5 | 58 | 56 | 55 | 52 | 49.5 | 44.5 | | | d0x65 |
| 65-250/220 * | 22 | 30 | | 64.8 | | | | | | | | | | 64.7 | 62 | 60 | 58.5 | 53 | 50 | | | | 80x65 |
| 65-250/300 · | 30 | 40 | | 80 | | | | | | | | | | 79.8 | 775 | 755 | 74.5 | 70 | 66 | 58 | | | 80x65 |
| 65-250/370 · | 37 | 50 | | 92 | | | | | | | | | | 90.5 | 88.5 | 87 | 85 | 80.5 | 78 | 68 | | | 80x65 |
| 65-315/370 · | 37 | 50 | | 102 | | | | | | | | | | 99.2 | 97 | 95 | 94.5 | 92.4 | 90 | 83 | | | 80x65 |
| 65-315/4S0* | 45 | 60 | | 112 | | | | | | | | | | 1092 | 107.7 | 1053 | 104.5 | 102.5 | 100 | 93 | 66 | | 80x65 |
| 6S-315/5S0* | 55 | 75 | | 122 | | | | | | | | | | 1192 | 117.4 | 115.7 | 114.5 | 1125 | 110 | 103 | 76 | | 80x65 |
| 65-315/750 • | 75 | 100 | | 141 | | | | | | | | | | 1393 | 1373 | 135.6 | 1345 | 1323 | 130 | 122 | 96 | 655 | 80x65 |
| 80-125/40 • | 4 | 55 | | 17 | | | | | | | | | 1&5 | 15.9 | 143 | 135 | 11.6 | 10 | 7.5 | | | | IOOxflO |
| 80-125/55 • | 55 | 75 | | 21 | | | | | | | | | 2Q5 | 20 | 19 | 18 | 16.5 | 15 | 125 | 9.5 | | | 100x80 |
| -80 125/75 • | 75 | 10 | | 26 | | | | | | | | | 25 | 25 | 245 | 233 | 22.5 | 213 | 145 | 16.5 | | | 100x80 |

°=PST available ⁹ =PS available •=PST8d>S available/d/spon/b/e

**Other Sizes Can Provide On Request.**

# Material Description

**MATERIAL DESCRIPTION** / *DESCRIPCI6N DE MATERIAL*

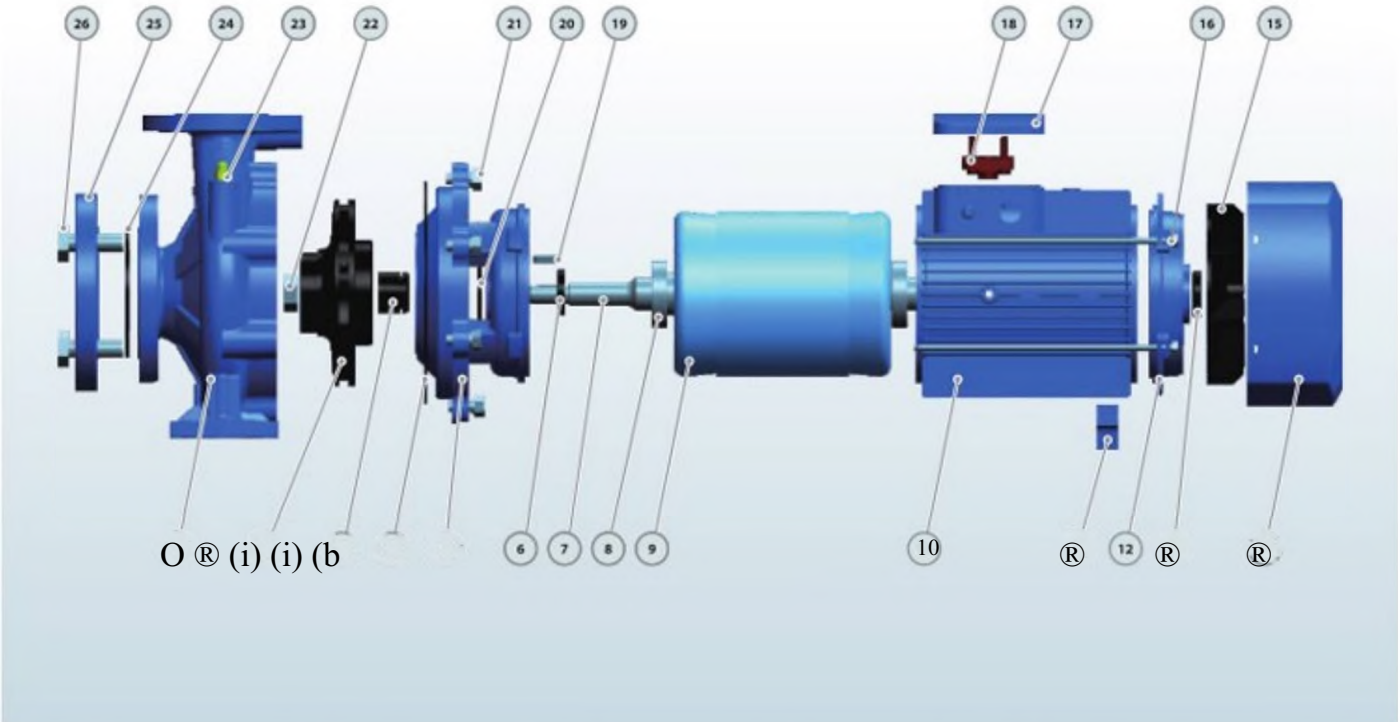


| No. | Description | Material | No. | Description | Material | No. | Description | Material |
|---|---|---|---|---|---|---|---|---|
| 1 | Pump Case | Cast iron | 10 | Motor Case | Aluminum | 19 | Impeller Key | Iron |
| 2 | Impeller | SS304/Cast iron | 11 | Support Foot | Plastic | 20 | Water Deflector | Rubber |
| 3 | Mechanical Seal | SiC/Carbon/SS304 | 12 | Back Cover | Cast iron | 21 | Connection Bolt | Steel |
| 4 | O-ring | Rubber | 13 | Reinforced Seal | Rubber | 22 | Impeller Nut | Galvanizated Steel |
| 5 | Connection | Cast iron | 14 | Fan Cover | Aluminum | 23 | Release Valve | Brass |
| 6 | Reinforced Seal | Rubber | 15 | Fan | Plastic | 24 | Gasket | Rubber |
| 7 | Shaft | SS304/45# Steel | 16 | Through Bolt | Steel | 25 | Counter Flange | Galvanizated Cast iron |
| 8 | Bearing | Ball Bearing | 17 | Terminal Box | Aluminum | 26 | Flange Bolt | Steel |
| 9 | Wound Stator/Rotor | Silicon Steel/Copper | 18 | Terminal Board | Plastic | | | |

Product Specification (60HZ)

# Product Description

## TECHNICAL DESCRIPTION

New EN733 standard centrifugal pump
Original design by PURITY (patented)
Both square motor & round motor available
YE3 high efficient motor, with protection IP55 class F
Pump case with anti-corrosive coating
Impeller in stainless steel AISI 304 or cast iron
Shaft in stainless steel AISI 304 or galvanized iron
Galvanized counter flange with bolts, nuts and gaskets
Quality NSK bearing, wear resistance mechanical seal

## APPLICATIONS

Suitable for use with clean water and liquids that are not chemically aggressive towards the materials from which the pump is made.
The EN733 centrifugal pumps are recommended for use in water supply, cleaning sets, pressure boosting, firefighting sets, irrigation, industrial applications, water circulation in climatisation sets, agricultural.

## USING LIMITS

Liquid temperature between -10°C and +120°C
Ambient temperature up to +50°C
Max. working pressure 16 bar
Continuous service SI

TECHNICAL DATA / DATOS TéCNICOS 60Hz n=3500 1/min

| MODEL MODELO | Tower Potencia | | US gpm | Q= DELIVERY/ CAUDAL | | | | | | | | | | | | | | | | | | | DN |
|---|---|---|---|---|---|---|---|---|---|---|---|---|---|---|---|---|---|---|---|---|---|---|---|
| | | | | 0 | 26 | 40 | 66 | 79 | 106 | 119 | 159 | 185 | 211 | 238 | 317 | 370 | 396 | 476 | 529 | 608 | 793 | 925 | |
| | | | l/min | 0 | 100 | 150 | 250 | 300 | 400 | 4S0 | 600 | 700 | 800 | 900 | 1200 | 1400 | 1SOO | 1800 | 2000 | 2300 | SOOO | 3SO0 | |
| I | kw | hp | mTh | 0 | 6 | 9 | 15 | 18 | 24 | 27 | 36 | 42 | 48 | S4 | 72 | d4 | 90 | 108 | 120 | 118 | 180 | 210 | mm |
| 32-12 S/07 o | 0.75 | 1 | | 17.5 | 16.7 | 15 | 12 | 9 | | | | | | | | | | | | | | | 50x32 |
| 32-12S/11 o | LI | L5 | | 22 | 21 | 19.7 | 165 | 145 | 9 | | | | | | | | | | | | | | 50x32 |
| 32-160/15 • | 15 | 2 | | 25.4 | 23.7 | 22.5 | 18.5 | 153 | | | | | | | | | | | | | | | 50x32 |
| 32-160/22 • | 22 | 3 | | 31 | 29.6 | 28.5 | 24.5 | 22 | 15 | | | | | | | | | | | | | | 50x32 |
| 32-160/30 • | 3 | 4 | | 35 | 343 | 34 | 28 | 255 | 19 | 15 | | | | | | | | | | | | | 50x32 |
| 32-200/30 • | 3 | 4 | | 44.2 | 43 | 393 | 352 | 322 | 24.6 | 193 | | | | | | | | | | | | | 50x32 |
| 32-200/40 • | 4 | 55 | | 54.5 | 52 | 50 | 455 | 41.9 | 35 | 303 | | | | | | | | | | | | | 50x32 |
| 32-250/55 • | 55 | 75 | | 60 | 595 | 59 | 55 | 51 | 345 | | | | | | | | | | | | | | 50x32 |
| 32-250/7S • | 75 | 10 | | 695 | 69 | 68.5 | 66 | 63 | 53 | | | | | | | | | | | | | | 50x32 |
| 32-250/110 • | 11 | 15 | | 90 | 89.5 | 89 | 82 | 79 | 66 | | | | | | | | | | | | | | 50x32 |
| 32-250/5 SDc | 55 | 7S | | 79.5 | 74.7 | 713 | 63 | 56 | 375 | | | | | | | | | | | | | | 50x32 |
| 32-250/7 5Do | 75 | 10 | | 95 | 93 | 91 | 83 | 76 | 573 | | | | | | | | | | | | | | 50x32 |
| 40-12S/11 o | LI | 15 | | 14.7 | | | | 135 | 115 | 10.1 | 53 | | | | | | | | | | | | 65x40 |
| 4012S/1S ° | 15 | 2 | | 18.1 | | | | 17 | 15 | 13.9 | 9.6 | 6 | | | | | | | | | | | 65x40 |
| 40*125/22 o | 22 | 3 | | 24.5 | | | | 232 | 2L5 | 202 | 16 | 13 | &3 | | | | | | | | | | 65x40 |
| 40-160/30 • | 3 | 4 | | 31.8 | | | | 295 | 275 | 263 | 2L5 | 175 | | | | | | | | | | | 65x40 |
| 40-160/40 • | 4 | 55 | | 38 | | | | 36 | 34 | 33 | 28.5 | 25 | 2Q1 | | | | | | | | | | 65x40 |
| 40-200/55 • | 55 | 75 | | 46 | | | | 433 | 413 | 40.1 | 35 | 30 | | | | | | | | | | | 65x40 |
| 40-200/75 • | 75 | 10 | | 57 | | | | 53.6 | 5L5 | 50 | 45 | 41 | 3&5 | | | | | | | | | | 65x40 |
| 40*250/92 • | 92 | 12.5 | | 64 | | | | 59 | 56.5 | 55 | 49.5 | 45 | 39.8 | | | | | | | | | | 65x40 |
| 40-250/110 • | 11 | 15 | | 72 | | | | 675 | 66 | 63.5 | 57S | 522 | 47 | | | | | | | | | | 65x40 |
| 40-250/150* | 15 | 20 | | 84.5 | | | | 80 | 773 | 752 | 71 | 65 | 61 | | | | | | | | | | 65x40 |
| S0-U5/22 • | 22 | 3 | | 17 | | | | | | | 15.4 | 14 | 128 | 1L5 | 6.5 | | | | | | | | 65x50 |
| 50-U5/30 • | 3 | 4 | | 20 | | | | | | | 183 | 18 | 17 | 15.6 | 11 | | | | | | | | 65x50 |
| 50-125/40 • | 4 | 55 | | 24 | | | | | | | 231 | 23 | 215 | 20.3 | 153 | 113 | | | | | | | 65x50 |
| S0-160/55 • | 55 | 75 | Hfm) | 32 | | | | | | | 30.6 | 30 | 28 | 26.6 | 205 | 143 | | | | | | | 65x50 |
| 50-160/75 • | 75 | 10 | | 40 | | | | | | | 38 | 37 | 36 | 34.4 | 29 | 24 | 21 | | | | | | 65x50 |
| 50-200/92 • | 92 | 125 | | 50.5 | | | | | | | 463 | 45 | 43 | 40.9 | 323 | 26.7 | | | | | | | 65x50 |
| 50-200A10 • | 11 | 15 | | 57.5 | | | | | | | 535 | 52 | 50 | 47.5 | 40 | 34 | 29 | | | | | | 65x50 |
| 50-200/150 • | 15 | 20 | | 62 | | | | | | | 58 | 565 | 54.5 | 52 | 44.5 | 39 | 35.5 | | | | | | 65x50 |
| 5O-2S0/15O • | 15 | 20 | | 68.5 | | | | | | | 64 | 63 | 615 | 59 | 50 | 41 | | | | | | | 65x50 |
| 50-250/185 • | 18.5 | 25 | | 79 | | | | | | | 753 | 743 | 74 | 7L5 | 635 | 555 | 47 | | | | | | 65x50 |
| 50-250/220 • | 22 | 30 | | 89.5 | | | | | | | 86 | 853 | 84 | 81.5 | 735 | 655 | 57 | | | | | | 65x50 |
| 65-US/40 · | 4 | 5S | | 19 | | | | | | | | | 17.3 | 16.8 | 145 | 13 | 113 | | | | | | dOx65 |
| 65-12S/5S · | 55 | 75 | | 23 | | | | | | | | | 213 | 20.9 | 19 | 175 | 16.7 | 13.7 | | | | | 80x6S |
| 65-U5/75 • | 75 | 10 | | 27 | | | | | | | | | 26 | 25.6 | 245 | 23 | 22.5 | 20 | 18 | | | | 80x65 |
| 65-160/92 • | 92 | 125 | | 33 | | | | | | | | | | 31.5 | 30 | 28 | 27.1 | 24 | 215 | | | | 80x65 |
| 65-160/110 · | 11 | 15 | | 36 | | | | | | | | | | 34.5 | 33 | 315 | 303 | 28 | 25.5 | | | | 80x65 |
| 65 160/150 • | 15 | 20 | | 42 | | | | | | | | | | 41 | 40 | 385 | 373 | 35 | 33 | 29.5 | | | 80x65 |
| 65-200/150 • | 15 | 20 | | 45 | | | | | | | | | | 45.5 | 43 | 41 | 402 | 36.5 | 34 | | | | 80x65 |
| 65-200/18S • | 18.5 | 25 | | 52 | | | | | | | | | | 52.3 | 51 | 49 | 4B2 | 44.5 | 42 | | | | 80x65 |
| 65-200/220 • | 22 | 30 | | S9 | | | | | | | | | | 59.5 | 58 | 56 | 55 | 52 | 49.5 | 44.5 | | | d0x65 |
| 65-250/220 * | 22 | 30 | | 64.8 | | | | | | | | | | 64.7 | 62 | 60 | 58.5 | 53 | 50 | | | | 80x65 |
| 65-250/300 · | 30 | 40 | | 80 | | | | | | | | | | 79.8 | 775 | 755 | 74.5 | 70 | 66 | 58 | | | 80x65 |
| 65-250/370 · | 37 | 50 | | 92 | | | | | | | | | | 90.5 | 88.5 | 87 | 85 | 80.5 | 78 | 68 | | | 80x65 |
| 65-315/370 · | 37 | 50 | | 102 | | | | | | | | | | 99.2 | 97 | 95 | 94.5 | 92.4 | 90 | 83 | | | 80x65 |
| 65-315/4S0* | 45 | 60 | | 112 | | | | | | | | | | 1092 | 107.7 | 1053 | 104.5 | 102.5 | 100 | 93 | 66 | | 80x65 |
| 6S-315/5S0* | 55 | 75 | | 122 | | | | | | | | | | 1192 | 117.4 | 115.7 | 114.5 | 1125 | 110 | 103 | 76 | | 80x65 |
| 65-315/750 • | 75 | 100 | | 141 | | | | | | | | | | 1393 | 1373 | 135.6 | 1345 | 1323 | 130 | 122 | 96 | 655 | 80x65 |
| 80-125/40 • | 4 | 55 | | 17 | | | | | | | | | 1&5 | 15.9 | 143 | 135 | 11.6 | 10 | 7.5 | | | | IOOxflO |
| 80-125/55 • | 55 | 75 | | 21 | | | | | | | | | 2Q5 | 20 | 19 | 18 | 16.5 | 15 | 125 | 9.5 | | | 100x80 |
| -80 125/75 • | 75 | 10 | | 26 | | | | | | | | | 25 | 25 | 245 | 233 | 22.5 | 213 | 145 | 16.5 | | | 100x80 |

°=PST available ⁹ =PS available •=PST8d>S available/d/spon/b/e

**Other Sizes Can Provide On Request.**

# Material Description

**MATERIAL DESCRIPTION** / *DESCRIPCI6N DE MATERIAL*

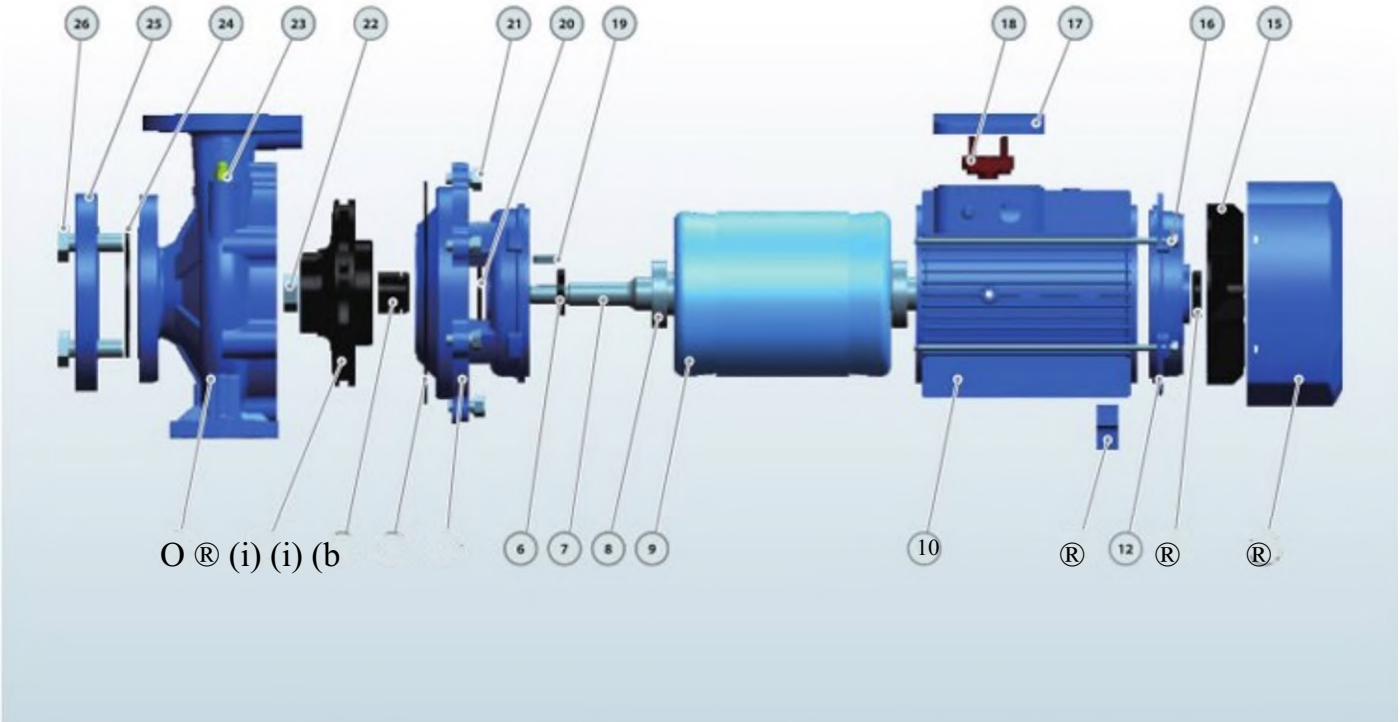


| No. | Description | Material | No. | Description | Material | No. | Description | Material |
|---|---|---|---|---|---|---|---|---|
| 1 | Pump Case | Cast iron | 10 | Motor Case | Aluminum | 19 | Impeller Key | Iron |
| 2 | Impeller | SS304/Cast iron | 11 | Support Foot | Plastic | 20 | Water Deflector | Rubber |
| 3 | Mechanical Seal | SiC/Carbon/SS304 | 12 | Back Cover | Cast iron | 21 | Connection Bolt | Steel |
| 4 | O-ring | Rubber | 13 | Reinforced Seal | Rubber | 22 | Impeller Nut | Galvanizated Steel |
| 5 | Connection | Cast iron | 14 | Fan Cover | Aluminum | 23 | Release Valve | Brass |
| 6 | Reinforced Seal | Rubber | 15 | Fan | Plastic | 24 | Gasket | Rubber |
| 7 | Shaft | SS304/45# Steel | 16 | Through Bolt | Steel | 25 | Counter Flange | Galvanizated Cast iron |
| 8 | Bearing | Ball Bearing | 17 | Terminal Box | Aluminum | 26 | Flange Bolt | Steel |
| 9 | Wound Stator/Rotor | Silicon Steel/Copper | 18 | Terminal Board | Plastic | | | |

**По вопросам продаж и поддержки обращайтесь:**

Алматы (7273)495-231
Архангельск (8182)63-90-72
Астрахань (8512)99-46-04
Барнаул (3852)73-04-60
Белгород (4722)40-23-64
Брянск (4832)59-03-52
Владивосток (423)249-28-31
Волгоград (844)278-03-48
Вологда (8172)26-41-59
Воронеж (473)204-51-73
Екатеринбург (343)384-55-89
Иваново (4932)77-34-06
Ижевск (3412)26-03-58
Иркутск (395)279-98-46
Казань (843)206-01-48
Калининград (4012)72-03-81
Калуга (4842)92-23-67
Кемерово (3842)65-04-62
Киров (8332)68-02-04
Краснодар (861)203-40-90
Красноярск (391)204-63-61
Курск (4712)77-13-04
Липецк (4742)52-20-81
Магнитогорск (3519)55-03-13
Москва (495)268-04-70
Мурманск (8152)59-64-93
Набережные Челны (8552)20-53-41
Нижний Новгород (831)429-08-12
Новокузнецк (3843)20-46-81
Новосибирск (383)227-86-73
Омск (3812)21-46-40
Орел (4862)44-53-42
Оренбург (3532)37-68-04
Пенза (8412)22-31-16
Пермь (342)205-81-47
Ростов-на-Дону (863)308-18-15
Рязань (4912)46-61-64
Самара (846)206-03-16
Санкт-Петербург (812)309-46-40
Саратов (845)249-38-78
Севастополь (8692)22-31-93
Симферополь (3652)67-13-56
Смоленск (4812)29-41-54
Сочи (862)225-72-31
Ставрополь (8652)20-65-13
Сургут (3462)77-98-35
Тверь (4822)63-31-35
Томск (3822)98-41-53
Тула (4872)74-02-29
Тюмень (3452)66-21-18
Ульяновск (8422)24-23-59
Уфа (347)229-48-12
Хабаровск (4212)92-98-04
Челябинск (351)202-03-61
Череповец (8202)49-02-64
Ярославль (4852)69-52-93

Россия (495)268-04-70
Киргизия (996)312-96-26-47
Казахстан (7172)727-132

pyt@nt-rt.ru || https://purity.nt-rt.ru/