Многоступенчатые жокей-насосы PV, GDL, PXBD, PET

Технические характеристики

По вопросам продаж и поддержки обращайтесь:

Алматы (7273)495-231
Архангельск (8182)63-90-72
Астрахань (8512)99-46-04
Барнаул (3852)73-04-60
Белгород (4722)40-23-64
Брянск (4832)59-03-52
Владивосток (423)249-28-31
Волгоград (844)278-03-48
Вологда (8172)26-41-59
Воронеж (473)204-51-73
Екатеринбург (343)384-55-89
Иваново (4932)77-34-06
Ижевск (3412)26-03-58
Иркутск (395)279-98-46
Казань (843)206-01-48
Калининград (4012)72-03-81
Калуга (4842)92-23-67
Кемерово (3842)65-04-62
Киров (8332)68-02-04
Краснодар (861)203-40-90
Красноярск (391)204-63-61
Курск (4712)77-13-04
Липецк (4742)52-20-81
Магнитогорск (3519)55-03-13
Москва (495)268-04-70
Мурманск (8152)59-64-93
Набережные Челны (8552)20-53-41
Нижний Новгород (831)429-08-12
Новокузнецк (3843)20-46-81
Новосибирск (383)227-86-73
Омск (3812)21-46-40
Орел (4862)44-53-42
Оренбург (3532)37-68-04
Пенза (8412)22-31-16
Пермь (342)205-81-47
Ростов-на-Дону (863)308-18-15
Рязань (4912)46-61-64
Самара (846)206-03-16
Санкт-Петербург (812)309-46-40
Саратов (845)249-38-78
Севастополь (8692)22-31-93
Симферополь (3652)67-13-56
Смоленск (4812)29-41-54
Сочи (862)225-72-31
Ставрополь (8652)20-65-13
Сургут (3462)77-98-35
Тверь (4822)63-31-35
Томск (3822)98-41-53
Тула (4872)74-02-29
Тюмень (3452)66-21-18
Ульяновск (8422)24-23-59
Уфа (347)229-48-12
Хабаровск (4212)92-98-04
Челябинск (351)202-03-61
Череповец (8202)49-02-64
Ярославль (4852)69-52-93

Россия (495)268-04-70
Киргизия (996)312-96-26-47
Казахстан (7172)727-132

pyt@nt-rt.ru || https://purity.nt-rt.ru/

Multistage Jockey Pumps PV

Series Multistage Fire Fighting Jockey Pump

TECHNICAL DESCRIPTION

New vertical multistage centrifugal pump

Original design by PURITY

Both square motor & round motor available

YE3 high efficient motor, with protection IP55 class F

Pump case with anti-corrosive coating

Impeller in techno-polimer

Shaft in stainless steel AISI 304 or galvanized iron

Suction and discharge port in cast iron G20 thread

Quality NSK bearing, wear resistance mechanical seal

Product Specification (50HZ)

Multistage Jockey Pump

Technical Data
Lift ranged-17BAR
Flow ranged 8m^3/h

TECHNICAL DATA

50HZ

MODEL	Flow GPM	H«ad Bar	Power hp	Jockey	Tank L
PVT25/3	25	6	3	PV 6x11/3	60
PVT35/4	35	7	4	PV 8x12/4	60
PVT50/5.5	50	7	5.5	PV 12x12/5.5	60
PVT75/7.5	75	7	7.5	PV 12x17/7.5	60
PVT100/10	100	8	10	PV 30x7/10	100
PVT125/12	125	8	12	PV 30*9/12	100
PVT1S0/15	150	8	IS	PV 30x11/15	100

60HZ

MODEL	Flow GPM	H«ad Bar	Power hp	Jockey	Tank L
PVT25/3	25	7	3	PV 6*7/3	60
PVT35/4	3S	7	4	PV 8*8/4	60
PVT50/5.5	50	8	5.5	PV 12*7/5.5	60
PVT75/7.5	75	8	7.5	PV 12*9/7 5	60
PVT100/10	100	8	10	PV 30*5/10	100
PVT125/12	125	8	12	PV 30x6/12	100
PVT150/15	150	9	15	PV 30x8/15	100

TECHNICAL DATA

50 Hz n=2900 1 /min

MODEL	Power			Q· DELIVERY																					DN
			g辟)	0	5	11	13	16	19	21	24	26	29	32	37	42	48	53	58	63	69	74	79		
			l/min	0	20	40	54)	60	70	80	90	100	110	120	140	160	180	200	220	240	260	280	300		
	kw	hp	m"h	0	1.2	2.4	3	3.6	4.2	4.8	5.4	6	6.6	7.2	8.4	9.6	10.8	12	13.2	14-4	15.6	16.8	18		mm
PV4x7/1.5	1.1	1.5		60 7	56.8	521	49	45.9	42.8	38.9	35	30.3	25.7	202											25x25
PV 4x9/2	1.5	2		78	73	67	63	59	55	50	45	39	33	26											25x25
PV 4x13/3	2.2	3		113	105	96 8	91	85.2	79.4	72.2	65	56.3	47.7	37.5											25x25
PV 4x16/4	3	4		139	130	119	112	105	97.8	88.9	80	69.3	58.7	46.2											25x2S
PV6x5/1.5	1.1	1.5		44 4				135.5	33.3	30.9	28.4	26.1	23.4	20.2	14.3	6.8									32x32
PV 6x8/2	15	2		71.1				56.7	53.2	49.5	45.5	41.8	37.5	324	22.9	10.9									32x32
PV 6x11/3	2.2	3		97.7				78	73.2	68	62.5	57.5	51.5	44.5	3L5	15									32x32
PV 6x15/4	3	4		133				106	99.8	92.7	85.2	78.4	70.2	607	43	20.5									32x32
PV8x4/1.5	1.1	1.5		36.8						30	28.4	27.2	26	24.4	21.2	17.6	13.2	92	48						40x40
PV 8x7/2	L5	2	H(m)	64.4						52.5	49.7	47.6	45.5	42.7	37.1	30.8	23.1	16.1	8.4						40x40
PV 8x9/3	2.2	3		82.8						67.S	63.9	61.2	58.5	S4.9	4 77	39.6	29.7	20.7	10.8						40x40
PV 8x12/4	3	4		110						90	85.2	81.6	78	73.2	63.6	52.8	39.6	27.6	14.4						40x40
PV 8x16/5.5	4	5.5		147						120	114	109	104	97.6	848	70.4	52.8	36.8	19.2		n				40x40
PV 12x3/1.5	LI	1.5		31								25.4	24.7	24	22.4	20.6	18.4	16.2	13.3	10.9	8.3	S.1	2		50x50
PV 12x5/2	L5	2		5L7								42.4	41.2	40	37.3	343	30.7	27	22.2	182	13.8	8.5	13		50x50
PV 12x7/3	2.2	3		72.3								59.3	57.6	56	S2.3	48.1	43	37.8	31	25.S	19.4	1L9	4.7		50x50
PV 12*9/4	3	4		93								76.2	74.1	72	67.2	618	55.2	48.6	39.9	32.8	24.9	15.4	6		50x50
PV 12x12/5.5	4	5.5		122								102	98.8	96	896	824	73.6	64.8	53.2	418	33.2	20.5	8		50x50
PV 12x17/7.5	5.5	7.5		176								144	140	136	127	117	104	91.8	75.4	62	47	29	113		50x50

MODEL	Power			Q· DELIVERY									DN
			卯m	0	26	53	79	106	132	159	185	211	
			l/min	0	100	200	300	400	500	600	700	800	
	kw	hp	m'/h	0	6	12	18	24	30	36	42	44	mm
PV 30x7/10	7.S	10		104	100	93	83	74	64	49	31	4	50x50
PV 30x9/12	9.2	12.5	H(m)	133	128	119	108	96	82	63	40	5	65x65
PV 30x11/15	n	15		163	156	14S	132	116	99	77	48	6	

60 Hz n=3450 1/min

MODEL	Power		US 9P<n	Q=DELIVERY																				DN
				0	5	11	13	16	19	21	24	26	29	32	37	42	48	53	58	63	69	74	79	
			l/min	0	20	40	50	64)	70	80	90	100	110	120	140	160	180	200	220	240	260	2B0	300	
	kw	hp	m'/h	❶	1.2	2.4	3	3.6	4.2	4.8	5.4	6	6.6	7.2	8.4	9.6	10.8	12	13.2	14.4	15.6	16.8	18	mm
PV 4x4/15	1.1	1.5		52	49	46	44	41	39	37	33	30	27	23								醞瞳	1 1	
PV 4x6/2	15	2		77	74	69	66	63	58	55	50	45	40	54										
PV 4x8/3	2.2	3		104	99	92	88	84	78	73	66	60	S3	45										
PV 4x10/4	3	4		129	124	116	110	104	97	91	83	75	66	57										
PV 4x13/5.5	4	5.5		1&8	161	ISO	143	136	126	119	108	97	86	74								1 1		
PV 4x16/7.5	5.5	7.5		206	198	185	177	167	156	146	133	119	106	91										25x25
PV 6x3/15	11	1.5		40				36	35	33	31	30	28	26	22	17		I						32x32
PV 6x5/2	L5	2		66				60	58	55	52	50	47	43	36	28								
PV 6x7/3	2.2	3		92				85	81	78	73	70	66	61	51	40		I				1	1 J	
PV 6x9/4	3	4		119				109	104	100	94	90	84	78	65	51								
PV 6x12/5.5	4	S.S		159	—	—	—	145	139	133	125	120	113	104	87	68				—				
PV 6x16/7.5	5.5	7.5		197				180	173	165	1S6	ISO	140	130	108	85								
PV 8x4/2	1.5	3	H(m)	53	—	—	—			44	42	41	灼	37	33	29	23	17	12	—			—1	
PV 8x6/3	2.2			79	—	—	—			66	64	61	59	56	50	44	35	26	18	—		—		
PV 8x8/4	3	4		105	—		—		—	88	85	82	78	74	66	58	46	34	24	—				
PV 8x10/5.5	4	5.5		132						110	106	102	98	93	83	73	58	43	30					
PV 8x13/7.5	55	7.5		171				. -J		143	138	133	127	121	108	9S	75	56	39				■1	
PV 8x17/10	7.5	10		224						187	180	173	167	158	141	124	99	73	51					
PV 12x3/2	15	2		44	—	—	—	1				43	42	41	40	38	36	33	30	27	24	20	17	40x40
PV 12x4/3	2.2	3		S9								58	57	SS	53	50	48	44	40	36	32	27	23	50x50
PV 12x5/4	3	4		73					—	—		72	71	69	66	63	60	55	50	45	40	34	29	
PV 12x7/5.5	4	5.5		102								101	99	97	92	88	84	77	70	63	56	48	40	
PV 12x9/7.5	55	75		132								130	127	124	119	113	108	99	90	81	71	61	si	
PV 12x11/10	75	10		161								159	155	152	14S	138	131	121	110	99	87	75	63	
PV 12x15/15	11	15		220	—	—	■	—		—		217	212	207	198	189	179	165	150	136	119	102	86	

MODEL	Power		US gpm	Q=DELIVERY									DN
				0	26	53	79	106	132	159	185	211	
			l/min	0	100	200	300	400	500	600	700	800	
	kw	hp	m'/h	0	6	12	18	24	30	36	42	48	mm
PV 30x5/10	7.5	10		105	100	93	86	78	67	M	36	4	50x50
PV 30x6/12	9.2	U.S	H(m)	126	120	112	103	94	80	65	44	5	6Sx6S
PV 30x8/15	11	15		168	158	149	138	124	106	86	SB	6	80x80

PRODUCT INFORMATION

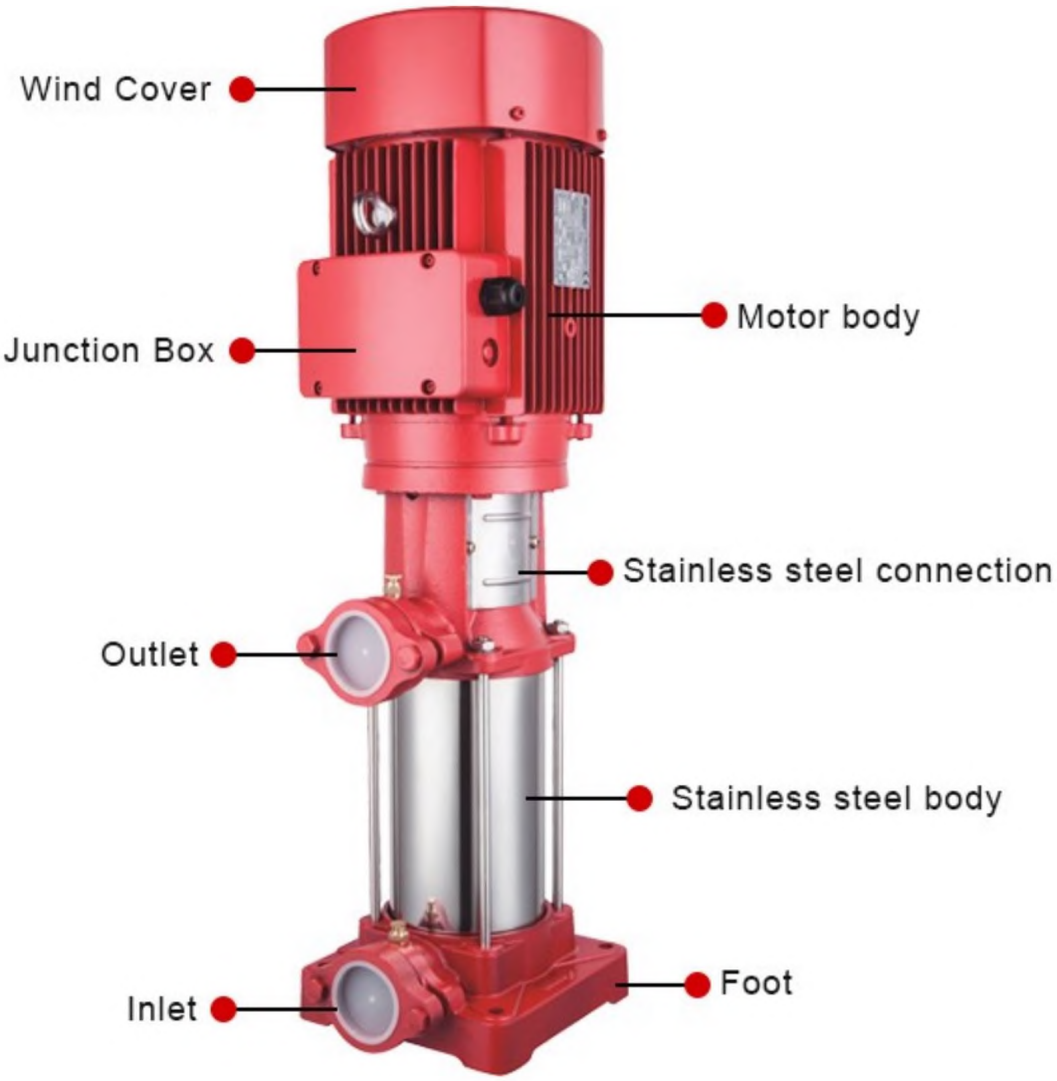

MATERIAL DESCRIPTION

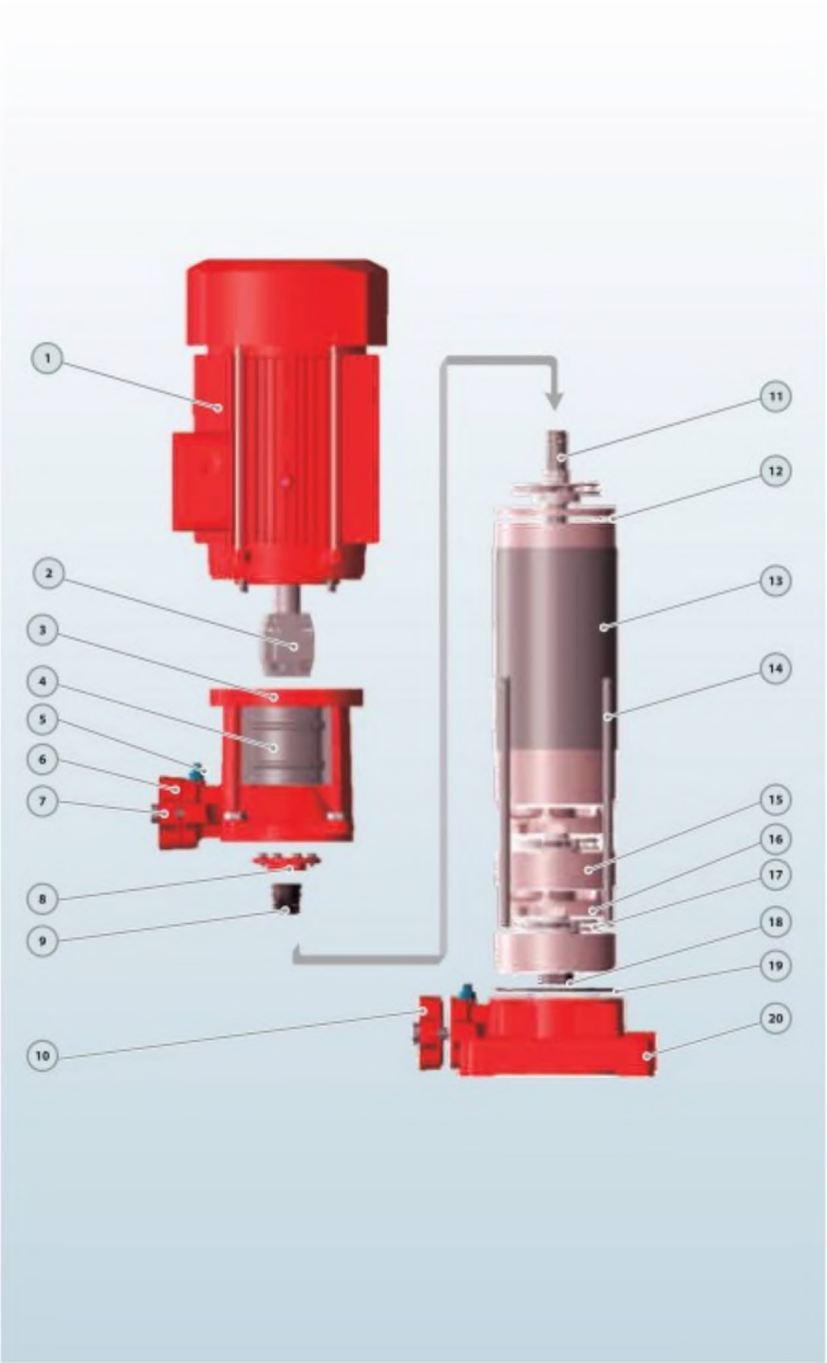

No.	Description *D99cripci6n*	Material *Materia!*
1	Motor	IP55 Class F
2	Coupling	Iron
3	Discharge Body	Cast iron
4	Cover	SS304
5	Release Valve	Brass
6	Discharge	Cast iron
7	Bolt	Steel
8	Seal Cover	Cast iron
9	Mechanical Seal	SiC/Carbon/SS304
10	Suction	Cast iron
11	Pump Shaft	SS304/45# Iron
12	DtHuser Top Cover	Tiechnopolinrier
13	Pump Cover	SS304
14	Through Bolt	Steel
15	Diffuser Cover	Technopolimer wrth SS3O4 nng
16	Diffuser	lechnopolimer wth SS3O4 hng
17	Impeller	Technopdimer
18	Impeller Nut	Gatvanizated Steel
19	Oering	Rubber
扣	Suction Body	Cast iron

Product Specification (50HZ)

Multistage Jockey Pump

Technical Data
Lift ranged-17BAR
Flow ranged 8m^3/h

TECHNICAL DATA

50HZ

MODEL	Flow GPM	H«ad Bar	Power hp	Jockey	Tank L
PVT25/3	25	6	3	PV 6x11/3	60
PVT35/4	35	7	4	PV 8x12/4	60
PVT50/5.5	50	7	5.5	PV 12x12/5.5	60
PVT75/7.5	75	7	7.5	PV 12x17/7.5	60
PVT100/10	100	8	10	PV 30x7/10	100
PVT125/12	125	8	12	PV 30*9/12	100
PVT1S0/15	150	8	IS	PV 30x11/15	100

60HZ

MODEL	Flow GPM	H«ad Bar	Power hp	Jockey	Tank L
PVT25/3	25	7	3	PV 6*7/3	60
PVT35/4	3S	7	4	PV 8*8/4	60
PVT50/5.5	50	8	5.5	PV 12*7/5.5	60
PVT75/7.5	75	8	7.5	PV 12*9/7 5	60
PVT100/10	100	8	10	PV 30*5/10	100
PVT125/12	125	8	12	PV 30x6/12	100
PVT150/15	150	9	15	PV 30x8/15	100

TECHNICAL DATA

50 Hz n=2900 1 /min

MODEL	Power			Q· DELIVERY																					DN
			g辟)	0	5	11	13	16	19	21	24	26	29	32	37	42	48	53	58	63	69	74	79		
			l/min	0	20	40	54)	60	70	80	90	100	110	120	140	160	180	200	220	240	260	280	300		
	kw	hp	m"h	0	1.2	2.4	3	3.6	4.2	4.8	5.4	6	6.6	7.2	8.4	9.6	10.8	12	13.2	14-4	15.6	16.8	18		mm
PV4x7/1.5	1.1	1.5		60 7	56.8	521	49	45.9	42.8	38.9	35	30.3	25.7	202											25x25
PV 4x9/2	1.5	2		78	73	67	63	59	55	50	45	39	33	26											25x25
PV 4x13/3	2.2	3		113	105	96 8	91	85.2	79.4	72.2	65	56.3	47.7	37.5											25x25
PV 4x16/4	3	4		139	130	119	112	105	97.8	88.9	80	69.3	58.7	46.2											25x2S
PV6x5/1.5	1.1	1.5		44 4				135.5	33.3	30.9	28.4	26.1	23.4	20.2	14.3	6.8									32x32
PV 6x8/2	15	2		71.1				56.7	53.2	49.5	45.5	41.8	37.5	324	22.9	10.9									32x32
PV 6x11/3	2.2	3		97.7				78	73.2	68	62.5	57.5	51.5	44.5	3L5	15									32x32
PV 6x15/4	3	4		133				106	99.8	92.7	85.2	78.4	70.2	607	43	20.5									32x32
PV8x4/1.5	1.1	1.5		36.8						30	28.4	27.2	26	24.4	21.2	17.6	13.2	92	48						40x40
PV 8x7/2	L5	2	H(m)	64.4						52.5	49.7	47.6	45.5	42.7	37.1	30.8	23.1	16.1	8.4						40x40
PV 8x9/3	2.2	3		82.8						67.S	63.9	61.2	58.5	S4.9	4 77	39.6	29.7	20.7	10.8						40x40
PV 8x12/4	3	4		110						90	85.2	81.6	78	73.2	63.6	52.8	39.6	27.6	14.4						40x40
PV 8x16/5.5	4	5.5		147						120	114	109	104	97.6	848	70.4	52.8	36.8	19.2		n				40x40
PV 12x3/1.5	LI	1.5		31								25.4	24.7	24	22.4	20.6	18.4	16.2	13.3	10.9	8.3	S.1	2		50x50
PV 12x5/2	L5	2		5L7								42.4	41.2	40	37.3	343	30.7	27	22.2	182	13.8	8.5	13		50x50
PV 12x7/3	2.2	3		72.3								59.3	57.6	56	S2.3	48.1	43	37.8	31	25.S	19.4	1L9	4.7		50x50
PV 12*9/4	3	4		93								76.2	74.1	72	67.2	618	55.2	48.6	39.9	32.8	24.9	15.4	6		50x50
PV 12x12/5.5	4	5.5		122								102	98.8	96	896	824	73.6	64.8	53.2	418	33.2	20.5	8		50x50
PV 12x17/7.5	5.5	7.5		176								144	140	136	127	117	104	91.8	75.4	62	47	29	113		50x50

MODEL	Power			Q· DELIVERY									DN
			卯m	0	26	53	79	106	132	159	185	211	
			l/min	0	100	200	300	400	500	600	700	800	
	kw	hp	m'/h	0	6	12	18	24	30	36	42	44	mm
PV 30x7/10	7.S	10		104	100	93	83	74	64	49	31	4	50x50
PV 30x9/12	9.2	12.5	H(m)	133	128	119	108	96	82	63	40	5	65x65
PV 30x11/15	n	15		163	156	14S	132	116	99	77	48	6	

60 Hz n=3450 1/min

MODEL	Power		US 9P<n	Q=DELIVERY																				DN
				0	5	11	13	16	19	21	24	26	29	32	37	42	48	53	58	63	69	74	79	
			l/min	0	20	40	50	64)	70	80	90	100	110	120	140	160	180	200	220	240	260	2B0	300	
	kw	hp	m'/h	❶	1.2	2.4	3	3.6	4.2	4.8	5.4	6	6.6	7.2	8.4	9.6	10.8	12	13.2	14.4	15.6	16.8	18	mm
PV 4x4/15	1.1	1.5		52	49	46	44	41	39	37	33	30	27	23								醞瞳	1 1	
PV 4x6/2	15	2		77	74	69	66	63	58	55	50	45	40	54										
PV 4x8/3	2.2	3		104	99	92	88	84	78	73	66	60	S3	45										
PV 4x10/4	3	4		129	124	116	110	104	97	91	83	75	66	57										
PV 4x13/5.5	4	5.5		1&8	161	ISO	143	136	126	119	108	97	86	74								1 1		
PV 4x16/7.5	5.5	7.5		206	198	185	177	167	156	146	133	119	106	91										25x25
PV 6x3/15	11	1.5		40				36	35	33	31	30	28	26	22	17		I						32x32
PV 6x5/2	L5	2		66				60	58	55	52	50	47	43	36	28								
PV 6x7/3	2.2	3		92				85	81	78	73	70	66	61	51	40		I				1	1 J	
PV 6x9/4	3	4		119				109	104	100	94	90	84	78	65	51								
PV 6x12/5.5	4	S.S		159	—	—	—	145	139	133	125	120	113	104	87	68				—				
PV 6x16/7.5	5.5	7.5		197				180	173	165	1S6	ISO	140	130	108	85								
PV 8x4/2	1.5	3	H(m)	53	—	—	—			44	42	41	灼	37	33	29	23	17	12	—			—1	
PV 8x6/3	2.2			79	—	—	—			66	64	61	59	56	50	44	35	26	18	—		—		
PV 8x8/4	3	4		105	—		—		—	88	85	82	78	74	66	58	46	34	24	—				
PV 8x10/5.5	4	5.5		132						110	106	102	98	93	83	73	58	43	30					
PV 8x13/7.5	55	7.5		171				. -J		143	138	133	127	121	108	9S	75	56	39				■1	
PV 8x17/10	7.5	10		224						187	180	173	167	158	141	124	99	73	51					
PV 12x3/2	15	2		44	—	—	—	1				43	42	41	40	38	36	33	30	27	24	20	17	40x40
PV 12x4/3	2.2	3		S9								58	57	SS	53	50	48	44	40	36	32	27	23	50x50
PV 12x5/4	3	4		73					—	—		72	71	69	66	63	60	55	50	45	40	34	29	
PV 12x7/5.5	4	5.5		102								101	99	97	92	88	84	77	70	63	56	48	40	
PV 12x9/7.5	55	75		132								130	127	124	119	113	108	99	90	81	71	61	si	
PV 12x11/10	75	10		161								159	155	152	14S	138	131	121	110	99	87	75	63	
PV 12x15/15	11	15		220	—	—	■	—		—		217	212	207	198	189	179	165	150	136	119	102	86	

MODEL	Power		US gpm	Q=DELIVERY									DN
				0	26	53	79	106	132	159	185	211	
			l/min	0	100	200	300	400	500	600	700	800	
	kw	hp	m'/h	0	6	12	18	24	30	36	42	48	mm
PV 30x5/10	7.5	10		105	100	93	86	78	67	M	36	4	50x50
PV 30x6/12	9.2	U.S	H(m)	126	120	112	103	94	80	65	44	5	6Sx6S
PV 30x8/15	11	15		168	158	149	138	124	106	86	SB	6	80x80

PRODUCT INFORMATION

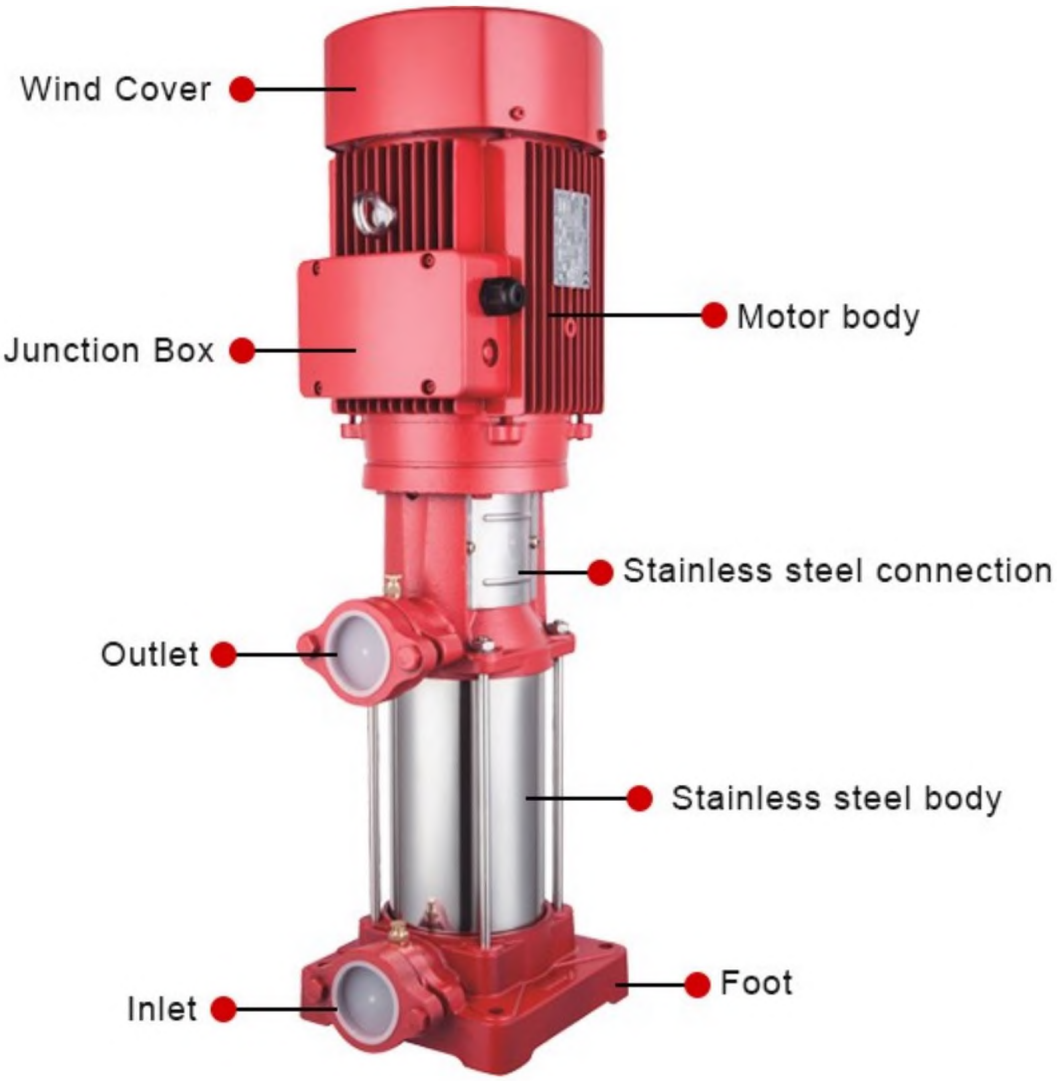

MATERIAL DESCRIPTION

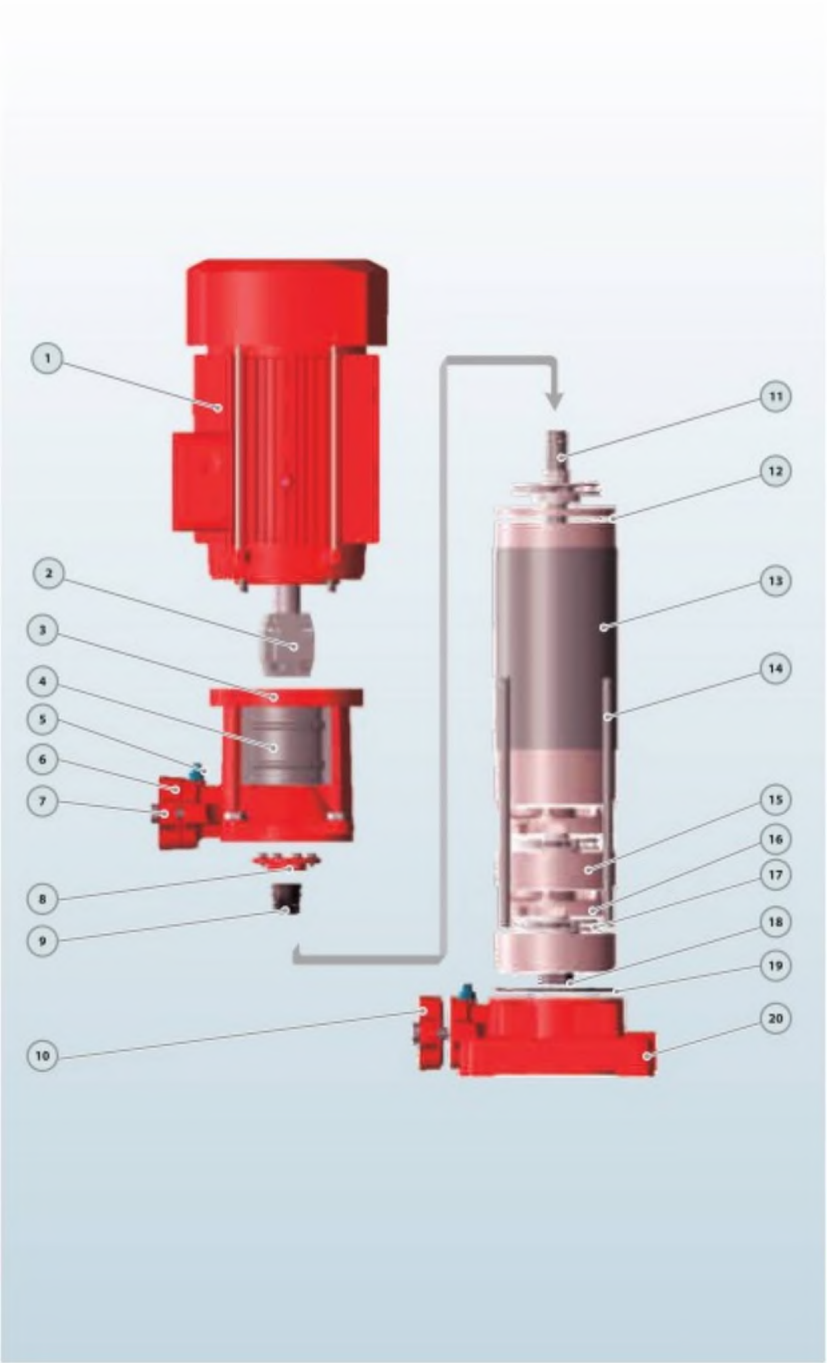

No.	Description *D99cripci6n*	Material *Materia!*
1	Motor	IP55 Class F
2	Coupling	Iron
3	Discharge Body	Cast iron
4	Cover	SS304
5	Release Valve	Brass
6	Discharge	Cast iron
7	Bolt	Steel
8	Seal Cover	Cast iron
9	Mechanical Seal	SiC/Carbon/SS304
10	Suction	Cast iron
11	Pump Shaft	SS304/45# Iron
12	DtHuser Top Cover	Tiechnopolinrier
13	Pump Cover	SS304
14	Through Bolt	Steel
15	Diffuser Cover	Technopolimer wrth SS3O4 nng
16	Diffuser	lechnopolimer wth SS3O4 hng
17	Impeller	Technopdimer
18	Impeller Nut	Gatvanizated Steel
19	Oering	Rubber
扣	Suction Body	Cast iron

Multistage Jockey Pumps PV

[PV] PV Series High Pressure Vertical Multistage Jockey Pump Philippines from Purity for Fire fighti

TECHNICAL DESCRIPTION

- New vertical multistage centrifugal pump

-Original design by PURITY

- Both square motor & round motor available
- YE3 high efficient motor, with protection IP55 class F

-Pump case with anti-corrosive coating

- Impeller in techno-polimer
- Shaft in stainless steel AISI 304 or galvanized iron
- Suction and discharge port in cast iron G20 thread
- Quality NSK bearing, wear resistance mechanical seal

Product Description

TECHNICAL DESCRIPTION
New vertical multistage centrifugal pump
Original design by PURITY
Both square motor & round motor available
YE3 high efficient motor, with protection IP55 class F
Pump case with anti-corrosive coating
Impeller in techno-polimer
Shaft in stainless steel AISI 304 or galvanized iron
Suction and discharge port in cast iron G20 thread
Quality NSK bearing, wear resistance mechanical seal

APPLICATIONS
Suitable for use with clean water and liquids that are not chemically aggressive towards the materials from which the pump is made.
The high efficiency and adaptability of these pumps to even the most unusual of applications, makes them ideal for use in the domestic, civil and industrial sectors; in particular for the distribution of water in combination with pressure sets and for pressure boosting.

USING LIMITS
Liquid temperature between -10°C and +120°C
Ambient temperature up to +50°C
Max. working pressure 25 bar
Continuous service SI

TECHNICAL DATA / *DATOS TtCNKOS*

50 Hz n=29001/min

MODEL *MODELO*	Power *Potencia*		us gpm	(^DELIVERY / *CAUDAL*																				DN
				0	5	11	13	16	19	21	24	26	29	32	37	42	48	53	58	63	69	74	79	
			Wmin	0	20	40	50	60	70	80	90	100	110	120	140	160	180	200	220	240	260	280	300	
	kw	hp	m^h	0	1«2	2-4	3	3.6	4.2	4.8	5.4	6	6.6	7.2	8.4	9.6	10.8	12	13.2	14.4	15.6	16.8	18	mm
PV4x7/1.5	1.1	1.5		60.7	56.8	52.1	49	45.9	42.8	38.9	35	30.3	25.7	20.2										25x25
PV 4x9/2	1.5	2		78	73	67	63	59	55	50	45	39	33	26										25x25
PV 4x13/3	2.2	3		113	IOS	96.8	91	85-2	79.4	72.2	6S	56.3	47.7	37.5										25x25
PV 4x16/4	3	4		139	130	119	112	105	97.8	88.9	80	69.3	58.7	46.2										25x25
PV 6* 5/1.5	1.1	1.5		44.4				1355	33.3	30.9	28.4	26.1	23.4	20.2	14.3	6.8								32x32
PV 6x8/2	1.5	2		71.1				56.7	53.2	49.5	45.5	41.8	37.5	32.4	22.9	10.9								32x32
PV 6x11/3	2.2	3		97.7				78	73.2	68	62.5	57.5	51.5	44.5	31.5	IS								32x32
PV 6x15/4	3	4		133				106	99.8	92.7	85.2	78.4	70.2	60.7	43	20.5								32x32
PV8x4/1.5	1.1	1.5		36.8						30	28.4	27.2	26	24.4	21.2	17.6	132	9.2	4.8					40x40
PV 8x7/2	1.5	2	H(m)	64.4						52.5	49.7	47.6	45.5	42.7	37.1	30.8	23.1	16.1	8.4					40x40
PV 8x9/3	2.2	3		82.8						67.5	63.9	61.2	58.5	54.9	47.7	39.6	29.7	20.7	10.8					40x40
PV 8x12/4	3	4		110						90	85.2	81.6	78	73.2	63.6	52.8	39J6	27.6	14.4					40x40
PV 8x16/5.5	4	5.5		147						120	114	109	104	97.6	84.8	70.4	523	36.8	19.2					40x40
PV 12x3/1.5	1.1	1.5		31								25.4	24.7	24	22.4	20.6	18.4	16.2	13.3	10.9	8.3	5.1	2	50x50
PV 12x5/2	1.5	2		517								42.4	41.2	40	37.3	34.3	307	27	22.2	18.2	13.8	8.5	3.3	50x50
PV 12x7/3	2.2	3		72.3								593	57.6	56	523	48.1	43	37.8	31	25.5	19.4	11.9	4.7	50x50
PV 12x9/4	3	4		93								76.2	74.1	72	67.2	61.8	S52	48.6	39.9	32.8	24.9	15.4	6	50x50
PV 12x12/5.5	4	5.5		122								102	98.8	96	89.6	82.4	73^	64.8	512	43.8	33.2	20.5	8	50x50
PV 12x17/75	5.5	7.5		176								144	140	136	127	117	104	91.8	75.4	62	47	29	11.3	50xS0

MODEL *MODELO*	Power *Potencia*		us 卯m	Q= DE LIVE RY / *CAUDAL*									DN
				0	26	53	79	106	132	159	185	211	
			t/min	0	100	200	300	400	500	600	700	800	
	kw	hp	m³/h	0	6	12	18	24	30	36	42	48	mm
PV 30x7/10	7.5	10		104	100	93	83	74	64	49	31	4	50x50
PV 30x9/12	9.2	12.5	H(m)	133	128	119	108	%	82	63	40	5	
PV 30x11/15	11	15		163	156	145	132	116	99	77	48	6	65x65

PERFORMANCE CURVE / *CURVAS DEFUNCIONAMIENTO*

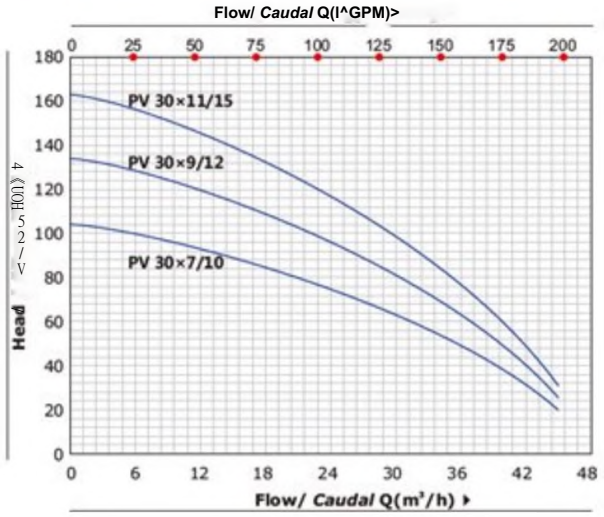

DIMENSIONS AND WEIGHT / *DIMENSIONS Y PESOS*

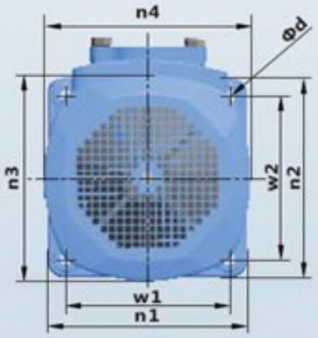

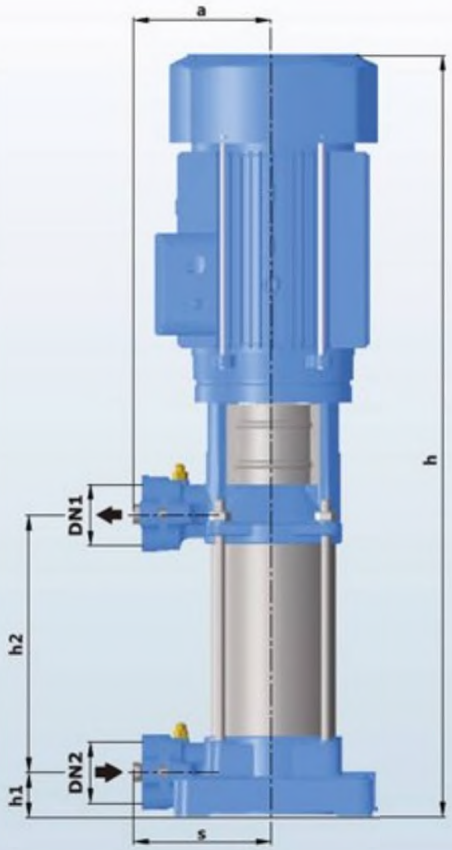

MODEL *MODELO*	DIMENSIONS / *DIMENSIONES* mm															kg	
	DN1	DN2	N	a	s	h	hi	h2	wl	w2	n1	n2	n3	n4	d	1-	3-
PV4x7/1.5	25/32	25/32	7	141	141	720	4S.S	261.5	165	16S	202	202	175	ns	12	28.0	27.0
PV 4x9/2	25/32	25/32	9	141	141	790	45.5	331.5	16S	165	202	202	175	175	12	33.0	32.0
PV 4x13/3	25/32	«/32	B	141	141	930	4S.S	471.5	16S	165	202	202	175	175	12	38.0	37.0
PV 4x16/4	25/32	25/32	16	141	141	1082	45.5	576.5	16S	165	202	202	195	19S	12	48.0	47.0
PV6x5/1.5	25/32	25/32	5	141	141	650	4S.S	191.S	165	165	202	202	175	175	12	26.0	2S.0
PV 6x8/2	25/32	25/32	8	141	141	755	45.5	296.5	16S	165	202	202	175	175	12	31.0	30.0
PV 6x11/3	25/32	25/32	11	141	141	860	45.5	401.5	165	165	202	202	175	175	12	36.0	35.0
PV 6x15/4	25/32	25/32	IS	141	141	1047	45.5	S41.5	16S	165	202	202	195	195	12	46.0	4S.0
PV8x4/1.5	40/50	40/50	4	141	141	615	4S.5	156.5	165	165	202	202	175	175	12	26.0	25.0
PV 8x7/2	40/50	40/50	7	141	141	720	45.5	261.5	16S	165	202	202	175	175	12	31.0	30.0
PV 8x9/3	40/50	40/50	9	141	141	790	4S.S	331.5	16S	16S	202	202	17S	17S	12	36.0	3S.0
PV 8x12/4	40/50	40/50	12	141	141	942	45.5	436.5	165	16S	202	202	195	195	12	46.0	4S.0
PV 8x16/5.5	40/50	40/50	16	141	141	1082	45.S	576.5	165	165	202	202	195	195	12	-	50.0
PV 12x3/L5	40/50	40/50	3	141	141	580	45.5	121.5	165	16S	202	202	175	175	12	25.0	24.0
PV 12x5/2	40/50	40/50	5	141	141	650	45.S	191.S	165	16S	202	202	175	17S	12	30.0	29.0
PV 12x7/3	40/50	40/50	7	141	141	720	45.5	261.5	165	16S	202	202	175	175	12	35.0	34.0
PV 12x9/4	40/50	40/50	9	141	141	837	45.5	331.5	165	165	202	202	195	195	12	45.0	44.0
PV 12x12/5.5	40/50	40/50	12	141	141	942	45.5	4J6.5	165	16S	202	202	195	195	12	-	50.0
PV 12x17/7.5	40/50	40/50	17	141	141	1167	45.5	611.5	16S	16S	202	202	204	204	12	-	60.0
PV 30x7/10	50/65	50/65	7	170	170	1046	62	416	187	187	230	230	260	260	12	-	86.0
PV 30x9/12	50/65	50/65	9	170	170	11S3	62	523	187	187	230	230	260	260	12	-	92.0
PV 30xII/IS	50/65	50/65	n	170	170	1260	62	630	187	187	230	230	260	260	12	-	100

Product Description

TECHNICAL DESCRIPTION
New vertical multistage centrifugal pump
Original design by PURITY
Both square motor & round motor available
YE3 high efficient motor, with protection IP55 class F
Pump case with anti-corrosive coating
Impeller in techno-polimer
Shaft in stainless steel AISI 304 or galvanized iron
Suction and discharge port in cast iron G20 thread
Quality NSK bearing, wear resistance mechanical seal

APPLICATIONS
Suitable for use with clean water and liquids that are not chemically aggressive towards the materials from which the pump is made.
The high efficiency and adaptability of these pumps to even the most unusual of applications, makes them ideal for use in the domestic, civil and industrial sectors; in particular for the distribution of water in combination with pressure sets and for pressure boosting.

USING LIMITS
Liquid temperature between -10°C and +120°C
Ambient temperature up to +50°C
Max. working pressure 25 bar
Continuous service SI

TECHNICAL DATA / *DATOS TiCNICOS* **60 Hz n=34501/min**

MODEL *MODELO*	Power *Potencia*		us gpm	Q-DELIVERY / *CAUDAL*																				DN
				0	5	11	13	16	19	21	24	26	29	32	37	42	48	53	58	63	69	74	79	
			l/min	0	20	40	50	60	70	80	90	100	110	120	140	160	180	200	220	240	260	280	300	
	kw	hp	m³/h	0	1.2	2.4	3	3.6	4.2	4.8	5.4	6	6.6	72	8.4	9.6	10.8	12	112	14.4	15.6	16.8	18	mm
PV4x4/1.5	1.1	7		52	49	46	44	41	39	37	33	30	27	23										
PV 4x6/2	1.5			77	74	69	66	63	S8	55	50	45	40	34										
PV 4x8/3	22	3		104	99	92	88	84	78	73	66	60	S3	4S										
PV 4x10/4	3	4		129	124	116	110	104	97	91	83	75	66	57										
PV 4x13/5.5	4	55		168	161	150	143	B6	126	119	108	97	86	74										
PV 4x16/7.5	55	7.5		206	198	185	177	167	156	146	133	119	106	91										2Sx2S
PV6x3/1.5	1.1	15		40				36	35	33	31	30	28	26	22	17								32x32
PV 6x5/2	1.5	2		66				60	58	5S	52	50	47	43	36	28								
PV 6x7/3	22	3		92				8S	81	78	73	70	66	61	51	40							1	
PV 6x9/4	3	4		119				109	104	100	94	90	84	78	65	51								
PV 6x12/5.5	4	S.S		159				145	139	133	125	120	113	104	87	68								
PV 6x16/7.5	5.5	7.5		197				180	173	165	1S6	150	140	130	108	85								
PV 8x4/2	IS	2	H(m)	53						44	42	41	39	37	33	29	23	17	12					
PV 8x6/3	2.2	3		79						66	64	61	59	56	50	44	35	26	18					
PV 8x8/4	3	4		105						88	85	82	78	74	66	S8	46	34	24					
PV 8x10/5.5	4	5.5		132						110	106	102	98	93	83	73	58	43	30					
PV 8x13/7.5	5.5	7.S		171						143	138	133	127	121	108	95	75	56	39					
PV 8x17/10	7.5	10		224						187	180	173	167	158	141	124	99	73	51					
PV 12x3/2	1.5	2		44								43	42	41	40	38	36	33	30	27	24	20	17	40x40
PV 12x4/3	2.2	3		59								58	57	55	S3	so	43	44	40	36	32	27	23	50x50
PV 12x5/4	3	4		73								72	71	69	66	63	60	55	SO	4S	40	34	29	
PV 12x7/5.5	4	5.5		102								101	99	97	92	88	84	77	70	63	56	48	40	
PV 12x9/7.5	5.5	75		132								130	127	124	119	113	108	99	90	81	71	61	51	
PV 12x11/10	7.5	10		161								159	155	152	145	138	131	121	110		87	7S	63	
PV 12xIS/15	11	15		220						—		217	212	207	198	189	179	165	150	136	119	102	86	

MODEL *MODELO*	Power *Potencia*		us gpm	Q-DELIVERY / *CAUDAL*									DN
				0	26	53	79	10$	132	159	185	211	
			l/min	0	100	200	300	400	500	600	700	800	
	kw	hp	mVh	0	6	12	18	24	30	36	42	48	mm
PV 30xS/10	7.5	10		105	100	93	86	78	67	S4	36	4	50x50
PV 30x6/12	92	12.5	H(m)	126	120	112	103	94	80	65	44	5	65x65
PV 30x8/15	11	15		168	1S8	149	138	124	106	86	S3	6	80x80

PERFORMANCE CURVE / *CURVAS DEFUNCIONAMIENTO*

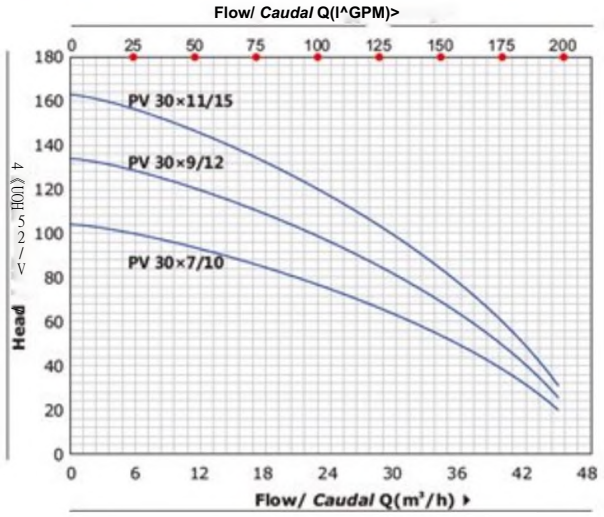

DIMENSIONS AND WEIGHT / *DIMENSIONS Y PESOS*

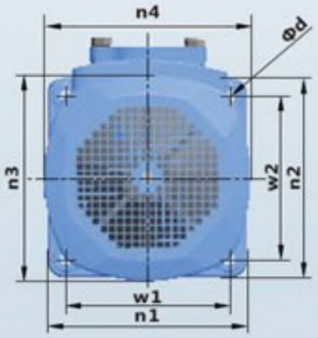

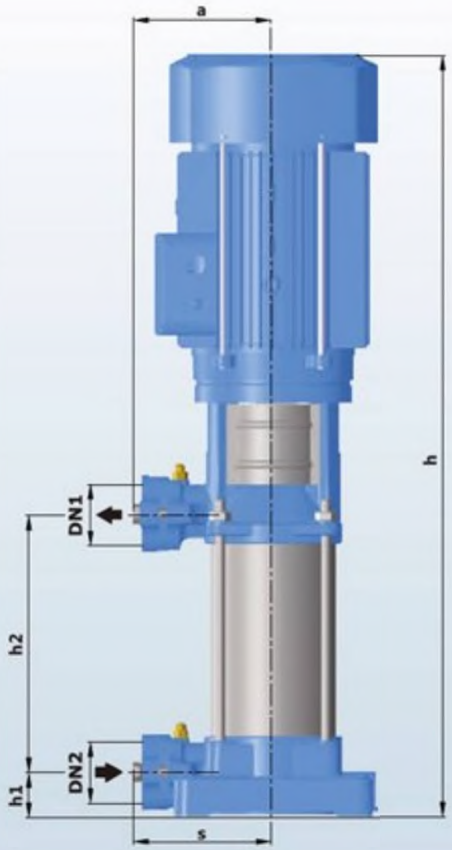

MODEL *MODELO*	DIMENSIONS / *DIMENSIONES* mm															kg	
	DN1	DN2	N	a	s	h	hi	h2	wl	w2	n1	n2	n3	n4	d	1-	3-
PV4x7/1.5	25/32	25/32	7	141	141	720	4S.S	261.5	165	16S	202	202	175	ns	12	28.0	27.0
PV 4x9/2	25/32	25/32	9	141	141	790	45.5	331.5	16S	165	202	202	175	175	12	33.0	32.0
PV 4x13/3	25/32	«/32	B	141	141	930	4S.S	471.5	16S	165	202	202	175	175	12	38.0	37.0
PV 4x16/4	25/32	25/32	16	141	141	1082	45.5	576.5	16S	165	202	202	195	19S	12	48.0	47.0
PV6x5/1.5	25/32	25/32	5	141	141	650	4S.S	191.S	165	165	202	202	175	175	12	26.0	2S.0
PV 6x8/2	25/32	25/32	8	141	141	755	45.5	296.5	16S	165	202	202	175	175	12	31.0	30.0
PV 6x11/3	25/32	25/32	11	141	141	860	45.5	401.5	165	165	202	202	175	175	12	36.0	35.0
PV 6x15/4	25/32	25/32	IS	141	141	1047	45.5	S41.5	16S	165	202	202	195	195	12	46.0	4S.0
PV8x4/1.5	40/50	40/50	4	141	141	615	4S.5	156.5	165	165	202	202	175	175	12	26.0	25.0
PV 8x7/2	40/50	40/50	7	141	141	720	45.5	261.5	16S	165	202	202	175	175	12	31.0	30.0
PV 8x9/3	40/50	40/50	9	141	141	790	4S.S	331.5	16S	16S	202	202	17S	17S	12	36.0	3S.0
PV 8x12/4	40/50	40/50	12	141	141	942	45.5	436.5	165	16S	202	202	195	195	12	46.0	4S.0
PV 8x16/5.5	40/50	40/50	16	141	141	1082	45.S	576.5	165	165	202	202	195	195	12	-	50.0
PV 12x3/L5	40/50	40/50	3	141	141	580	45.5	121.5	165	16S	202	202	175	175	12	25.0	24.0
PV 12x5/2	40/50	40/50	5	141	141	650	45.S	191.S	165	16S	202	202	175	17S	12	30.0	29.0
PV 12x7/3	40/50	40/50	7	141	141	720	45.5	261.5	165	16S	202	202	175	175	12	35.0	34.0
PV 12x9/4	40/50	40/50	9	141	141	837	45.5	331.5	165	165	202	202	195	195	12	45.0	44.0
PV 12x12/5.5	40/50	40/50	12	141	141	942	45.5	4J6.5	165	16S	202	202	195	195	12	-	50.0
PV 12x17/7.5	40/50	40/50	17	141	141	1167	45.5	611.5	16S	16S	202	202	204	204	12	-	60.0
PV 30x7/10	50/65	50/65	7	170	170	1046	62	416	187	187	230	230	260	260	12	-	86.0
PV 30x9/12	50/65	50/65	9	170	170	11S3	62	523	187	187	230	230	260	260	12	-	92.0
PV 30xII/IS	50/65	50/65	n	170	170	1260	62	630	187	187	230	230	260	260	12	-	100

Multistage Jockey Pumps GDL

[GDL]Inline Booster Water Pump Centrifugal Pump from PURITY

TECHNICAL DESCRIPTION

- New vertical multistage centrifugal pump
- Original design by PURITY
- Both square motor & round motor available
- YE3 high efficient motor, with protection IP55 class F

-Pump case with anti-corrosive coating

- Shaft in stainless steel AISI 304 or galvanized iron
- Suction and discharge port in cast iron G20 thread
- Quality NSK bearing, wear resistance mechanical seal

Product Description

TECHNICAL DESCRIPTION

New vertical multistage centrifugal pump
Original design by PURITY
Both square motor & round motor available
YE3 high efficient motor, with protection IP55 class F
Pump case with anti-corrosive coating
Shaft in stainless steel AISI 304 or galvanized iron
Suction and discharge port in cast iron G20 thread
Quality NSK bearing, wear resistance mechanical seal

APPLICATIONS

Suitable for use with clean water and liquids that are not chemically aggressive towards the materials from which the pump is made.
The high efficiency and adaptability of these pumps to even the most unusual of applications, makes them ideal for use in the domestic, civil and industrial sectors; in particular for the distribution of water in combination with pressure sets and for pressure boosting.

USING LIMITS

Medium temperature: -15°C~+120°C
Maximum working pressure: 2.5MPa
Ambient temperature: ≤±40°C

Technical parameters :

Type	Flow		Pressure (Mpa)	Power (kw)	speed (r/min)	Pipe diameter (mm)
	L/S	m³/h				
25GDL2-12X3	0.56	2	36	1.1	3000	25
25GDL2-12X4	0.56	2	48	1.1	3000	25
25GDL2-12X5	0.56	2	60	1.5	3000	25
25GDL2-12X6	0.56	2	72	1.5	3000	25
25GDL2-12X7	0.S6	2	84	2.2	3000	25
25GDL2-12X8	0.56	2	96	2.2	3000	25
25GDL2-12X9	0.&6	2	108	2.2	3000	25
25GDL2-12X10	0.56	2	120	3	3000	25
25GDL2-12X11	0.56	2	132	3	3000	25
25GDL2-12X12	0.56	2	144	3	3000	25
25GDL2-12X13	0.56	2	156	4	3000	25
25GDL2-12X14	0.&6	2	168	4	3000	25
25GDL2-12X15	0.&6	2	180	4	3000	25
25GDL4-11X3	1.11	4	33	1.1	3000	25
25GDL4-11X4	1.11	4	44	1.5	3000	25
25GDL4-11X5	1.11	4	55	2.2	3000	25
25GDL4-11X6	1.11	4	66	2.2	3000	25
25GDL4-11X7	1.11	4	77	3	3000	25
25GDL4-11X8	1.11	4	88	3	3000	25
25GDL4-11X9	1.11	4	99	3	3000	25
25GDL4-11X10	1.11	4	110	4	3000	25
25GDL4-11X11	1.11	4	121	4	3000	25
25GDL4-11X12	1.11	4	132	4	3000	25
25GDL4-11X13	1.11	4	143	4	3000	25
25GDL4-11X14	1.11	4	154	5.5	3000	25
25GDL4-11X15	1.11	4	165	5.5	3000	25
40GDL6-12X2	1.67	6	24	1.5	3000	40
40GDL6-12X3	1.67	6	36	1.5	3000	40

Technical parameters :

Type	Flow		Pressure (Mpa)	Power (kw)	speed (r/min)	Pipe diameter (mm)
	Us	m³/h				
40GDL6-12X4	1.67	6	48	2.2	3000	40
40GDL6-12X5	1.67	6	60	2.2	3000	40
40GDL6-12X6	1.67	6	72	3	3000	40
40GDL6-12X7	1.67	6	84	3	3000	40
40GDL6-12X8	1.67	6	96	4	3000	40
40GDL6-12X9	1.67	6	108	4	3000	40
40GDL6-12X10	1.67	6	120	4	3000	40
40GDL6-12X11	1.67	6	132	5.5	3000	40
40GDL6-12X12	1.67	6	144	5.5	3000	40
40GDL6-12X13	1.67	6	156	7.5	3000	40
40GDL6-12X14	1.67	6	168	7.5	3000	40
40GDL6-12X15	1.67	6	180	7.5	3000	40
50GDL12-15X2	3.33	12	30	2.2	3000	50
50GDL12-15X3	3.33	12	45	3	3000	50
50GDL12-15X4	3.33	12	60	4	3000	50
50GDL12-15X5	3.33	12	75	5.5	3000	50
50GDL12-15X6	3.33	12	90	5.5	3000	50
50GDL12-15X7	3.33	12	105	7.5	3000	50
50GDL12-15X8	3.33	12	120	7.5	3000	50
50GDL12-15X9	3.33	12	135	11	3000	50
50GDL12-15X10	3.33	12	150	11	3000	50
50GDL12-1SX11	3.33	12	165	15	3000	50
50GDL12-15X12	3.33	12	180	15	3000	50
50GDL18-15X2	5	18	30	3	3000	50
50GDL18-15X3	5	18	45	4	3000	50
50GDL18-15X4	5	18	60	5.5	3000	50
50GDL18-15X5	5	18	75	7.5	3000	50
50GDL18-15X6	5	18	90	7.5	3000	50
50GDL18-15X7	5	18	105	11	3000	50
50GDL18-15X8	5	18	120	11	30G0	50
50GDL18-15X9	5	18	135	15	3000	50
50GDL18-15X10	5	18	150	15	3000	50
50GDL18-15X11	5	18	165	18.5	3000	50
50GDL18-15X12	5	18	180	18.5	3000	50
50GDL18-15X13	5	18	195	22	3000	50
65GDL24-12X2	6.67	24	24	3	3000	65
65GDL24-12X3	6.67	24	36	4	3000	65
65GDL24-12X4	6.67	24	48	5.5	3000	65
65GDL24-12X5	6.67	24	60	7.5	3000	65
65GDL24-12X6	6.67	24	72	7.5	3000	65
65GDL24-12X7	6.67	24	84	11	3000	65
65GDL24-12X8	6.67	24	96	11	3000	65
65GDL24-12X9	6.67	24	108	15	3000	65
65GDL24-12X10	6.67	24	120	15	3000	65
65GDL24-12X11	6.67	24	132	18.5	3000	65
65GDL24-12X12	6.67	24	144	18.5	3000	65
80GDL36-12X2	10	36	24	4	3000	80
80GDL36-12X3	10	36	36	5.5	30G0	80
80GDL36-12X4	10	36	48	7.5	3000	80
80GDL36-12X5	10	36	60	11	3000	80
80GDL36-12X6	10	36	72	11	3000	80
80GDL36-12X7	10	36	84	15	3000	80
80GDL36-12X8	10	36	96	15	3000	80
80GDL36-12X9	10	36	108	18.5	3000	80
80GDL36-12X10	10	36	120	18.5	3000	80

Technical parameters :

Type	Flow		Pressure (Mpa)	Power (kw)	speed (r/min)	Pipe diameter (mm)
	L/S	mVh				
80GDL36-12X11	10	36	132	22	3000	80
80GDL36-12X12	10	36	144	22	3000	80
80GDL54-14X2	15	54	28	7.5	3000	80
80GDL54-14X3	15	54	42	11	3000	80
80GDL54-14X4	15	54	56	15	3000	80
80GDL54-14X5	15	54	70	18.5	3000	80
80GDL54-14X6	15	54	84	18.5	3000	80
80GDL54-14X7	15	54	98	22	3000	80
80GDL54-14X8	15	54	112	30	3000	80
80GDL54-14X9	15	54	126	30	3000	80
80GDL54-14X10	15	54	140	37	3000	80
80GDL54-14X11	15	54	154	37	3000	80
80GDLS4-14X12	15	54	168	45	3000	80
100GDL72-14X2	20	72	28	11	3000	100
100GDL72-14X3	20	72	42	15	3000	100
100GDL72-14X4	20	72	56	18.5	3000	100
100GDL72-14X5	20	72	70	22	3000	100
100GDL72-14X6	20	72	84	30	3000	100
100GDL72-14X7	20	72	98	30	3000	100
100GDL72-14X8	20	72	112	37	3000	100
100GDL72-14X9	20	72	126	37	3000	100
100GDL72-14X10	20	72	140	45	3000	100
100GDL72-14X11	20	72	154	45	3000	100
100GDL72-14X12	20	72	168	55	3000	100
100GDL100-20X2	27.7	100	40	18.5	3000	100
100GDL100-20X3	27.7	100	60	30	3000	100
100GDL100-20X4	27.7	100	80	37	3000	100
100GDL100-20X5	27.7	100	100	45	3000	100
100GDL100-20X6	27.7	100	120	55	3000	100
100GDL100-20X7	27.7	100	140	75	3000	100
100GDL100-20X8	27.7	100	160	75	3000	100
100GDL100-20X9	27.7	100	180	75	3000	100
100GDL100-20X10	27.7	100	200	60	3000	100
125GDL100-20X2	27.7	100	40	18.5	3000	125
125GDL100-20X3	27.7	100	60	30	3000	125
125GDL100-20X4	27.7	100	80	37	3000	125
125GDL100-20X5	27.7	100	100	45	3000	125
125GDL100-20X6	27.7	100	120	55	3000	125
125GDL100-20X7	27.7	100	140	75	3000	125
125GDL-100-20X8	27.7	100	160	75	3000	125
125GDL100-20X9	27.7	100	180	75	3000	125
125GDL100-20X10	27.7	100	200	90	3000	125
150GDL160-20X2	45	160	40	30	3000	150
150GDL160-20X3	45	160	60	37	3000	150
150GDL160-20X4	45	160	80	55	3000	150
150GDL160-20X5	45	160	100	75	3000	150
150GDL160-20X6	45	160	120	75	3000	150
150GDL160-20X7	45	160	140	90	3000	150
150GDL160-20X8	45	160	160	110	3000	150
150GDL180-25X2	50	180	50	37	3000	150
150GDL180-25X3	50	180	75	55	3000	150
150GDL180-25X4	50	180	100	75	3000	150
150GDL180-25X5	50	180	125	90	3000	150
150GDL180-25X6	50	180	150	110	3000	150
150GDL180-25X7	50	180	175	132	3000	150

Other Sizes Can Provide On Request.

Product Description

TECHNICAL DESCRIPTION

New vertical multistage centrifugal pump
Original design by PURITY
Both square motor & round motor available
YE3 high efficient motor, with protection IP55 class F
Pump case with anti-corrosive coating
Shaft in stainless steel AISI 304 or galvanized iron
Suction and discharge port in cast iron G20 thread
Quality NSK bearing, wear resistance mechanical seal

APPLICATIONS

Suitable for use with clean water and liquids that are not chemically aggressive towards the materials from which the pump is made.
The high efficiency and adaptability of these pumps to even the most unusual of applications, makes them ideal for use in the domestic, civil and industrial sectors; in particular for the distribution of water in combination with pressure sets and for pressure boosting.

USING LIMITS

Medium temperature: -15°C~+120°C
Maximum working pressure: 2.5MPa
Ambient temperature: ≤±40°C

Technical parameters :

Type	Flow		Pressure (Mpa)	Power (kw)	speed (r/min)	Pipe diameter (mm)
	L/S	m³/h				
25GDL2-12X3	0.56	2	36	1.1	3000	25
25GDL2-12X4	0.56	2	48	1.1	3000	25
25GDL2-12X5	0.56	2	60	1.5	3000	25
25GDL2-12X6	0.56	2	72	1.5	3000	25
25GDL2-12X7	0.S6	2	84	2.2	3000	25
25GDL2-12X8	0.56	2	96	2.2	3000	25
25GDL2-12X9	0.&6	2	108	2.2	3000	25
25GDL2-12X10	0.56	2	120	3	3000	25
25GDL2-12X11	0.56	2	132	3	3000	25
25GDL2-12X12	0.56	2	144	3	3000	25
25GDL2-12X13	0.56	2	156	4	3000	25
25GDL2-12X14	0.&6	2	168	4	3000	25
25GDL2-12X15	0.&6	2	180	4	3000	25
25GDL4-11X3	1.11	4	33	1.1	3000	25
25GDL4-11X4	1.11	4	44	1.5	3000	25
25GDL4-11X5	1.11	4	55	2.2	3000	25
25GDL4-11X6	1.11	4	66	2.2	3000	25
25GDL4-11X7	1.11	4	77	3	3000	25
25GDL4-11X8	1.11	4	88	3	3000	25
25GDL4-11X9	1.11	4	99	3	3000	25
25GDL4-11X10	1.11	4	110	4	3000	25
25GDL4-11X11	1.11	4	121	4	3000	25
25GDL4-11X12	1.11	4	132	4	3000	25
25GDL4-11X13	1.11	4	143	4	3000	25
25GDL4-11X14	1.11	4	154	5.5	3000	25
25GDL4-11X15	1.11	4	165	5.5	3000	25
40GDL6-12X2	1.67	6	24	1.5	3000	40
40GDL6-12X3	1.67	6	36	1.5	3000	40

Technical parameters :

Type	Flow		Pressure (Mpa)	Power (kw)	speed (r/min)	Pipe diameter (mm)
	Us	m³/h				
40GDL6-12X4	1.67	6	48	2.2	3000	40
40GDL6-12X5	1.67	6	60	2.2	3000	40
40GDL6-12X6	1.67	6	72	3	3000	40
40GDL6-12X7	1.67	6	84	3	3000	40
40GDL6-12X8	1.67	6	96	4	3000	40
40GDL6-12X9	1.67	6	108	4	3000	40
40GDL6-12X10	1.67	6	120	4	3000	40
40GDL6-12X11	1.67	6	132	5.5	3000	40
40GDL6-12X12	1.67	6	144	5.5	3000	40
40GDL6-12X13	1.67	6	156	7.5	3000	40
40GDL6-12X14	1.67	6	168	7.5	3000	40
40GDL6-12X15	1.67	6	180	7.5	3000	40
50GDL12-15X2	3.33	12	30	2.2	3000	50
50GDL12-15X3	3.33	12	45	3	3000	50
50GDL12-15X4	3.33	12	60	4	3000	50
50GDL12-15X5	3.33	12	75	5.5	3000	50
50GDL12-15X6	3.33	12	90	5.5	3000	50
50GDL12-15X7	3.33	12	105	7.5	3000	50
50GDL12-15X8	3.33	12	120	7.5	3000	50
50GDL12-15X9	3.33	12	135	11	3000	50
50GDL12-15X10	3.33	12	150	11	3000	50
50GDL12-1SX11	3.33	12	165	15	3000	50
50GDL12-15X12	3.33	12	180	15	3000	50
50GDL18-15X2	5	18	30	3	3000	50
50GDL18-15X3	5	18	45	4	3000	50
50GDL18-15X4	5	18	60	5.5	3000	50
50GDL18-15X5	5	18	75	7.5	3000	50
50GDL18-15X6	5	18	90	7.5	3000	50
50GDL18-15X7	5	18	105	11	3000	50
50GDL18-15X8	5	18	120	11	30G0	50
50GDL18-15X9	5	18	135	15	3000	50
50GDL18-15X10	5	18	150	15	3000	50
50GDL18-15X11	5	18	165	18.5	3000	50
50GDL18-15X12	5	18	180	18.5	3000	50
50GDL18-15X13	5	18	195	22	3000	50
65GDL24-12X2	6.67	24	24	3	3000	65
65GDL24-12X3	6.67	24	36	4	3000	65
65GDL24-12X4	6.67	24	48	5.5	3000	65
65GDL24-12X5	6.67	24	60	7.5	3000	65
65GDL24-12X6	6.67	24	72	7.5	3000	65
65GDL24-12X7	6.67	24	84	11	3000	65
65GDL24-12X8	6.67	24	96	11	3000	65
65GDL24-12X9	6.67	24	108	15	3000	65
65GDL24-12X10	6.67	24	120	15	3000	65
65GDL24-12X11	6.67	24	132	18.5	3000	65
65GDL24-12X12	6.67	24	144	18.5	3000	65
80GDL36-12X2	10	36	24	4	3000	80
80GDL36-12X3	10	36	36	5.5	30G0	80
80GDL36-12X4	10	36	48	7.5	3000	80
80GDL36-12X5	10	36	60	11	3000	80
80GDL36-12X6	10	36	72	11	3000	80
80GDL36-12X7	10	36	84	15	3000	80
80GDL36-12X8	10	36	96	15	3000	80
80GDL36-12X9	10	36	108	18.5	3000	80
80GDL36-12X10	10	36	120	18.5	3000	80

Technical parameters :

Type	Flow		Pressure (Mpa)	Power (kw)	speed (r/min)	Pipe diameter (mm)
	L/S	mVh				
80GDL36-12X11	10	36	132	22	3000	80
80GDL36-12X12	10	36	144	22	3000	80
80GDL54-14X2	15	54	28	7.5	3000	80
80GDL54-14X3	15	54	42	11	3000	80
80GDL54-14X4	15	54	56	15	3000	80
80GDL54-14X5	15	54	70	18.5	3000	80
80GDL54-14X6	15	54	84	18.5	3000	80
80GDL54-14X7	15	54	98	22	3000	80
80GDL54-14X8	15	54	112	30	3000	80
80GDL54-14X9	15	54	126	30	3000	80
80GDL54-14X10	15	54	140	37	3000	80
80GDL54-14X11	15	54	154	37	3000	80
80GDLS4-14X12	15	54	168	45	3000	80
100GDL72-14X2	20	72	28	11	3000	100
100GDL72-14X3	20	72	42	15	3000	100
100GDL72-14X4	20	72	56	18.5	3000	100
100GDL72-14X5	20	72	70	22	3000	100
100GDL72-14X6	20	72	84	30	3000	100
100GDL72-14X7	20	72	98	30	3000	100
100GDL72-14X8	20	72	112	37	3000	100
100GDL72-14X9	20	72	126	37	3000	100
100GDL72-14X10	20	72	140	45	3000	100
100GDL72-14X11	20	72	154	45	3000	100
100GDL72-14X12	20	72	168	55	3000	100
100GDL100-20X2	27.7	100	40	18.5	3000	100
100GDL100-20X3	27.7	100	60	30	3000	100
100GDL100-20X4	27.7	100	80	37	3000	100
100GDL100-20X5	27.7	100	100	45	3000	100
100GDL100-20X6	27.7	100	120	55	3000	100
100GDL100-20X7	27.7	100	140	75	3000	100
100GDL100-20X8	27.7	100	160	75	3000	100
100GDL100-20X9	27.7	100	180	75	3000	100
100GDL100-20X10	27.7	100	200	60	3000	100
125GDL100-20X2	27.7	100	40	18.5	3000	125
125GDL100-20X3	27.7	100	60	30	3000	125
125GDL100-20X4	27.7	100	80	37	3000	125
125GDL100-20X5	27.7	100	100	45	3000	125
125GDL100-20X6	27.7	100	120	55	3000	125
125GDL100-20X7	27.7	100	140	75	3000	125
125GDL-100-20X8	27.7	100	160	75	3000	125
125GDL100-20X9	27.7	100	180	75	3000	125
125GDL100-20X10	27.7	100	200	90	3000	125
150GDL160-20X2	45	160	40	30	3000	150
150GDL160-20X3	45	160	60	37	3000	150
150GDL160-20X4	45	160	80	55	3000	150
150GDL160-20X5	45	160	100	75	3000	150
150GDL160-20X6	45	160	120	75	3000	150
150GDL160-20X7	45	160	140	90	3000	150
150GDL160-20X8	45	160	160	110	3000	150
150GDL180-25X2	50	180	50	37	3000	150
150GDL180-25X3	50	180	75	55	3000	150
150GDL180-25X4	50	180	100	75	3000	150
150GDL180-25X5	50	180	125	90	3000	150
150GDL180-25X6	50	180	150	110	3000	150
150GDL180-25X7	50	180	175	132	3000	150

Other Sizes Can Provide On Request.

Multistage Jockey Pumps GDL

[GDL]Pipeline Water Pump Vertical Inline Booster Pump

TECHNICAL DESCRIPTION

- New vertical multistage centrifugal pump
- Original design by PURITY
- Both square motor & round motor available
- YE3 high efficient motor, with protection IP55 class F

-Pump case with anti-corrosive coating

- Shaft in stainless steel AISI 304 or galvanized iron
- Suction and discharge port in cast iron G20 thread
- Quality NSK bearing, wear resistance mechanical seal

Product Description

TECHNICAL DESCRIPTION

New vertical multistage centrifugal pump
Original design by PURITY
Both square motor & round motor available
YE3 high efficient motor, with protection IP55 class F
Pump case with anti-corrosive coating
Shaft in stainless steel AISI 304 or galvanized iron
Suction and discharge port in cast iron G20 thread
Quality NSK bearing, wear resistance mechanical seal

APPLICATIONS

Suitable for use with clean water and liquids that are not chemically aggressive towards the materials from which the pump is made.
The high efficiency and adaptability of these pumps to even the most unusual of applications, makes them ideal for use in the domestic, civil and industrial sectors; in particular for the distribution of water in combination with pressure sets and for pressure boosting.

USING LIMITS

Medium temperature: -15°C~+120°C
Maximum working pressure: 2.5MPa
Ambient temperature: ≤±40°C

Technical parameters :

Type	Flow		Pressure (Mpa)	Power (kw)	speed (r/min)	Pipe diameter (mm)
	L/S	m³/h				
25GDL2-12X3	0.56	2	36	1.1	3000	25
25GDL2-12X4	0.56	2	48	1.1	3000	25
25GDL2-12X5	0.56	2	60	1.5	3000	25
25GDL2-12X6	0.56	2	72	1.5	3000	25
25GDL2-12X7	0.S6	2	84	2.2	3000	25
25GDL2-12X8	0.56	2	96	2.2	3000	25
25GDL2-12X9	0.&6	2	108	2.2	3000	25
25GDL2-12X10	0.56	2	120	3	3000	25
25GDL2-12X11	0.56	2	132	3	3000	25
25GDL2-12X12	0.56	2	144	3	3000	25
25GDL2-12X13	0.56	2	156	4	3000	25
25GDL2-12X14	0.&6	2	168	4	3000	25
25GDL2-12X15	0.&6	2	180	4	3000	25
25GDL4-11X3	1.11	4	33	1.1	3000	25
25GDL4-11X4	1.11	4	44	1.5	3000	25
25GDL4-11X5	1.11	4	55	2.2	3000	25
25GDL4-11X6	1.11	4	66	2.2	3000	25
25GDL4-11X7	1.11	4	77	3	3000	25
25GDL4-11X8	1.11	4	88	3	3000	25
25GDL4-11X9	1.11	4	99	3	3000	25
25GDL4-11X10	1.11	4	110	4	3000	25
25GDL4-11X11	1.11	4	121	4	3000	25
25GDL4-11X12	1.11	4	132	4	3000	25
25GDL4-11X13	1.11	4	143	4	3000	25
25GDL4-11X14	1.11	4	154	5.5	3000	25
25GDL4-11X15	1.11	4	165	5.5	3000	25
40GDL6-12X2	1.67	6	24	1.5	3000	40
40GDL6-12X3	1.67	6	36	1.5	3000	40

Technical parameters :

Type	Flow		Pressure (Mpa)	Power (kw)	speed (r/min)	Pipe diameter (mm)
	Us	m³/h				
40GDL6-12X4	1.67	6	48	2.2	3000	40
40GDL6-12X5	1.67	6	60	2.2	3000	40
40GDL6-12X6	1.67	6	72	3	3000	40
40GDL6-12X7	1.67	6	84	3	3000	40
40GDL6-12X8	1.67	6	96	4	3000	40
40GDL6-12X9	1.67	6	108	4	3000	40
40GDL6-12X10	1.67	6	120	4	3000	40
40GDL6-12X11	1.67	6	132	5.5	3000	40
40GDL6-12X12	1.67	6	144	5.5	3000	40
40GDL6-12X13	1.67	6	156	7.5	3000	40
40GDL6-12X14	1.67	6	168	7.5	3000	40
40GDL6-12X15	1.67	6	180	7.5	3000	40
50GDL12-15X2	3.33	12	30	2.2	3000	50
50GDL12-15X3	3.33	12	45	3	3000	50
50GDL12-15X4	3.33	12	60	4	3000	50
50GDL12-15X5	3.33	12	75	5.5	3000	50
50GDL12-15X6	3.33	12	90	5.5	3000	50
50GDL12-15X7	3.33	12	105	7.5	3000	50
50GDL12-15X8	3.33	12	120	7.5	3000	50
50GDL12-15X9	3.33	12	135	11	3000	50
50GDL12-15X10	3.33	12	150	11	3000	50
50GDL12-1SX11	3.33	12	165	15	3000	50
50GDL12-15X12	3.33	12	180	15	3000	50
50GDL18-15X2	5	18	30	3	3000	50
50GDL18-15X3	5	18	45	4	3000	50
50GDL18-15X4	5	18	60	5.5	3000	50
50GDL18-15X5	5	18	75	7.5	3000	50
50GDL18-15X6	5	18	90	7.5	3000	50
50GDL18-15X7	5	18	105	11	3000	50
50GDL18-15X8	5	18	120	11	30G0	50
50GDL18-15X9	5	18	135	15	3000	50
50GDL18-15X10	5	18	150	15	3000	50
50GDL18-15X11	5	18	165	18.5	3000	50
50GDL18-15X12	5	18	180	18.5	3000	50
50GDL18-15X13	5	18	195	22	3000	50
65GDL24-12X2	6.67	24	24	3	3000	65
65GDL24-12X3	6.67	24	36	4	3000	65
65GDL24-12X4	6.67	24	48	5.5	3000	65
65GDL24-12X5	6.67	24	60	7.5	3000	65
65GDL24-12X6	6.67	24	72	7.5	3000	65
65GDL24-12X7	6.67	24	84	11	3000	65
65GDL24-12X8	6.67	24	96	11	3000	65
65GDL24-12X9	6.67	24	108	15	3000	65
65GDL24-12X10	6.67	24	120	15	3000	65
65GDL24-12X11	6.67	24	132	18.5	3000	65
65GDL24-12X12	6.67	24	144	18.5	3000	65
80GDL36-12X2	10	36	24	4	3000	80
80GDL36-12X3	10	36	36	5.5	30G0	80
80GDL36-12X4	10	36	48	7.5	3000	80
80GDL36-12X5	10	36	60	11	3000	80
80GDL36-12X6	10	36	72	11	3000	80
80GDL36-12X7	10	36	84	15	3000	80
80GDL36-12X8	10	36	96	15	3000	80
80GDL36-12X9	10	36	108	18.5	3000	80
80GDL36-12X10	10	36	120	18.5	3000	80

Technical parameters :

Type	Flow		Pressure (Mpa)	Power (kw)	speed (r/min)	Pipe diameter (mm)
	L/S	mVh				
80GDL36-12X11	10	36	132	22	3000	80
80GDL36-12X12	10	36	144	22	3000	80
80GDL54-14X2	15	54	28	7.5	3000	80
80GDL54-14X3	15	54	42	11	3000	80
80GDL54-14X4	15	54	56	15	3000	80
80GDL54-14X5	15	54	70	18.5	3000	80
80GDL54-14X6	15	54	84	18.5	3000	80
80GDL54-14X7	15	54	98	22	3000	80
80GDL54-14X8	15	54	112	30	3000	80
80GDL54-14X9	15	54	126	30	3000	80
80GDL54-14X10	15	54	140	37	3000	80
80GDL54-14X11	15	54	154	37	3000	80
80GDLS4-14X12	15	54	168	45	3000	80
100GDL72-14X2	20	72	28	11	3000	100
100GDL72-14X3	20	72	42	15	3000	100
100GDL72-14X4	20	72	56	18.5	3000	100
100GDL72-14X5	20	72	70	22	3000	100
100GDL72-14X6	20	72	84	30	3000	100
100GDL72-14X7	20	72	98	30	3000	100
100GDL72-14X8	20	72	112	37	3000	100
100GDL72-14X9	20	72	126	37	3000	100
100GDL72-14X10	20	72	140	45	3000	100
100GDL72-14X11	20	72	154	45	3000	100
100GDL72-14X12	20	72	168	55	3000	100
100GDL100-20X2	27.7	100	40	18.5	3000	100
100GDL100-20X3	27.7	100	60	30	3000	100
100GDL100-20X4	27.7	100	80	37	3000	100
100GDL100-20X5	27.7	100	100	45	3000	100
100GDL100-20X6	27.7	100	120	55	3000	100
100GDL100-20X7	27.7	100	140	75	3000	100
100GDL100-20X8	27.7	100	160	75	3000	100
100GDL100-20X9	27.7	100	180	75	3000	100
100GDL100-20X10	27.7	100	200	60	3000	100
125GDL100-20X2	27.7	100	40	18.5	3000	125
125GDL100-20X3	27.7	100	60	30	3000	125
125GDL100-20X4	27.7	100	80	37	3000	125
125GDL100-20X5	27.7	100	100	45	3000	125
125GDL100-20X6	27.7	100	120	55	3000	125
125GDL100-20X7	27.7	100	140	75	3000	125
125GDL-100-20X8	27.7	100	160	75	3000	125
125GDL100-20X9	27.7	100	180	75	3000	125
125GDL100-20X10	27.7	100	200	90	3000	125
150GDL160-20X2	45	160	40	30	3000	150
150GDL160-20X3	45	160	60	37	3000	150
150GDL160-20X4	45	160	80	55	3000	150
150GDL160-20X5	45	160	100	75	3000	150
150GDL160-20X6	45	160	120	75	3000	150
150GDL160-20X7	45	160	140	90	3000	150
150GDL160-20X8	45	160	160	110	3000	150
150GDL180-25X2	50	180	50	37	3000	150
150GDL180-25X3	50	180	75	55	3000	150
150GDL180-25X4	50	180	100	75	3000	150
150GDL180-25X5	50	180	125	90	3000	150
150GDL180-25X6	50	180	150	110	3000	150
150GDL180-25X7	50	180	175	132	3000	150

Other Sizes Can Provide On Request.

Product Description

TECHNICAL DESCRIPTION

New vertical multistage centrifugal pump
Original design by PURITY
Both square motor & round motor available
YE3 high efficient motor, with protection IP55 class F
Pump case with anti-corrosive coating
Shaft in stainless steel AISI 304 or galvanized iron
Suction and discharge port in cast iron G20 thread
Quality NSK bearing, wear resistance mechanical seal

APPLICATIONS

Suitable for use with clean water and liquids that are not chemically aggressive towards the materials from which the pump is made.
The high efficiency and adaptability of these pumps to even the most unusual of applications, makes them ideal for use in the domestic, civil and industrial sectors; in particular for the distribution of water in combination with pressure sets and for pressure boosting.

USING LIMITS

Medium temperature: -15°C~+120°C
Maximum working pressure: 2.5MPa
Ambient temperature: ≤±40°C

Technical parameters :

Type	Flow		Pressure (Mpa)	Power (kw)	speed (r/min)	Pipe diameter (mm)
	L/S	m³/h				
25GDL2-12X3	0.56	2	36	1.1	3000	25
25GDL2-12X4	0.56	2	48	1.1	3000	25
25GDL2-12X5	0.56	2	60	1.5	3000	25
25GDL2-12X6	0.56	2	72	1.5	3000	25
25GDL2-12X7	0.S6	2	84	2.2	3000	25
25GDL2-12X8	0.56	2	96	2.2	3000	25
25GDL2-12X9	0.&6	2	108	2.2	3000	25
25GDL2-12X10	0.56	2	120	3	3000	25
25GDL2-12X11	0.56	2	132	3	3000	25
25GDL2-12X12	0.56	2	144	3	3000	25
25GDL2-12X13	0.56	2	156	4	3000	25
25GDL2-12X14	0.&6	2	168	4	3000	25
25GDL2-12X15	0.&6	2	180	4	3000	25
25GDL4-11X3	1.11	4	33	1.1	3000	25
25GDL4-11X4	1.11	4	44	1.5	3000	25
25GDL4-11X5	1.11	4	55	2.2	3000	25
25GDL4-11X6	1.11	4	66	2.2	3000	25
25GDL4-11X7	1.11	4	77	3	3000	25
25GDL4-11X8	1.11	4	88	3	3000	25
25GDL4-11X9	1.11	4	99	3	3000	25
25GDL4-11X10	1.11	4	110	4	3000	25
25GDL4-11X11	1.11	4	121	4	3000	25
25GDL4-11X12	1.11	4	132	4	3000	25
25GDL4-11X13	1.11	4	143	4	3000	25
25GDL4-11X14	1.11	4	154	5.5	3000	25
25GDL4-11X15	1.11	4	165	5.5	3000	25
40GDL6-12X2	1.67	6	24	1.5	3000	40
40GDL6-12X3	1.67	6	36	1.5	3000	40

Technical parameters :

Type	Flow		Pressure (Mpa)	Power (kw)	speed (r/min)	Pipe diameter (mm)
	Us	m³/h				
40GDL6-12X4	1.67	6	48	2.2	3000	40
40GDL6-12X5	1.67	6	60	2.2	3000	40
40GDL6-12X6	1.67	6	72	3	3000	40
40GDL6-12X7	1.67	6	84	3	3000	40
40GDL6-12X8	1.67	6	96	4	3000	40
40GDL6-12X9	1.67	6	108	4	3000	40
40GDL6-12X10	1.67	6	120	4	3000	40
40GDL6-12X11	1.67	6	132	5.5	3000	40
40GDL6-12X12	1.67	6	144	5.5	3000	40
40GDL6-12X13	1.67	6	156	7.5	3000	40
40GDL6-12X14	1.67	6	168	7.5	3000	40
40GDL6-12X15	1.67	6	180	7.5	3000	40
50GDL12-15X2	3.33	12	30	2.2	3000	50
50GDL12-15X3	3.33	12	45	3	3000	50
50GDL12-15X4	3.33	12	60	4	3000	50
50GDL12-15X5	3.33	12	75	5.5	3000	50
50GDL12-15X6	3.33	12	90	5.5	3000	50
50GDL12-15X7	3.33	12	105	7.5	3000	50
50GDL12-15X8	3.33	12	120	7.5	3000	50
50GDL12-15X9	3.33	12	135	11	3000	50
50GDL12-15X10	3.33	12	150	11	3000	50
50GDL12-1SX11	3.33	12	165	15	3000	50
50GDL12-15X12	3.33	12	180	15	3000	50
50GDL18-15X2	5	18	30	3	3000	50
50GDL18-15X3	5	18	45	4	3000	50
50GDL18-15X4	5	18	60	5.5	3000	50
50GDL18-15X5	5	18	75	7.5	3000	50
50GDL18-15X6	5	18	90	7.5	3000	50
50GDL18-15X7	5	18	105	11	3000	50
50GDL18-15X8	5	18	120	11	30G0	50
50GDL18-15X9	5	18	135	15	3000	50
50GDL18-15X10	5	18	150	15	3000	50
50GDL18-15X11	5	18	165	18.5	3000	50
50GDL18-15X12	5	18	180	18.5	3000	50
50GDL18-15X13	5	18	195	22	3000	50
65GDL24-12X2	6.67	24	24	3	3000	65
65GDL24-12X3	6.67	24	36	4	3000	65
65GDL24-12X4	6.67	24	48	5.5	3000	65
65GDL24-12X5	6.67	24	60	7.5	3000	65
65GDL24-12X6	6.67	24	72	7.5	3000	65
65GDL24-12X7	6.67	24	84	11	3000	65
65GDL24-12X8	6.67	24	96	11	3000	65
65GDL24-12X9	6.67	24	108	15	3000	65
65GDL24-12X10	6.67	24	120	15	3000	65
65GDL24-12X11	6.67	24	132	18.5	3000	65
65GDL24-12X12	6.67	24	144	18.5	3000	65
80GDL36-12X2	10	36	24	4	3000	80
80GDL36-12X3	10	36	36	5.5	30G0	80
80GDL36-12X4	10	36	48	7.5	3000	80
80GDL36-12X5	10	36	60	11	3000	80
80GDL36-12X6	10	36	72	11	3000	80
80GDL36-12X7	10	36	84	15	3000	80
80GDL36-12X8	10	36	96	15	3000	80
80GDL36-12X9	10	36	108	18.5	3000	80
80GDL36-12X10	10	36	120	18.5	3000	80

Technical parameters :

Type	Flow		Pressure (Mpa)	Power (kw)	speed (r/min)	Pipe diameter (mm)
	L/S	mVh				
80GDL36-12X11	10	36	132	22	3000	80
80GDL36-12X12	10	36	144	22	3000	80
80GDL54-14X2	15	54	28	7.5	3000	80
80GDL54-14X3	15	54	42	11	3000	80
80GDL54-14X4	15	54	56	15	3000	80
80GDL54-14X5	15	54	70	18.5	3000	80
80GDL54-14X6	15	54	84	18.5	3000	80
80GDL54-14X7	15	54	98	22	3000	80
80GDL54-14X8	15	54	112	30	3000	80
80GDL54-14X9	15	54	126	30	3000	80
80GDL54-14X10	15	54	140	37	3000	80
80GDL54-14X11	15	54	154	37	3000	80
80GDLS4-14X12	15	54	168	45	3000	80
100GDL72-14X2	20	72	28	11	3000	100
100GDL72-14X3	20	72	42	15	3000	100
100GDL72-14X4	20	72	56	18.5	3000	100
100GDL72-14X5	20	72	70	22	3000	100
100GDL72-14X6	20	72	84	30	3000	100
100GDL72-14X7	20	72	98	30	3000	100
100GDL72-14X8	20	72	112	37	3000	100
100GDL72-14X9	20	72	126	37	3000	100
100GDL72-14X10	20	72	140	45	3000	100
100GDL72-14X11	20	72	154	45	3000	100
100GDL72-14X12	20	72	168	55	3000	100
100GDL100-20X2	27.7	100	40	18.5	3000	100
100GDL100-20X3	27.7	100	60	30	3000	100
100GDL100-20X4	27.7	100	80	37	3000	100
100GDL100-20X5	27.7	100	100	45	3000	100
100GDL100-20X6	27.7	100	120	55	3000	100
100GDL100-20X7	27.7	100	140	75	3000	100
100GDL100-20X8	27.7	100	160	75	3000	100
100GDL100-20X9	27.7	100	180	75	3000	100
100GDL100-20X10	27.7	100	200	60	3000	100
125GDL100-20X2	27.7	100	40	18.5	3000	125
125GDL100-20X3	27.7	100	60	30	3000	125
125GDL100-20X4	27.7	100	80	37	3000	125
125GDL100-20X5	27.7	100	100	45	3000	125
125GDL100-20X6	27.7	100	120	55	3000	125
125GDL100-20X7	27.7	100	140	75	3000	125
125GDL-100-20X8	27.7	100	160	75	3000	125
125GDL100-20X9	27.7	100	180	75	3000	125
125GDL100-20X10	27.7	100	200	90	3000	125
150GDL160-20X2	45	160	40	30	3000	150
150GDL160-20X3	45	160	60	37	3000	150
150GDL160-20X4	45	160	80	55	3000	150
150GDL160-20X5	45	160	100	75	3000	150
150GDL160-20X6	45	160	120	75	3000	150
150GDL160-20X7	45	160	140	90	3000	150
150GDL160-20X8	45	160	160	110	3000	150
150GDL180-25X2	50	180	50	37	3000	150
150GDL180-25X3	50	180	75	55	3000	150
150GDL180-25X4	50	180	100	75	3000	150
150GDL180-25X5	50	180	125	90	3000	150
150GDL180-25X6	50	180	150	110	3000	150
150GDL180-25X7	50	180	175	132	3000	150

Other Sizes Can Provide On Request.

Multistage Jockey Pumps CDL1

[CDL]Vertical Multistage Jockey Pump High Pressure Pump from PURITY

CDL/ CDLF is a kind of multifunctional products.lt can be used to convey various medium from tap waterto industrial liquid

at different temperature and with di-fferent flow rate and pressure. CDL type is applicable toconveying non-corrosive liquid,

while CDLF is suitablefor slightly corrosive liquid.

Thin, clean, non-flammable and non-explosive liquidcontaining no solid granules and fibers.

• Liquid temperature:

Normal temperature type: -I5C ～+70'C,

Hot water type:-15C~+120C

•Ambient temperature: up to +40C.

•Altitude:up to 1000m

Product Specification (50HZ)

vertical Multistage Pump

Technical Data
Lift ranged-21 BAR
Flow range:2m^3/h

ADVANTAGES

Eight Characteristics

Energy-saving Certificate

Large Flow Capacity

YE3 Motor IP55 ClassF All Copper Wire

Stainless Steel 304 Impeller & Shaft

Anti-corrosive Coating

NSK Bearing

Costormized Sizes & Pumps

Good Quality & Service 2-Years Guarantee

PRODUCT INFORMATION

CDL/ CDLF is a kind of multifunctional products.lt can be used to convey various medium from tap waterto
industrial liquid at different temperature and with di-fferent flow rate and pressure. CDL type is applicable

toconveying non-corrosive liquid, while CDLF is suitablefor slightly corrosive liquid.
•Water supply: Water filter and transport in Waterworks, boosting of main pipeline, boosting in high-rise
buildings.
•Industrial boosting: Process flow water system, cleaning system, high-pressure washing system, fire
fightingsystem.
•Industrial liquid conveying: Cooling and air-conditioning system, boiler water supply and condensing
system,.machine-associated purpose, acids and alkali.
•Water treatment: Ultrafiltration system, reverse osmosis system, istillation system, separator, swimming pool.
•Irrigation: Farmland irgation, spray irrigation, dripping irrigation.

Thin, clean, non-flammable and non-explosive liquidcontaining no solid granules and fibers.
•Liquid temperature:
Normal temperature type: -I5C ～+70· C ,
Hot water type:-15C*+120C
•Ambient temperature: up to +40C.
•Altitude:up to 1000m

•Full-enclosed air -blast two-pole standard motor
•Protection class: 1P55
•Insulation class: F
•Standard voltage:50Hz: 1 x 220-230/ 240V
3 x 200-220/ 346-380V
3 x 220-240/ 380-415V
3 x 380-415V

參 Definition of Model

CDL/CDLH，2,3,4,5,8，10，12，15,16 and 20

CDL F 8 — 2/1

T T T T T—

- Number of impeller
- Stage
- Rated flow(m\'h)
- (Common type omitted) Flow passage components are of stainless steel 304 or 3161.
- Light vertical multistage centrifugal pump

CDL/CDLF32,42,65,85,120 and 150

CDL F 32 — 30 — 2

- Number of small impeller
- Stage X10
- Rated flow(m^5yh)
- (Common type omitted) Flow passage components arc of stainless steel 304 or316L
- Light vertical multistage centrifugal pump

CDL/CDLF200

CDL F 200 — 30 — 2A — B

- One small impeller B
- Two small impellers A
- Stagex10
- Rated flow (m^3/h)
- (Common type omitted) Flow passage components are of stainless steel 304 or 3161.
- Light vertical multistage centrifugal pump

• Max working pressure

Model	Max. pt^ssurdbar)
CT>l.1,2»3· 4,5Flangc	25
CDL(F) 1,23.4,5 Over Flange	16
CDLFI ,23.4.5 Flangc^cutting ferrule joim,pipc thread	25
CDL8J 0,1245.1620 Flange	25
CDL(F)8 Over Flaiige	16
CDLF«J0,12J5,16J0 Flange.cutting fcmile joint.pipc thread	25
CDL32	
32-IO-I-32-80 32-90-2*32-160	16(30) 30
CDLF32	30
CDL42	
42-10.1 ～42.60-2 42-60-42-90 42-IOO-2-42-I3O-2	16(30) 25(30) 30
CDLF42	
42-10-1-42-90 42-100-2^42-130-2	25(30) 30
CDL65	
65-10-1-65-50-2 65-50-1-65-80-1	16(25) 25
CDL«5	
85-10-1-85-40-2 85-40-H5-60	16(25) 25
CDLF65,H5	25
CDUCDLFI 20,150,200	20

Pumps with pressure inside brackets need to specify especially.

• Max. Ambient temperature

When the pump operates under ambient temperature higher than 40*0 or under altitude higher than 1000m, because of low air density and poor cooling effects, the motor output power P2 will be decreased to certain extent. If the pump is operated under the above-said conditions, i(should be equipped with motor of higher power.

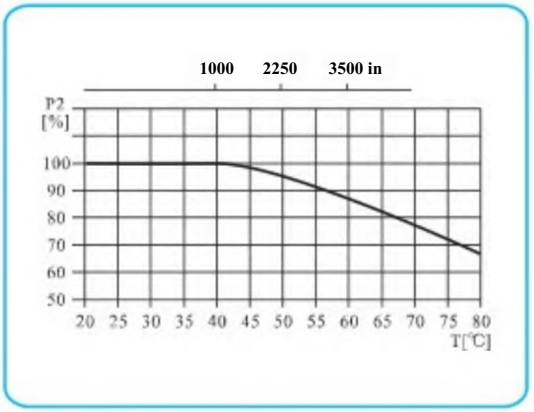

• Performance scope

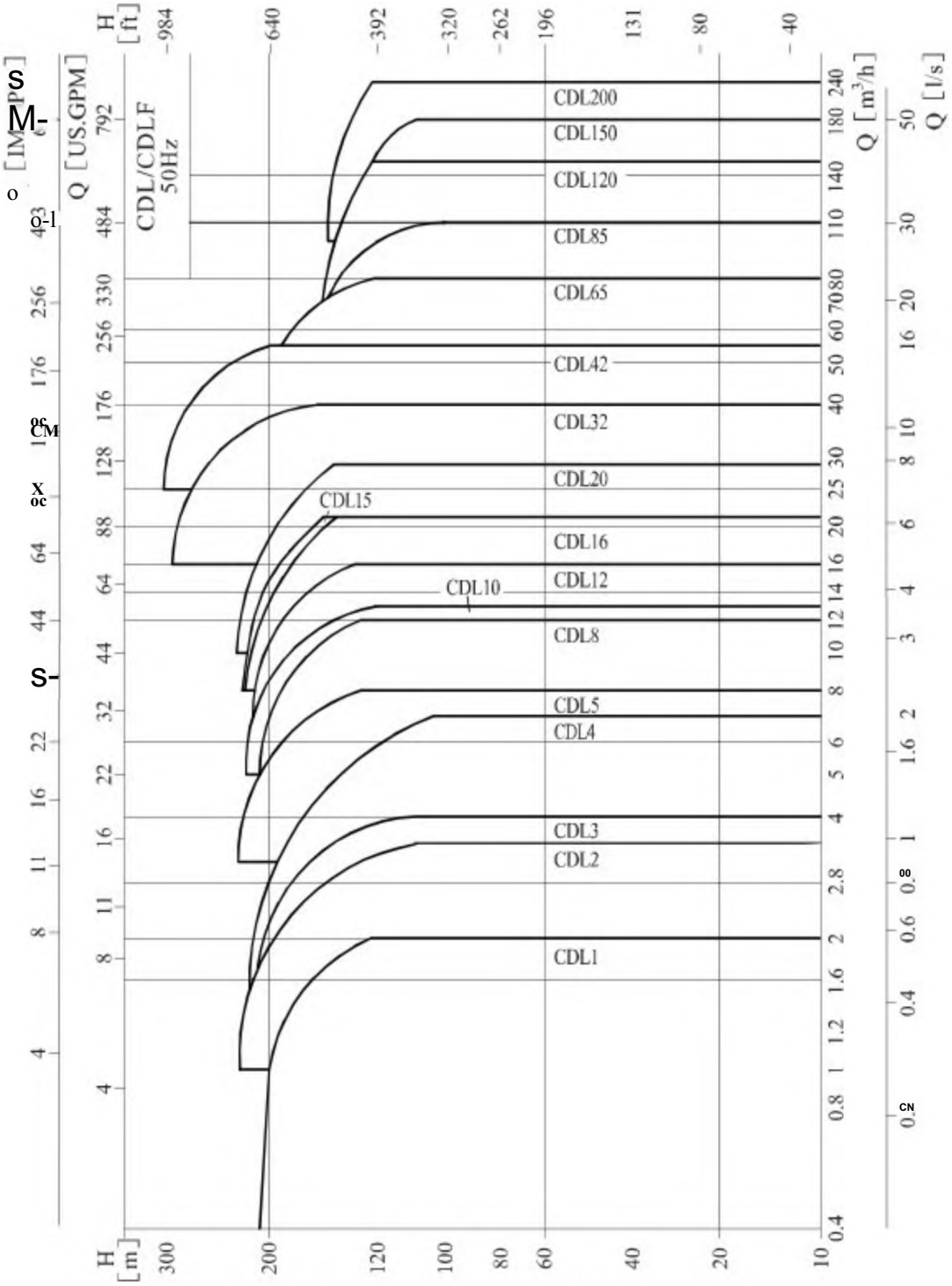

• Product range

Dctcnpooa	CDLl	?DU	CDU	CDL4	CDLS	ČDL«	CUUO	(DU2	CDL1S	CDL16	ČIX.20	CDO2	ČDL42	CULM	CDLM5	CDLI20	"MJ 50	IDU00
IU(c Ikrnfott'M	1	2	$	4	S	s	10	12	IS	16	20	)2	42	65	85	120	ISO	200
Rjtc flow[U/s]	0.2H	036	(KM	l.l	1)9	2J	2.7»	33	417	44	5.6	8.9	117	誦R	W	33	41.6	55.6
How raatefni'lhj	0L4-2	MS	I.2-4	13.?	3-8	542	$•13	7.|6	M-22	*•22	10*2*	16-40	XS.M	UJ.10	5O-IID	MMSU	80-180	IOIK24O
Flow range[l/s]	• II4M6	o^wi<r	O.M 1.1	04 : 1 9	Ohl.? ?2	1.4-3.5	1.4 161	1 9-44	2.2 A. 1	22 *1	2.«7.«	4.4 11 1	69 1? 1	M222	I5€-5O5	1'74事 :	mo	27.8-66.7
MAX prv*«iN|bM|	21	2J	22	21	2J	31	22	22	22	22	21	2V	30	22	□	16	16	16
Motor powctfkW]	0J , .:2	03 , .J	0.37.3	0J7-4	OJ--55	W5	O.?M 5	1.5*11	1.1.15	2J-IS	1 l.l"	I.5-3U	?V-45	4G-I5	5M5	II.7S	11.75	I*MI ●
lawful	•I5-+I2O																	
MAX.efficiency[%]	44	46	M	57	64	62	M	63	70	«6	69	T3	75	76	77	74	73	T9
Type																		
COL	●	●	●	●	●	●	●	●	●	●	●	●	●	●	●	●	●	●
CDU	●	●	●	●	●	●	●	●	●	●	●	●	●	●	●	●	●	●
CDL Pipelines																		
DfNFbn«e	DN25	0N2S	DW5	DN52	DNJ2	I>S4rt	1>N*>	DN5O	DM5O	DN5O	DN5O	OK*$	DXHO	DKI«»	D . im	DNI25	DNI25	1>KISO
Oval fian| : e	G1	G1	Gl	Gl%	Gl%	GIM	OIV :											
CDU Pipchacs																		
DINFlaocc	DN25	DN25	DN25	DN32	DM32	DM0	DN40	DN5O	DX50	DN50	DN50	DN65	DNHO	DNIOO	DNIOO	DNI25	DNI25	DM54
C«VlM< fcvmk jiMWI	DNJ2	IW32	DN32	DN32	DMJ2	1)X50	DN50	DN50	DV50	DN50	DNW							
Pipe thread	ZUI%	ZGI<.	ZGI%	zum	ZGIH	ZG2	ZG2	ZG2	ZG2	ZG2	ZG2							
Ovainaftge	Gl	Gl	Gl	GIH	cm	Gl^	Gl%											

參 Performance table

Model	Driving motor (kW)	Driving motor |hp»	Q (m³/h)	0.4	0.6	0.8	1.0	1.2	1.4	1.6	1^	2.0
CI)Li-2	0.37	0.5		B	12.5	12	11.5	11	10.5	10	9.5	9
CDLI-3	0.37	0.5		19	18	17^	17	16.5	16	15	14	12
CDl.l-4	0.37	0.5		24	23.5	23	22.5	21,5	21	19	18	16
CDLI-5	0.37	0.5		30	29.6	29	28	27	26	24	22	20
CDLI-6	037	0.5		36	35.5	35	33.5	33	31	2X	26	23
CDL1-7	0.37	0.5		42	41	40.5	39	38	36	33	30	27
CDL1-8	0.55	0.75		48	47	46	45	43	41	38	34	30
OL1-9	0.55	0.75		54	53	52	51	40	46	43	39	33
CDL1-10	0.55	0.75		60	59	5H	57	54	51	4X	43	36
CDI.I-II	0.55	0.75		66	65	63	61	59	56	52	47	40
CDLI-12	0.75	1	H	72	71	69	67	64	61	57	51	44
CDLI-13	0.75	1	(m)	78	77	75	73	69	66	62	55	47
CDL1-15	0.75	1		R9	XK	86	M	79	76	71	63	55
CDL1-17	i.l	1.5		101	99	97	95	89	86	80	71	62
CDIJ-W	1.1	1.5		IB	110	108	106	99	96	8Q	79	69
CDL1-21	14	1.5		124	122	120	117	110	106	98	87	75
CDI.I-23	I.l	1.5		137	133	131	128	121	116	107	96	82
CDLI-25	1.5	2		149	U5	143	139	131	126	116	104	89
CDLI-27	1.5	2		161	157	155	150	MI	136	125	112	95
CDLI-30	1.5	2		178	175	171	166	157	150	139	124	106
CDL1-33	2.2	3		196	192	1X8	U3	173	165	154	137	118
CDLI-36	2.2	3		214	210	205	200	190	(8)	169	151	130

• Installation sketch

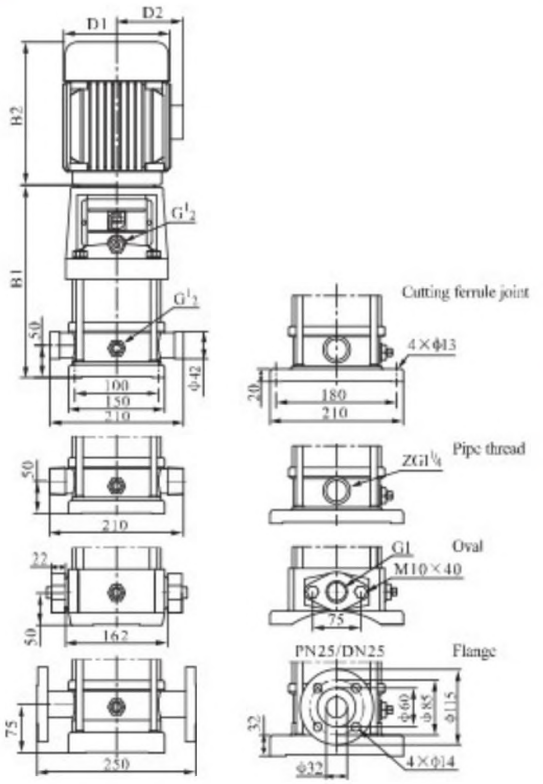

• Size and weight

Model	Size (mm) B1	B2	B1+B2	D1	D2	Weight (kg)
CDLI-2	258	225	483	I4K	117	20
CDLI-3	276	225	501	I4H	117	20
OLI -4	294	225	519	148	H7	21
CDLI-5	312	225	537	148	TIT	21
CDLI-6	330	225	555	I4K	117	22
CDLI-7	348	225	573	148	117	23
CDLI-8	366	225	591	14R	Ti7	24
CDLI-9	384	225	609	148	117	25
CDLI-10	402	225	627	148	117	26
CDLI-11	420	225	64?	MK	117	26
CDLI-12	44S	245	693	170	142	29
CDLI-B	466	245	711	no	142	Jo
CDLI-T7	502	245	747	no	142	5T
<DI1-17	538	245	783	no	142	33
CDLI-19	574	245	819	J70	142	34
CDLI-21	610	245	855	170	142	35
CDLI-23	646	245	891	170	142	36
CDLI-25	692	290	982	190	155	42
CDLI-27	728	290	1018	190	155	43
CDLI-30	7X2	290	1072	190	155	45
CDLI-33	836	290	1126	190	155	49
CDLI-36	890	290	1180	190	155	7T

CDLI-25 - 1-36 Mib-ciHinrclivn of pipeline has no oval flange conneclion.
Ihc overall dimensions of the smglc-pliasc motor and explosion-proof motor arc a littk different. Pls contact us for details.

Product Specification (60HZ)

vertical Multistage Pump

Technical Data
Lift ranged-21 BAR
Flow range:2m^3/h

ADVANTAGES

Eight Characteristics

Energy-saving Certificate

Large Flow Capacity

YE3 Motor IP55 ClassF All Copper Wire

Stainless Steel 304 Impeller & Shaft

Anti-corrosive Coating

NSK Bearing

Costormized Sizes & Pumps

Good Quality & Service 2-Years Guarantee

PRODUCT INFORMATION

CDL/ CDLF is a kind of multifunctional products.lt can be used to convey various medium from tap waterto
industrial liquid at different temperature and with di-fferent flow rate and pressure. CDL type is applicable

toconveying non-corrosive liquid, while CDLF is suitablefor slightly corrosive liquid.
•Water supply: Water filter and transport in Waterworks, boosting of main pipeline, boosting in high-rise
buildings.
•Industrial boosting: Process flow water system, cleaning system, high-pressure washing system, fire
fightingsystem.
•Industrial liquid conveying: Cooling and air-conditioning system, boiler water supply and condensing
system,.machine-associated purpose, acids and alkali.
•Water treatment: Ultrafiltration system, reverse osmosis system, istillation system, separator, swimming pool.
•Irrigation: Farmland irgation, spray irrigation, dripping irrigation.

Thin, clean, non-flammable and non-explosive liquidcontaining no solid granules and fibers.
•Liquid temperature:
Normal temperature type: -I5C ～+70· C ,
Hot water type:-15C*+120C
•Ambient temperature: up to +40C.
•Altitude:up to 1000m

•Full-enclosed air -blast two-pole standard motor
•Protection class: 1P55
•Insulation class: F
•Standard voltage:50Hz: 1 x 220-230/ 240V
3 x 200-220/ 346-380V
3 x 220-240/ 380-415V
3 x 380-415V

參 Definition of Model

CDL/CDLH，2,3,4,5,8，10，12，15,16 and 20

CDL F 8 — 2/1

T T T T T—

- Number of impeller
- Stage
- Rated flow(m\'h)
- (Common type omitted) Flow passage components are of stainless steel 304 or 3161.
- Light vertical multistage centrifugal pump

CDL/CDLF32,42,65,85,120 and 150

CDL F 32 — 30 — 2

- Number of small impeller
- Stage X10
- Rated flow(m^5yh)
- (Common type omitted) Flow passage components arc of stainless steel 304 or316L
- Light vertical multistage centrifugal pump

CDL/CDLF200

CDL F 200 — 30 — 2A — B

- One small impeller B
- Two small impellers A
- Stagex10
- Rated flow (m^3/h)
- (Common type omitted) Flow passage components are of stainless steel 304 or 3161.
- Light vertical multistage centrifugal pump

• Max working pressure

Model	Max. pt^ssurdbar)
CT>l.1,2»3· 4,5Flangc	25
CDL(F) 1,23.4,5 Over Flange	16
CDLFI ,23.4.5 Flangc^cutting ferrule joim,pipc thread	25
CDL8J 0,1245.1620 Flange	25
CDL(F)8 Over Flaiige	16
CDLF«J0,12J5,16J0 Flange.cutting fcmile joint.pipc thread	25
CDL32	
32-IO-I-32-80 32-90-2*32-160	16(30) 30
CDLF32	30
CDL42	
42-10.1 ～42.60-2 42-60-42-90 42-IOO-2-42-I3O-2	16(30) 25(30) 30
CDLF42	
42-10-1-42-90 42-100-2^42-130-2	25(30) 30
CDL65	
65-10-1-65-50-2 65-50-1-65-80-1	16(25) 25
CDL«5	
85-10-1-85-40-2 85-40-H5-60	16(25) 25
CDLF65,H5	25
CDUCDLFI 20,150,200	20

Pumps with pressure inside brackets need to specify especially.

• Max. Ambient temperature

When the pump operates under ambient temperature higher than 40*0 or under altitude higher than 1000m, because of low air density and poor cooling effects, the motor output power P2 will be decreased to certain extent. If the pump is operated under the above-said conditions, i(should be equipped with motor of higher power.

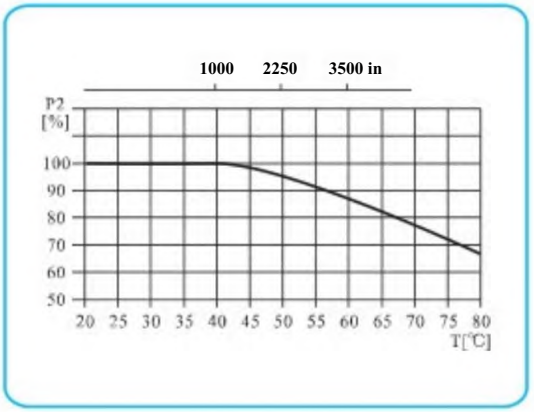

• Performance scope

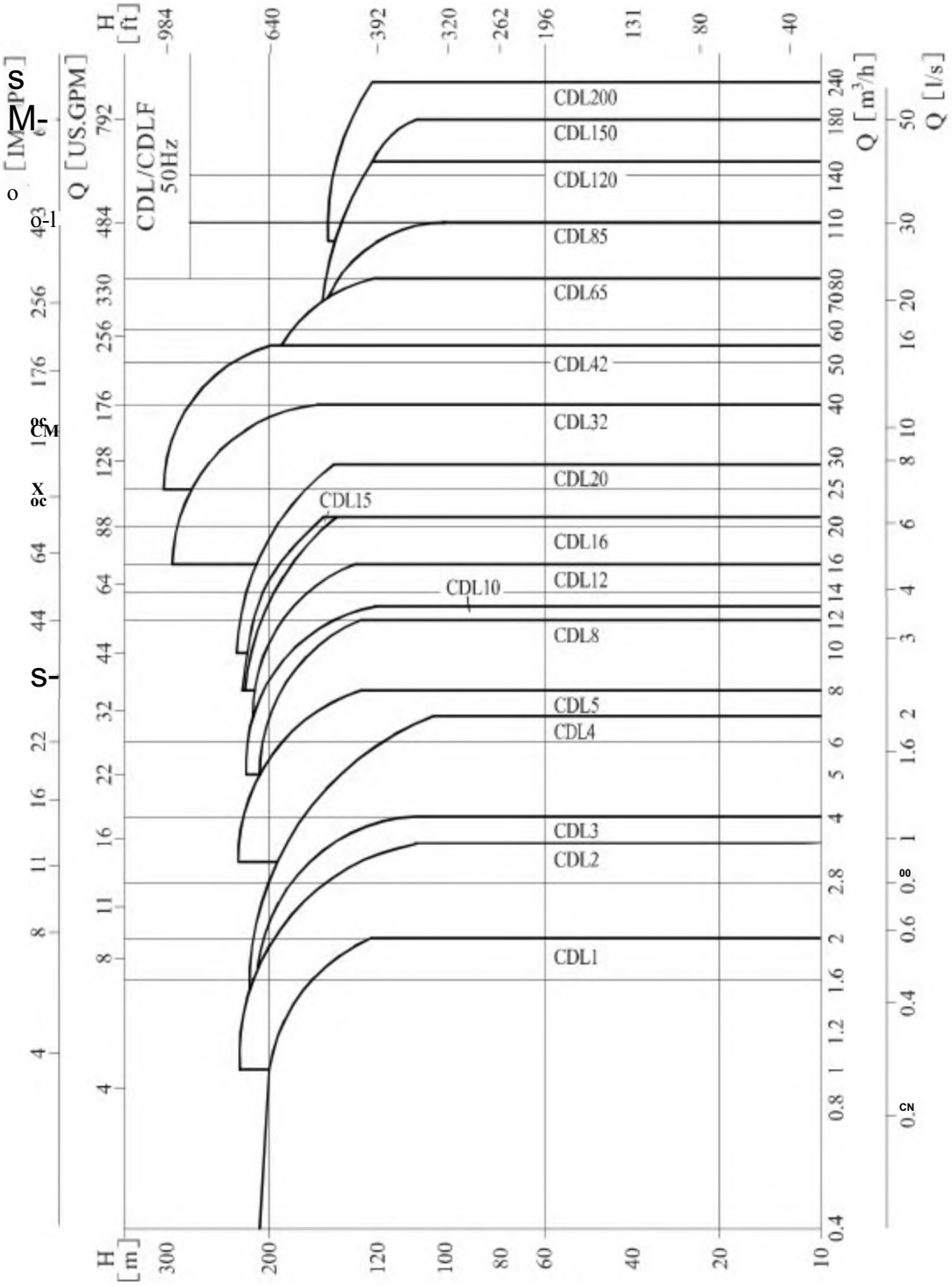

• Product range

Dctcnpooa	CDLl	?DU	CDU	CDL4	CDLS	ČDL«	CUUO	(DU2	CDL1S	CDL16	ČIX.20	CDO2	ČDL42	CULM	CDLM5	CDLI20	"MJ 50	IDU00
IU(c Ikrnfott'M	1	2	$	4	S	s	10	12	IS	16	20	)2	42	65	85	120	ISO	200
Rjtc flow[U/s]	0.2H	036	(KM	l.l	1)9	2J	2.7»	33	417	44	5.6	8.9	117	誦R	W	33	41.6	55.6
How raatefni'lhj	0L4-2	MS	I.2-4	13.?	3-8	542	$•13	7.|6	M-22	*•22	10*2*	16-40	XS.M	UJ.10	5O-IID	MMSU	80-180	IOIK24O
Flow range[l/s]	• II4M6	o^wi<r	O.M 1.1	04 : 1 9	Ohl.? ?2	1.4-3.5	1.4 161	1 9-44	2.2 A. 1	22 *1	2.«7.«	4.4 11 1	69 1? 1	M222	I5€-5O5	1'74事 :	mo	27.8-66.7
MAX prv*«iN|bM|	21	2J	22	21	2J	31	22	22	22	22	21	2V	30	22	□	16	16	16
Motor powctfkW]	0J , .:2	03 , .J	0.37.3	0J7-4	OJ--55	W5	O.?M 5	1.5*11	1.1.15	2J-IS	1 l.l"	I.5-3U	?V-45	4G-I5	5M5	II.7S	11.75	I*MI ●
lawful	•I5-+I2O																	
MAX.efficiency[%]	44	46	M	57	64	62	M	63	70	«6	69	T3	75	76	77	74	73	T9
Type																		
COL	●	●	●	●	●	●	●	●	●	●	●	●	●	●	●	●	●	●
CDU	●	●	●	●	●	●	●	●	●	●	●	●	●	●	●	●	●	●
CDL Pipelines																		
DfNFbn«e	DN25	0N2S	DW5	DN52	DNJ2	I>S4rt	1>N*>	DN5O	DM5O	DN5O	DN5O	OK*$	DXHO	DKI«»	D . im	DNI25	DNI25	1>KISO
Oval fian| : e	G1	G1	Gl	Gl%	Gl%	GIM	OIV :											
CDU Pipchacs																		
DINFlaocc	DN25	DN25	DN25	DN32	DM32	DM0	DN40	DN5O	DX50	DN50	DN50	DN65	DNHO	DNIOO	DNIOO	DNI25	DNI25	DM54
C«VlM< fcvmk jiMWI	DNJ2	IW32	DN32	DN32	DMJ2	1)X50	DN50	DN50	DV50	DN50	DNW							
Pipe thread	ZUI%	ZGI<.	ZGI%	zum	ZGIH	ZG2	ZG2	ZG2	ZG2	ZG2	ZG2							
Ovainaftge	Gl	Gl	Gl	GIH	cm	Gl^	Gl%											

參 Performance table

Model	Driving motor (kW)	Driving motor |hp»	Q (m³/h)	0.4	0.6	0.8	1.0	1.2	1.4	1.6	1^	2.0
CI)Li-2	0.37	0.5		B	12.5	12	11.5	11	10.5	10	9.5	9
CDLI-3	0.37	0.5		19	18	17^	17	16.5	16	15	14	12
CDl.l-4	0.37	0.5		24	23.5	23	22.5	21,5	21	19	18	16
CDLI-5	0.37	0.5		30	29.6	29	28	27	26	24	22	20
CDLI-6	037	0.5		36	35.5	35	33.5	33	31	2X	26	23
CDL1-7	0.37	0.5		42	41	40.5	39	38	36	33	30	27
CDL1-8	0.55	0.75		48	47	46	45	43	41	38	34	30
OL1-9	0.55	0.75		54	53	52	51	40	46	43	39	33
CDL1-10	0.55	0.75		60	59	5H	57	54	51	4X	43	36
CDI.I-II	0.55	0.75		66	65	63	61	59	56	52	47	40
CDLI-12	0.75	1	H	72	71	69	67	64	61	57	51	44
CDLI-13	0.75	1	(m)	78	77	75	73	69	66	62	55	47
CDL1-15	0.75	1		R9	XK	86	M	79	76	71	63	55
CDL1-17	i.l	1.5		101	99	97	95	89	86	80	71	62
CDIJ-W	1.1	1.5		IB	110	108	106	99	96	8Q	79	69
CDL1-21	14	1.5		124	122	120	117	110	106	98	87	75
CDI.I-23	I.l	1.5		137	133	131	128	121	116	107	96	82
CDLI-25	1.5	2		149	U5	143	139	131	126	116	104	89
CDLI-27	1.5	2		161	157	155	150	MI	136	125	112	95
CDLI-30	1.5	2		178	175	171	166	157	150	139	124	106
CDL1-33	2.2	3		196	192	1X8	U3	173	165	154	137	118
CDLI-36	2.2	3		214	210	205	200	190	(8)	169	151	130

• Installation sketch

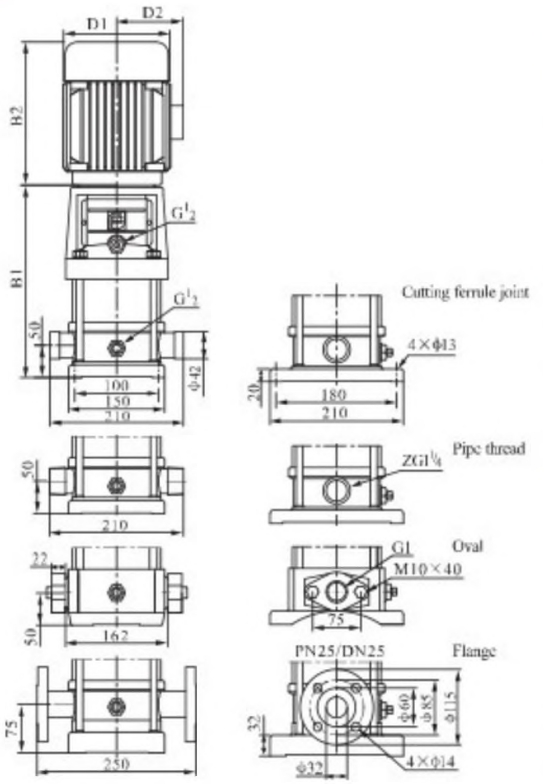

• Size and weight

Model	Size (mm) B1	B2	B1+B2	D1	D2	Weight (kg)
CDLI-2	258	225	483	I4K	117	20
CDLI-3	276	225	501	I4H	117	20
OLI -4	294	225	519	148	H7	21
CDLI-5	312	225	537	148	TIT	21
CDLI-6	330	225	555	I4K	117	22
CDLI-7	348	225	573	148	117	23
CDLI-8	366	225	591	14R	Ti7	24
CDLI-9	384	225	609	148	117	25
CDLI-10	402	225	627	148	117	26
CDLI-11	420	225	64?	MK	117	26
CDLI-12	44S	245	693	170	142	29
CDLI-B	466	245	711	no	142	Jo
CDLI-T7	502	245	747	no	142	5T
<DI1-17	538	245	783	no	142	33
CDLI-19	574	245	819	J70	142	34
CDLI-21	610	245	855	170	142	35
CDLI-23	646	245	891	170	142	36
CDLI-25	692	290	982	190	155	42
CDLI-27	728	290	1018	190	155	43
CDLI-30	7X2	290	1072	190	155	45
CDLI-33	836	290	1126	190	155	49
CDLI-36	890	290	1180	190	155	7T

CDLI-25 - 1-36 Mib-ciHinrclivn of pipeline has no oval flange conneclion.
Ihc overall dimensions of the smglc-pliasc motor and explosion-proof motor arc a littk different. Pls contact us for details.

Multistage Jockey Pumps CDLF

[CDLF]S.S.3O4 Vertical Multistage Pump Stainless Steel Centrifugal Pump

CDL/ CDLF is a kind of multifunctional products.It can be used to convey various medium from tap waterto industrial liquid
at different temperature and with di-fferent flow rate and pressure. CDL type is applicable toconveying non-corrosive liquid,
while CDLF is suitablefor slightly corrosive liquid.

Thin, clean, non-flammable and non-explosive liquidcontaining no solid granules and fibers.

• Liquid temperature:

Normal temperature type: -I5C ～+70'C，

Hot water type:-15C~+120C

•Ambient temperature: up to +40C.

•Altitude:up to 1000m

vertical Multistage Pump

Technical Data
Lift range:1-21BAR
Flow range:2m^3/h

ADVANTAGES

Eight Characteristics

Energy-saving Certificate

Large Flow Capacity

YE3 Motor IP55 ClassF All Copper Wire

Stainless Steel 304 Impeller & Shaft

Anti-corrosive Coating

NSK Bearing

Costormized Sizes & Pumps

Good Quality & Service 2-Years Guarantee

PRODUCT INFORMATION

CDL/ CDLF is a kind of multifunctional products.lt can be used to convey various medium from tap waterto
industrial liquid at different temperature and with di-fferent flow rate and pressure.
CDL type is applicable

toconveying non-corrosive liquid, while CDLF is suitablefor slightly corrosive liquid.
•Water supply: Water filter and transport in Waterworks, boosting of main pipeline, boosting in high-rise buildings.
•Industrial boosting: Process flow water system, cleaning system, high-pressure washing system, fire fightingsystem.
•Industrial liquid conveying: Cooling and air-conditioning system, boiler water supply and condensing system,.machine-associated purpose, acids and alkali.
•Water treatment: Ultrafiltration system, reverse osmosis system, istillation system, separator, swimming pool.
•Irrigation: Farmland irgation, spray irrigation, dripping irrigation.

Thin, clean, non-flammable and non-explosive liquidcontaining no solid granules and fibers.
•Liquid temperature:
Normal temperature type: -I5C ~+70'C,
Hot water type:-15C*+120C
•Ambient temperature: up to +40C.
•Altitude:up to 1000m

•Full-enclosed air -blast two-pole standard motor
•Protection class: 1P55
• Insulation class: F
•Standard voltage:50Hz: 1 x 220-230/ 240V
3 x 200-220/ 346-380V
3 x 220-240/ 380-415V
3 x 380-415V

Definition of Model

CDL/CDLF1,2,3,4,5,8,10,12,15,16 and 20

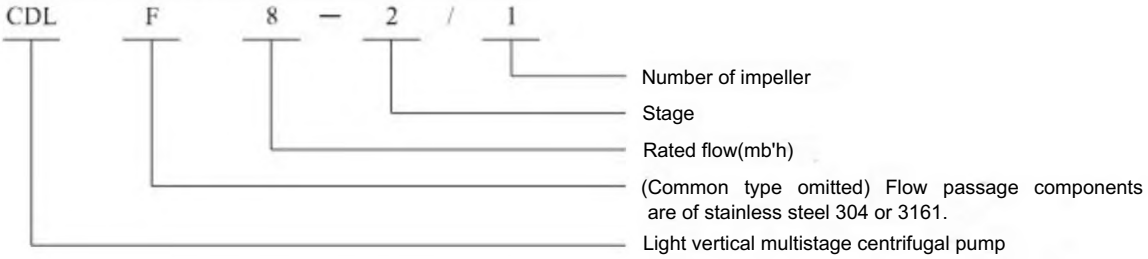

CDL/CDLF32,42,65.85,120 and 150

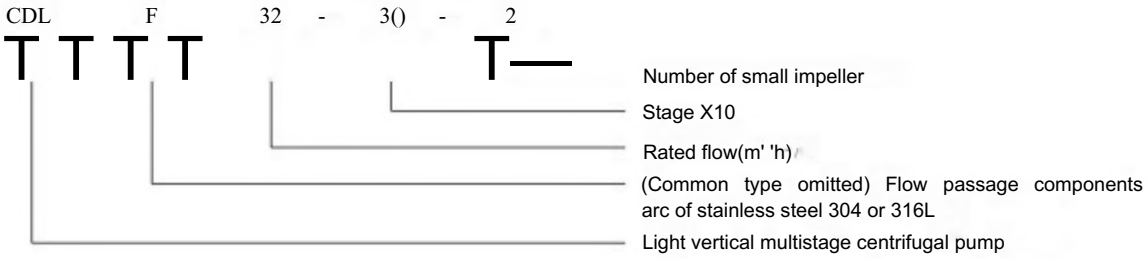

CDL/CDLF200

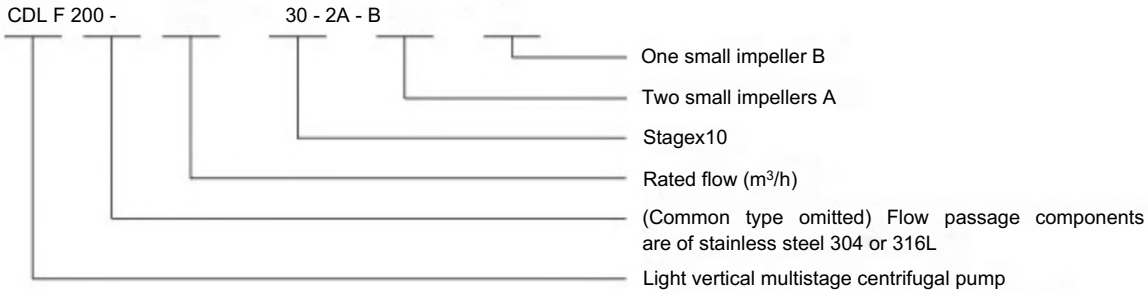

• Max working pressure

Model	Max. pivssurdbar)
CDLl,23A5Flangc	25
CDL(F) 1.23.4,5 Cher F lange	16
CDLFI ,23.4.5 Flangc^culting ferrule joint,pipe thread	25
CDL3J0J2J5.16J0 Flange	25
CDL(F)8 Over Flange	16
CDLFK10,12,15,16J0 Flange.cutting fcmile joint.pipe thread	25
CDL32	
32-IO-I-32-8O 32-90-2-32-160	16(30) 30
CDLF32	30
CDL42	
42-10-1^42-60-2 42-60-42-90 42-100-2-42-130-2	16(30) 25(30) 30
CDLF42	
42-10-1-42-90 42-100-2-42-130-2	25(30) 30
CDL65	
65-10-1-65-50-2 65-50-1-65-80-1	16(25) 25
CDL85	
85-10-1^85-40-2 85-40-A5-60	16(25) 25
CDLF65,K5	25
CDUCDLFI20J 50,200	20

Pumps with pressure inside brackets need to specify especially.

• Max. Ambient temperature

When the pump operates under ambient temperature higher than 40*C or under altitude higher than 1000m, because of low air density and poor cooling effects, the motor output power P2 will be decreased to certain extent. If the pump is operated under the above-said conditions, il should be equipped with motor of higher power.

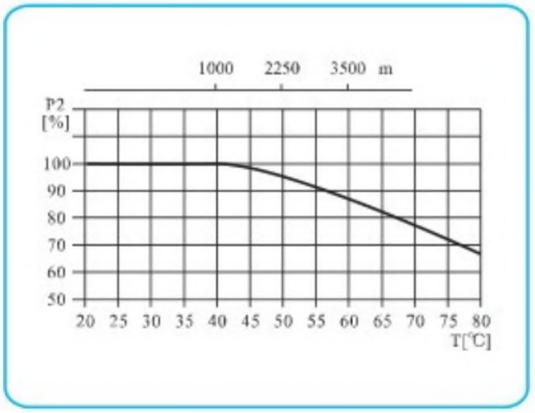

• Performance scope

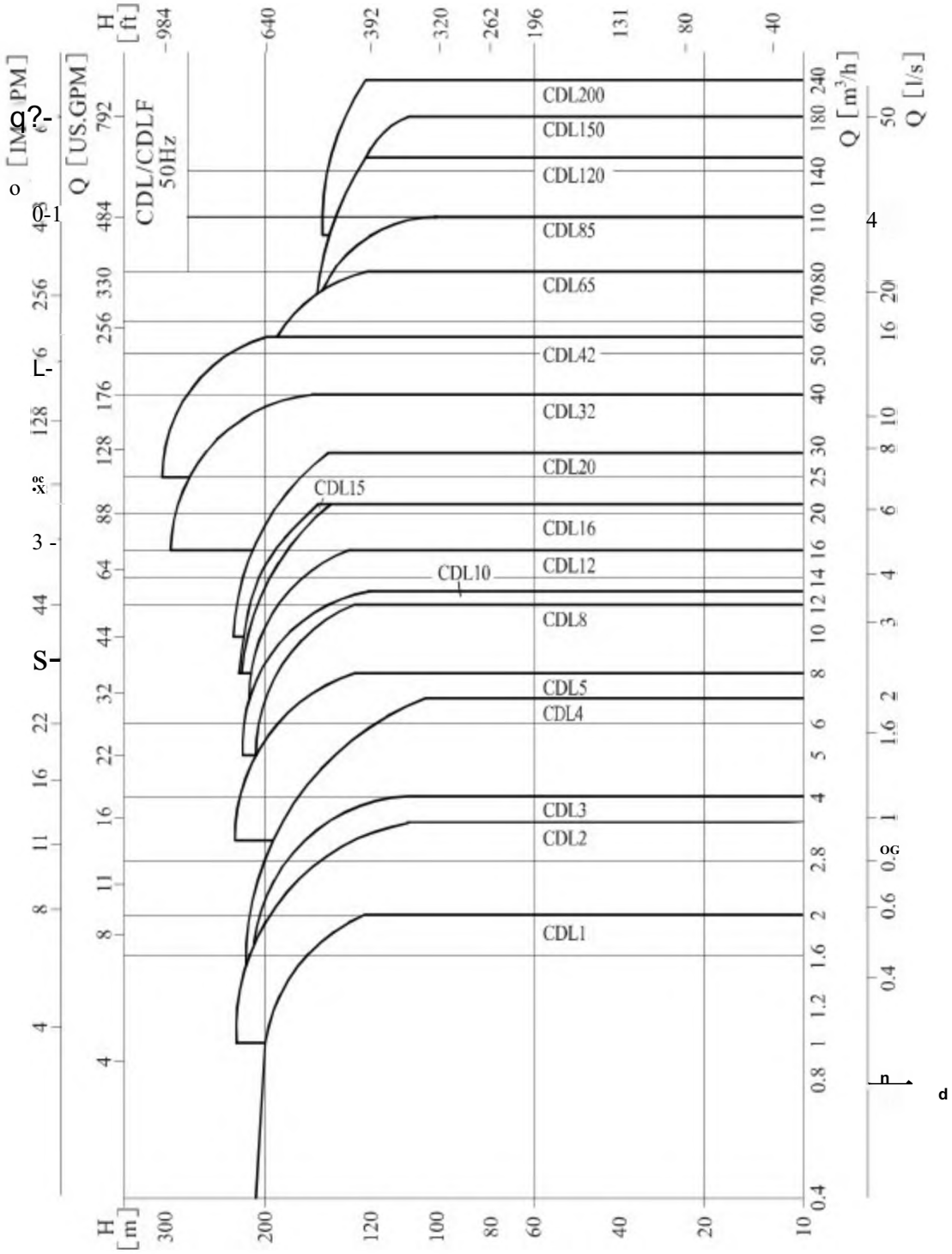

• Product range

Dctcnpoaa	CDLI	CDU	CDU	C1M.4	CDL5	CPU	CVL10	CIH.I2	C1M.1S	CIXJ6	CIMJO	CDU2	CDL42	CDL65	(DUS	"MJX>	(DU 50	CDL200
IU<e flow[m³/h]	1	2	3	4	S	s	10	12	IS	16	20	)2	42	65	S$	120	ISO	200
Rmc flow[U/s]	0.2R	056	O.M	l.l	1.39	22	2.7»	3J	4.1?	44	5.fr	建，	117	IK	w	35	41 >	55*
now ra^ni'hl	0L4.2	l>J.S	1.2-1	13.7	3-8	5.12	$*IJ	7.|6	M-22	*•22	ID-2X	16-40	2S-5S	IO.MO	50-110	60-150	80-180	IOIK24O
flow nMfdU]	• II4M6	o^wi»r	0.W-1.I	04 : 1 9	0.83-2.22	1.4-3.3	1.4-3.61	1 944	2.2 Al	12*. ,	2.«7.«4.本	III	69 -15.3	M 1 22 2	13.8-30.5	K7-4I 7	22-SO	2T.U661
MAX prvMMr«HhM]	21	23	22	21	2>	21	22	22	22	22	21	29	30	22	1?	16	16	16
Motor pcm erf kW]	oj , .ri	OJ , .J	0.37-3	037-4	or.55	W5	0 <5-7.2	1.5*11	1.1.15	2J-IS	1 1.185	1.5-30	?U-45	4CM5	”《45	11.75	11.73	IHMI ●
lan^'C]	-15~+120																	
MAXxflk«w>(%]	44	46	M	57	64	62	68	63	70	66	69	*n*	75	?6	*n*	74	73	*T9*
Type																		
cot	參	拳	●	●	●	●	參	●	●	參	●	●	●	參	●	參	●	●
CDLF	參	●	參	●	●	拳	●	●	●	●	●	●	●	●	●	●	●	●
<I>L P<*iinr<																		
DINFlMi«e	DN25	DN2S	DN25	DN32	DNJ2	DS4O	DN4O	DNM»	DM5O	DN5O	DN50	DK6S	DNRO	DKt«»	D ` k«i	DNI25	DNI25	DKISO
Oval Fian|^	*QI*	G1	Gl	01%	G1*4	OIK	Gl%											
COLT PipcliKa																		
DINFlaocc	DN25	DN25	DN25	DN32	DN32	DM0	DN-W	DN50	DX50	DN50	DN50	DW	DN»0	DNIOO	DM00	DN125	DNI25	DN150
CMmf fcvmk joint	DNJ2	IW32	DN32	DN32	DMJ2	DK50	DN50	DN50	DV50	DN50	DN50							
Pipe thread	ZGI%	zur.	ZGI%	zum	ZGI^	ZG2	ZG2	ZG2	ZG2	ZG2	ZU2							
Ovalɔtaft||c	Gl	Gl	Gl	*GV4*	Gl%	Gl^	Gl%											

參 Performance table

Model	Driving motor (kW)~(hpF~		Q (m³/h)	0.4	0.6	0.8	1.0	1.2	1.4	1.6	1.8	2.0
CDLl-2	0.37	0.5		B	12.5	12	11.5	II	10.5	10	9.5	9
CDLI-3	0.37	0.5		19	18	17.5	17	16.5	16	15	14	12
CDl.M	0.37	0.5		24	23.5	23	22.5	21.5	21	19	19	16
CDLI-5	0.37	0.5		30	29.6	29	28	27	26	24	22	20
CDLI-6	037	0.5		36	355	35	33.5	33	31	2R	26	23
CDL1-7	0J7	0.5		42	4垂	40.5	39	38	36	33	30	27
CDL1-8	0.55	0.75		48	47	46	45	43	41	38	34	30
OL1-9	0.55	0.75		54	53	52	51	4<)	46	43	39	33
CDL1-10	0.55	0.75		60	59	5»	57	54	51	4X	43	36
CDI.I-ll	0.55	0.75		66	65	63	61	59	56	52	47	40
CDLI-12	0.75	1	H	72	71	69	67	64	61	57	51	44
CDLI-B	0.75	1	(m)	78	77	75	73	69	66	62	55	47
CDL1-15	0.75	1		R9	期	86	M	79	76	n	63	55
CDL1-17	LI	1.5		101	99	97	95	89	86	80	71	62
CDIJ-W	14	1.5		113	no	108	106	99	96	89	79	69
CDL1-21	14	1.5		124	122	120	117	110	106	98	87	75
CDI.I-23	1.l	1.5		137	133	131	128	121	116	107	96	82
CDLl-25	1.5	2		149	145	143	139	131	126	116	104	89
CDL1-27	1.5	2		161	157	155	150	141	136	125	112	95
CDL1-30	1.5	2		178	175	171	166	157	150	139	124	106
CDL1-33	2.2	3		196	192	1K8	lv² ..	173	165	154	137	ns
CDL1-36	2.2	3		214	210	205	200	190	1SI	169	151	130

Installation sketch

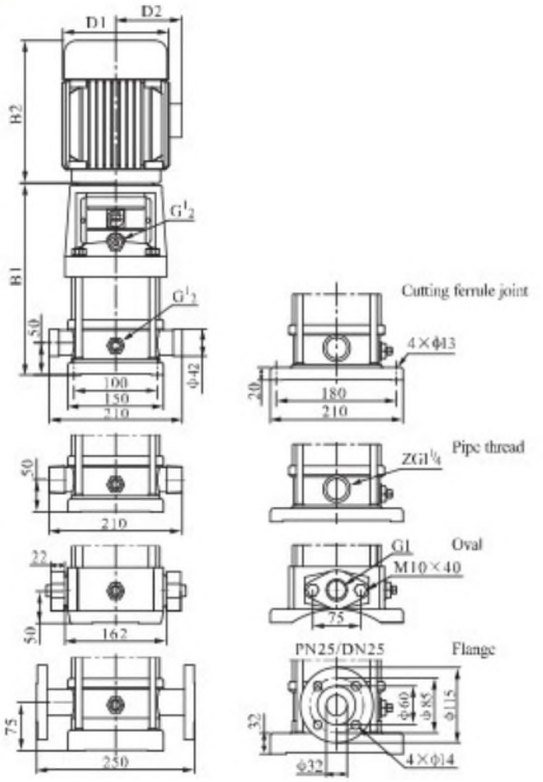

• Size and weight

Model	Size (mm)					Weight (kf)
	Bl	B2	BHB2	DI	D2	
CDLI-2	258	225	4«	I4K	117	20
CDLl-3	276	225	501	148	II'	20
CDLI-4	294	225	519	148	117	21
CDLI-5	312	225	537	148	117	21
CDLI-6	330	225	555	MH	117	22
CDLI-7	348	225	573	148	117	23
CDLI-8	366	225	591	148	117	24
CDLI-9	3M	225	609	149	in	25
CDLI-10	402	225	627	148	117	26
CDLI-11	420	225	645	148	H7	26
CDLI-12	448	245	693	170	142	29
CDLI-13	466	245	711	170	142	30
CDLi-15	502	245	747	170	142	31
CDLI-17	538	245	783	170	142	33
CDLI-19	574	245	819	170	14?	34
CDLI-21	610	245	855	170	142	35
CDLI-23	646	245	891	170	142	36
CDl.l-25	692	290	9»2	190	155	42
CDLI-27	728	290	1018	190	155	43
CDLl-?0	7^2	2%	1072	190	155	45
CDLI-33	836	290	1126	190	155	49
CDLI-36	890	2%	1180	190	155	51

CDLl-25 -)-36 sub-connrclion of pipeline has no ovul flange connection.
Ihc overall dimensions of the single-phase motor and explosion-proof motor arc a little different. Pls contact us for details.

Other sizes can be on the request.

vertical Multistage Pump

Technical Data
Lift range:1-21BAR
Flow range:2m^3/h

ADVANTAGES

Eight Characteristics

Energy-saving Certificate

Large Flow Capacity

YE3 Motor IP55 ClassF All Copper Wire

Stainless Steel 304 Impeller & Shaft

Anti-corrosive Coating

NSK Bearing

Costormized Sizes & Pumps

Good Quality & Service 2-Years Guarantee

PRODUCT INFORMATION

CDL/ CDLF is a kind of multifunctional products.lt can be used to convey various medium from tap waterto
industrial liquid at different temperature and with di-fferent flow rate and pressure.
CDL type is applicable

toconveying non-corrosive liquid, while CDLF is suitablefor slightly corrosive liquid.
•Water supply: Water filter and transport in Waterworks, boosting of main pipeline, boosting in high-rise buildings.
•Industrial boosting: Process flow water system, cleaning system, high-pressure washing system, fire fightingsystem.
•Industrial liquid conveying: Cooling and air-conditioning system, boiler water supply and condensing system,.machine-associated purpose, acids and alkali.
•Water treatment: Ultrafiltration system, reverse osmosis system, istillation system, separator, swimming pool.
•Irrigation: Farmland irgation, spray irrigation, dripping irrigation.

Thin, clean, non-flammable and non-explosive liquidcontaining no solid granules and fibers.
•Liquid temperature:
Normal temperature type: -I5C ~+70'C,
Hot water type:-15C*+120C
•Ambient temperature: up to +40C.
•Altitude:up to 1000m

•Full-enclosed air -blast two-pole standard motor
•Protection class: 1P55
• Insulation class: F
•Standard voltage:50Hz: 1 x 220-230/ 240V
3 x 200-220/ 346-380V
3 x 220-240/ 380-415V
3 x 380-415V

Definition of Model

CDL/CDLF1,2,3,4,5,8,10,12,15,16 and 20

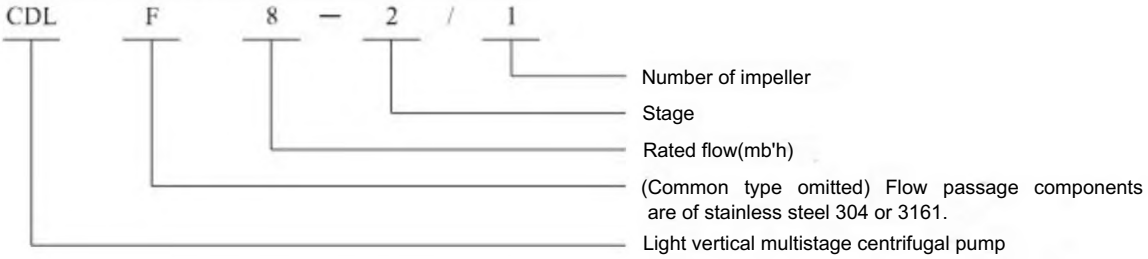

CDL/CDLF32,42,65.85,120 and 150

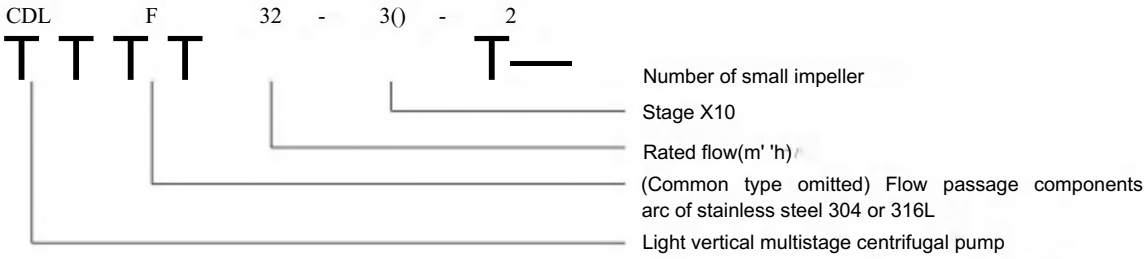

CDL/CDLF200

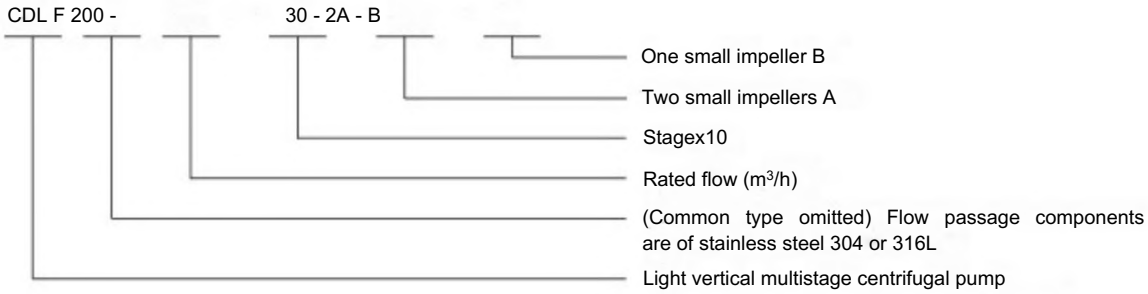

• Max working pressure

Model	Max. pivssurdbar)
CDLl,23A5Flangc	25
CDL(F) 1.23.4,5 Cher F lange	16
CDLFI ,23.4.5 Flangc^culting ferrule joint,pipe thread	25
CDL3J0J2J5.16J0 Flange	25
CDL(F)8 Over Flange	16
CDLFK10,12,15,16J0 Flange.cutting fcmile joint.pipe thread	25
CDL32	
32-IO-I-32-8O 32-90-2-32-160	16(30) 30
CDLF32	30
CDL42	
42-10-1^42-60-2 42-60-42-90 42-100-2-42-130-2	16(30) 25(30) 30
CDLF42	
42-10-1-42-90 42-100-2-42-130-2	25(30) 30
CDL65	
65-10-1-65-50-2 65-50-1-65-80-1	16(25) 25
CDL85	
85-10-1^85-40-2 85-40-A5-60	16(25) 25
CDLF65,K5	25
CDUCDLFI20J 50,200	20

Pumps with pressure inside brackets need to specify especially.

• Max. Ambient temperature

When the pump operates under ambient temperature higher than 40*C or under altitude higher than 1000m, because of low air density and poor cooling effects, the motor output power P2 will be decreased to certain extent. If the pump is operated under the above-said conditions, il should be equipped with motor of higher power.

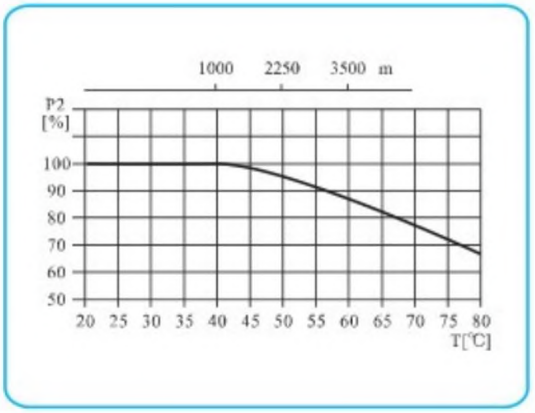

• Performance scope

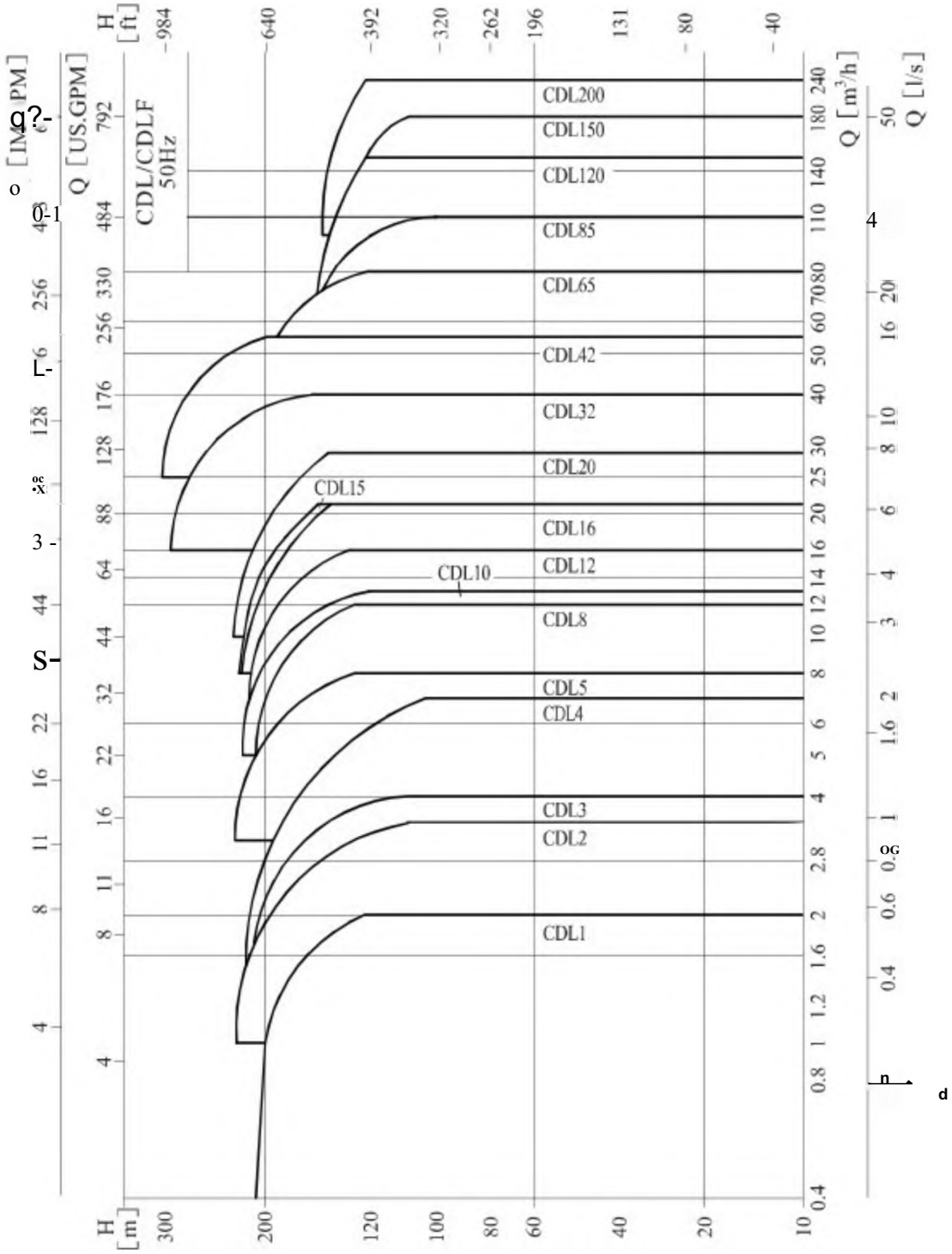

• Product range

Dctcnpoaa	CDLI	CDU	CDU	C1M.4	CDL5	CPU	CVL10	CIH.I2	C1M.1S	CIXJ6	CIMJO	CDU2	CDL42	CDL65	(DUS	"MJX>	(DU 50	CDL200
IU<e flow[m³/h]	1	2	3	4	S	s	10	12	IS	16	20	)2	42	65	S$	120	ISO	200
Rmc flow[U/s]	0.2R	056	O.M	l.l	1.39	22	2.7»	3J	4.1?	44	5.fr	建，	117	IK	w	35	41 >	55*
now ra^ni'hl	0L4.2	l>J.S	1.2-1	13.7	3-8	5.12	$*IJ	7.|6	M-22	*•22	ID-2X	16-40	2S-5S	IO.MO	50-110	60-150	80-180	IOIK24O
flow nMfdU]	• II4M6	o^wi»r	0.W-1.I	04 : 1 9	0.83-2.22	1.4-3.3	1.4-3.61	1 944	2.2 Al	12*. ,	2.«7.«4.本	III	69 -15.3	M 1 22 2	13.8-30.5	K7-4I 7	22-SO	2T.U661
MAX prvMMr«HhM]	21	23	22	21	2>	21	22	22	22	22	21	29	30	22	1?	16	16	16
Motor pcm erf kW]	oj , .ri	OJ , .J	0.37-3	037-4	or.55	W5	0 <5-7.2	1.5*11	1.1.15	2J-IS	1 1.185	1.5-30	?U-45	4CM5	”《45	11.75	11.73	IHMI ●
lan^'C]	-15~+120																	
MAXxflk«w>(%]	44	46	M	57	64	62	68	63	70	66	69	*n*	75	?6	*n*	74	73	*T9*
Type																		
cot	參	拳	●	●	●	●	參	●	●	參	●	●	●	參	●	參	●	●
CDLF	參	●	參	●	●	拳	●	●	●	●	●	●	●	●	●	●	●	●
<I>L P<*iinr<																		
DINFlMi«e	DN25	DN2S	DN25	DN32	DNJ2	DS4O	DN4O	DNM»	DM5O	DN5O	DN50	DK6S	DNRO	DKt«»	D ` k«i	DNI25	DNI25	DKISO
Oval Fian|^	*QI*	G1	Gl	01%	G1*4	OIK	Gl%											
COLT PipcliKa																		
DINFlaocc	DN25	DN25	DN25	DN32	DN32	DM0	DN-W	DN50	DX50	DN50	DN50	DW	DN»0	DNIOO	DM00	DN125	DNI25	DN150
CMmf fcvmk joint	DNJ2	IW32	DN32	DN32	DMJ2	DK50	DN50	DN50	DV50	DN50	DN50							
Pipe thread	ZGI%	zur.	ZGI%	zum	ZGI^	ZG2	ZG2	ZG2	ZG2	ZG2	ZU2							
Ovalɔtaft||c	Gl	Gl	Gl	*GV4*	Gl%	Gl^	Gl%											

參 Performance table

Model	Driving motor (kW)	Driving motor (hp>	Q (m³/h)	0.4	0.6	0.8	1.0	1.2	1.4	1.6	1.8	2.0
CDLl-2	0.37	0.5		B	12.5	12	11.5	II	10.5	10	9.5	9
CDLI-3	0.37	0.5		19	18	IZ5	17	16.5	16	15	14	12
CDl.M	0.37	0.5		24	23.5	23	22.5	21.5	21	19	19	16
CDLI-5	0.37	0.5		30	29.6	29	28	27	26	24	22	20
CDLI-6	037	0.5		36	355	35	33.5	33	31	2R	26	23
CDL1-7	0.37	0.5		42	4垂	40.5	39	38	36	33	30	27
CDL1-8	0.55	0.75		48	47	46	45	43	41	38	34	30
OL1-9	0.55	0.75		54	53	52	51	4<)	46	43	39	33
CDL1-10	0.55	0.75		60	59	58	57	54	51	4X	43	36
CDI.I-ll	0.55	0.75		66	65	63	61	59	56	52	47	40
CDLI-12	0.75	1	H	72	71	69	67	64	61	57	51	44
CDLI-B	0.75	1	(m)	78	77	75	73	69	66	62	55	47
CDL1-15	0.75	1		R9	期	86	M	79	76	n	63	55
CDL1-17	LI	1.5		101	99	97	95	89	86	80	71	62
CDIJ-W	14	1.5		IB	no	108	106	99	丸	89	79	69
CDL1-21	14	1.5		124	122	120	117	110	106	9H	87	75
CDLI-23	1.l	15		137	133	131	128	121	116	107	96	82
CDLI-25	1.5	2		149	145	143	139	131	126	116	104	89
CDLI-27	1.5	2		161	157	155	150	141	136	125	112	95
CDLI-30	1.5	2		178	175	171	166	157	150	139	124	106
CDL1-33	2.2	3		196	192	1K8	1X3	173	165	154	137	11S
CDLI-36	2.2	3		214	210	205	200	190	1RI	169	151	130

參 Installation sketch

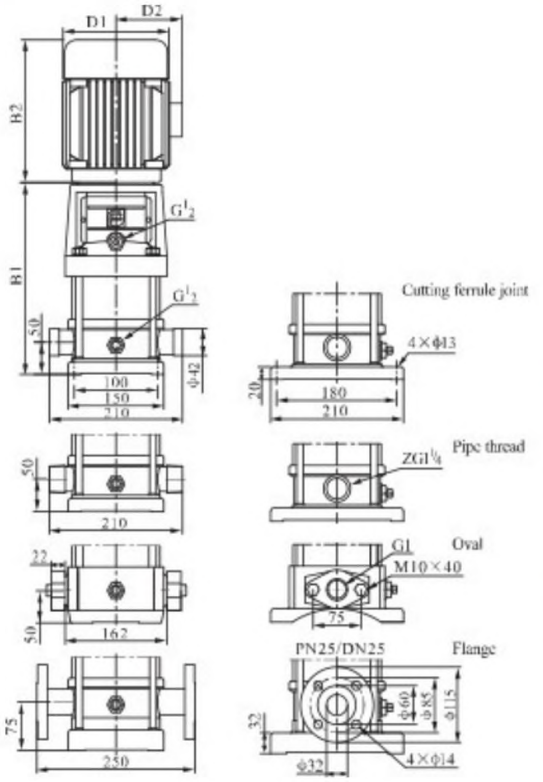

• Size and weight

Model	Size (mm) B1	B2	B1+B2	D1	D2	Weight (kg)
CDLI-2	258	225	4X3	I4K	117	20
CDLI-3	276	225	501	I卟	117	20
CDLI-4	294	225	519	148	117	21
CDLI-5	312	225	537	I4K	II7	21
CLJLI-6	330	225	555	1邪	ir	22
CDLI-7	548	225	~573~	148	Ti7	23
CDLI-8	366	225	591	M8	Ti7	24
CDLI-9	384	225	609	I4K	117	25
CDLI-10	402	225	627	U8	117	26
CDLI-11	420	225	645	148	TF	26
CDLI-12	448	245	693	170	142	29
CDLI-13	466	245	711	no	M2	Jo
CDLI-15	502	245	747	170	U2	5T
CDLI-17	538	245	783	J70	142	33
<DL -19	574	245	819	rro	J42	34
CDLI-21	610	245	855	no	M2	35
CDLI-23	f»46	245	891	170	142	36
CDLI-25	692	290	9打	190	J55	42
CDLI 互	728	290	1018	190	J55	43
CDLI-30	7«2	290	1072	J90	155	45
CDLI-33	836	290	1126	190	1^	49
CDLI-36	890	290	1180	Too	155	IF

CDLI-25 -)-36 sub-connrclion of pipeline has no ovul flange connection.

Ihc overall dimensions of the single-phase motor and explosion-proof motor arc a little different. Pls contact us for details.

Multistage Jockey Pumps PV

[PV] High Pressure Multistage Vertical Centrifugal Jockey Pump Factory

TECHNICAL DESCRIPTION

- New vertical multistage centrifugal pump

-Original design by PURITY

- Both square motor & round motor available
- YE3 high efficient motor, with protection IP55 class F

-Pump case with anti-corrosive coating

- Impeller in techno-polimer
- Shaft in stainless steel AISI 304 or galvanized iron
- Suction and discharge port in cast iron G20 thread
- Quality NSK bearing, wear resistance mechanical seal

Product Description

TECHNICAL DESCRIPTION
New vertical multistage centrifugal pump
Original design by PURITY
Both square motor & round motor available
YE3 high efficient motor, with protection IP55 class F
Pump case with anti-corrosive coating
Impeller in techno-polimer
Shaft in stainless steel AISI 304 or galvanized iron
Suction and discharge port in cast iron G20 thread
Quality NSK bearing, wear resistance mechanical seal

APPLICATIONS
Suitable for use with clean water and liquids that are not chemically aggressive towards the materials from which the pump is made.
The high efficiency and adaptability of these pumps to even the most unusual of applications, makes them ideal for use in the domestic, civil and industrial sectors; in particular for the distribution of water in combination with pressure sets and for pressure boosting.

USING LIMITS
Liquid temperature between -10°C and +120°C
Ambient temperature up to +50°C
Max. working pressure 25 bar

Continuous service SI

TECHNICAL DATA / *DATOS TiCNICOS* **50 Hz n=29001 /min**

MODEL *MODELO*	Power *Potencia*		us gpm	(^DELIVERY / *CAUDAL*																				DN
				0	5	11	13	16	19	21	24	26	29	32	37	42	48	53	58	63	69	74	79	
			Wmin	0	20	40	50	60	70	80	90	100	110	120	140	160	180	200	220	240	260	280	300	
	kw	hp	m^h	0	1«2	2-4	3	3.6	4.2	4.8	5.4	6	6.6	7.2	8.4	9.6	10.8	12	13.2	14.4	15.6	16.8	18	mm
PV4x7/1.5	1.1	1.5		60.7	56.8	52.1	49	45.9	42.8	38.9	35	30.3	25.7	20.2										25x25
PV 4x9/2	1.5	2		78	73	67	63	59	55	50	45	39	33	26										25x25
PV 4x13/3	2.2	3		113	IOS	96.8	91	85-2	79.4	72.2	6S	56.3	47.7	37.5										25x25
PV 4x16/4	3	4		139	130	119	112	105	97.8	88.9	80	69.3	58.7	46.2										25x25
PV 6* 5/1.5	1.1	1.5		44.4				1355	33.3	30.9	28.4	26.1	23.4	20.2	14.3	6.8								32x32
PV 6x8/2	1.5	2		71.1				56.7	53.2	49.5	45.5	41.8	37.5	32.4	22.9	10.9								32x32
PV 6x11/3	2.2	3		97.7				78	73.2	68	62.5	57.5	51.5	44.5	31.5	IS								32x32
PV 6x15/4	3	4		133				106	99.8	92.7	85.2	78.4	70.2	60.7	43	20.5								32x32
PV8x4/1.5	1.1	1.5		36.8						30	28.4	27.2	26	24.4	21.2	17.6	132	9.2	4.8					40x40
PV 8x7/2	1.5	2	H(m)	64.4						52.5	49.7	47.6	45.5	42.7	37.1	30.8	23.1	16.1	8.4					40x40
PV 8x9/3	2.2	3		82.8						67.5	63.9	61.2	58.5	54.9	47.7	39.6	29.7	20.7	10.8					40x40
PV 8x12/4	3	4		110						90	85.2	81.6	78	73.2	63.6	52.8	39J6	27.6	14.4					40x40
PV 8x16/5.5	4	5.5		147						120	114	109	104	97.6	84.8	70.4	523	36.8	19.2					40x40
PV 12x3/1.5	1.1	1.5		31								25.4	24.7	24	22.4	20.6	18.4	16.2	13.3	10.9	8.3	5.1	2	50x50
PV 12x5/2	1.5	2		517								42.4	41.2	40	37.3	34.3	307	27	22.2	18.2	13.8	8.5	3.3	50x50
PV 12x7/3	2.2	3		72.3								593	57.6	56	523	48.1	43	37.8	31	25.5	19.4	11.9	4.7	50x50
PV 12x9/4	3	4		93								76.2	74.1	72	67.2	61.8	S52	48.6	39.9	32.8	24.9	15.4	6	50x50
PV 12x12/5.5	4	5.5		122								102	98.8	96	89.6	82.4	73^	64.8	512	43.8	33.2	20.5	8	50x50
PV 12x17/75	5.5	7.5		176								144	140	136	127	117	104	91.8	75.4	62	47	29	11.3	50xS0

MODEL *MODELO*	Power *Potencia*		us gpm	Q= DE LIVE RY / *CAUDAL*									DN
				0	26	53	79	106	132	159	185	211	
			t/min	0	100	200	300	400	500	600	700	800	
	kw	hp	m³/h	0	6	12	18	24	30	36	42	48	mm
PV 30x7/10	7.5	10		104	100	93	83	74	64	49	31	4	50x50
PV 30x9/12	9.2	12.5	H(m)	133	128	119	108	%	82	63	40	5	
PV 30x11/15	11	15		163	156	145	132	116	99	77	48	6	65x65

PERFORMANCE CURVE / *CURVAS DEFUNCIONAMIENTO*

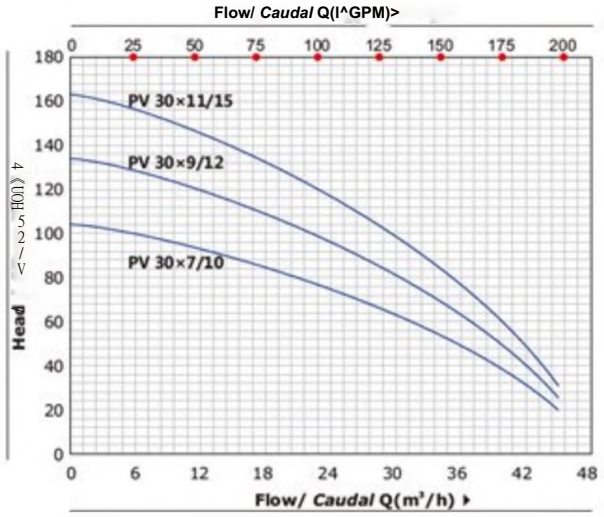

DIMENSIONS AND WEIGHT / *DIMENSIONS Y PESOS*

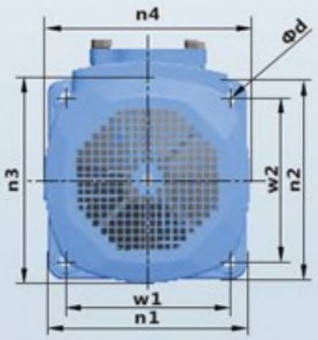

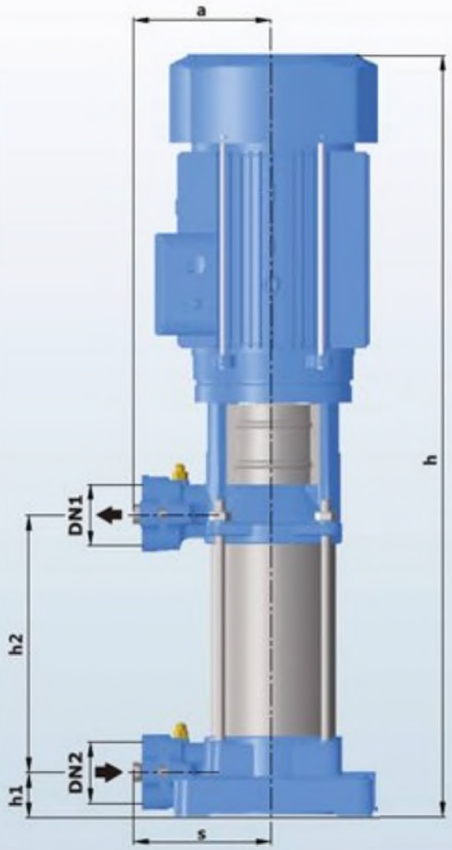

MODEL *MODELO*	DIMENSIONS / *DIMENSIONES* mm															kg	
	DN1	DN2	N	a	s	h	hi	h2	wl	w2	n1	n2	n3	n4	d	1-	3-
PV4x7/1.5	25/32	25/32	7	141	141	720	4S.S	261.5	165	16S	202	202	175	ns	12	28.0	27.0
PV 4x9/2	25/32	25/32	9	141	141	790	45.5	331.5	16S	165	202	202	175	175	12	33.0	32.0
PV 4x13/3	25/32	«/32	B	141	141	930	4S.S	471.5	16S	165	202	202	175	175	12	38.0	37.0
PV 4x16/4	25/32	25/32	16	141	141	1082	45.5	576.5	16S	165	202	202	195	19S	12	48.0	47.0
PV6x5/1.5	25/32	25/32	5	141	141	650	4S.S	191.S	165	165	202	202	175	175	12	26.0	2S.0
PV 6x8/2	25/32	25/32	8	141	141	755	45.5	296.5	16S	165	202	202	175	175	12	31.0	30.0
PV 6x11/3	25/32	25/32	11	141	141	860	45.5	401.5	165	165	202	202	175	175	12	36.0	35.0
PV 6x15/4	25/32	25/32	IS	141	141	1047	45.5	S41.5	16S	165	202	202	195	195	12	46.0	4S.0
PV8x4/1.5	40/50	40/50	4	141	141	615	4S.5	156.5	165	165	202	202	175	175	12	26.0	25.0
PV 8x7/2	40/50	40/50	7	141	141	720	45.5	261.5	16S	165	202	202	175	175	12	31.0	30.0
PV 8x9/3	40/50	40/50	9	141	141	790	4S.S	331.5	16S	16S	202	202	17S	17S	12	36.0	3S.0
PV 8x12/4	40/50	40/50	12	141	141	942	45.5	436.5	165	16S	202	202	195	195	12	46.0	4S.0
PV 8x16/5.5	40/50	40/50	16	141	141	1082	45.S	576.5	165	165	202	202	195	195	12	-	50.0
PV 12x3/L5	40/50	40/50	3	141	141	580	45.5	121.5	165	16S	202	202	175	175	12	25.0	24.0
PV 12x5/2	40/50	40/50	5	141	141	650	45.S	191.S	165	16S	202	202	175	17S	12	30.0	29.0
PV 12x7/3	40/50	40/50	7	141	141	720	45.5	261.5	165	16S	202	202	175	175	12	35.0	34.0
PV 12x9/4	40/50	40/50	9	141	141	837	45.5	331.5	165	165	202	202	195	195	12	45.0	44.0
PV 12x12/5.5	40/50	40/50	12	141	141	942	45.5	4J6.5	165	16S	202	202	195	195	12	-	50.0
PV 12x17/7.5	40/50	40/50	17	141	141	1167	45.5	611.5	16S	16S	202	202	204	204	12	-	60.0
PV 30x7/10	50/65	50/65	7	170	170	1046	62	416	187	187	230	230	260	260	12	-	86.0
PV 30x9/12	50/65	50/65	9	170	170	11S3	62	523	187	187	230	230	260	260	12	-	92.0
PV 30xII/IS	50/65	50/65	n	170	170	1260	62	630	187	187	230	230	260	260	12	-	100

Product Description

TECHNICAL DESCRIPTION
New vertical multistage centrifugal pump
Original design by PURITY
Both square motor & round motor available
YE3 high efficient motor, with protection IP55 class F
Pump case with anti-corrosive coating
Impeller in techno-polimer
Shaft in stainless steel AISI 304 or galvanized iron
Suction and discharge port in cast iron G20 thread
Quality NSK bearing, wear resistance mechanical seal

APPLICATIONS
Suitable for use with clean water and liquids that are not chemically aggressive towards the materials from which the pump is made.
The high efficiency and adaptability of these pumps to even the most unusual of applications, makes them ideal for use in the domestic, civil and industrial sectors; in particular for the distribution of water in combination with pressure sets and for pressure boosting.

USING LIMITS
Liquid temperature between -10°C and +120°C
Ambient temperature up to +50°C
Max. working pressure 25 bar

Continuous service SI

TECHNICAL DATA / *DATOS TiCNICOS* **60 Hz n=34501/min**

MODEL *MODELO*	Power *Potencia*		us 卯m	^DELIVERY / *CAUDAL*																				DN
				0	5	11	13	16	19	21	24	26	29	32	37	42	48	53	58	63	69	74	79	
			l/min	0	20	40	50	60	70	80	90	100	110	120	140	160	180	200	220	240	260	280	300	
	kw hp		rr^/h	0	1.2	2.4	3	3.6	4.2	4.8	5.4	6	6.6	72	8.4	9.6	10.8	12	112	14.4	15.6	16.8	18	mm
PV 4x4/15	TI~L5~			52	49	46	44	41	39	37	33	30	27	23										
PV 4x6/2	IS 2			77	74	69	66	63	S8	55	50	45	40	34										
PV 4x8/3	22	3		104	99	92	88	84	78	73	66	60	S3	4S										
PV 4x10/4	3	IT*		129	124	116	no	104	97	91	83	75	66	57										
PV 4x13/5.5	4	5.5		168	161	150	143	B6	126	119	108	97	86	74										
PV 4x16/7.5	55	7.5		206	198	185	177	167	156	146	133	119	106	91										2Sx2S
PV 6x3/1.5	1.1	1.5		40				36	35	33	31	30	28	26	22	17								32x32
PV 6x5/2	1.5	2		66				60	58	5S	52	50	47	43	36	28								
PV 6x7/3	la ZE			92				8S	81	78	73	70	66	61	51	40								
PV 6x9/4	3	4		119				109	104	100	94	90	84	78	65	51								
PV 6x12/5.5	4	55		159				145	139	133	125	120	113	104	87	68								
PV 6x16/7.5	5.5	7.5		197				180	173	165	1S6	150	140	130	108	85								
PV 8x4/2	IS 2		H(m)	53						44	42	41	39	37	33	29	23	17	12					
PV 8x6/3	2.2	3		79						66	64	61	59	56	50	44	35	26	18					
PV 8x8/4	3	4		105						88	85	82	78	74	66	S8	46	34	24					
PV 8x10/5.5	4	5.5		132						110	106	102	98	93	83	73	58	43	30					
PV 8x13/7.5	55	7.5		171						143	138	133	127	121	108	95	75	56	39					
PV 8x17/10	7.5	10		224						187	180	173	167	158	141	124	99	73	51					
PV 12x3/2	1.5	2		44								43	42	41	40	38	36	33	30	27	24	20	17	40x40
PV 12x4/3	22 I 3			59								58	57	55	S3	so	43	44	40	36	32	27	23	50x50
PV 12x5/4	3	4		73								72	71	69	66	63	60	55	SO	4S	40	34	29	
PV 12x7/5.5	4	55		102								101	99	97	92	88	84	77	70	63	56	48	40	
PV 12x9/7.5	55	7.5		132								130	127	124	119	113	108	99	90	81	71	61	51	
PV 12x11/10	75	10		161								159	155	152	145	138	131	121	110	的	87	7S	63	
PV 12x15/15	11	15		220								217	212	207	198	189	179	165	150	136	119	102	86	

MODEL *MODELO*	Power *Potencia*		us gpm	Q-DELIVERY / *CAUDAL*									DN
				0	26	53	79	10$	132	159	185	211	
			l/min	0	100	200	300	400	500	600	700	800	
	kw	hp	mVh	0	6	12	18	24	30	36	42	48	mm
PV 30xS/10	7.5	10		105	100	93	86	78	67	S4	36	4	50x50
PV 30x6/12	92	12.5	H(m)	126	120	112	103	94	80	65	44	5	65x65
PV 30x8/15	11	15		168	1S8	149	138	124	106	86	S3	6	80x80

MATERIAL DESCRIPTION / *DESCRIPCI6N DE MATERIAL*

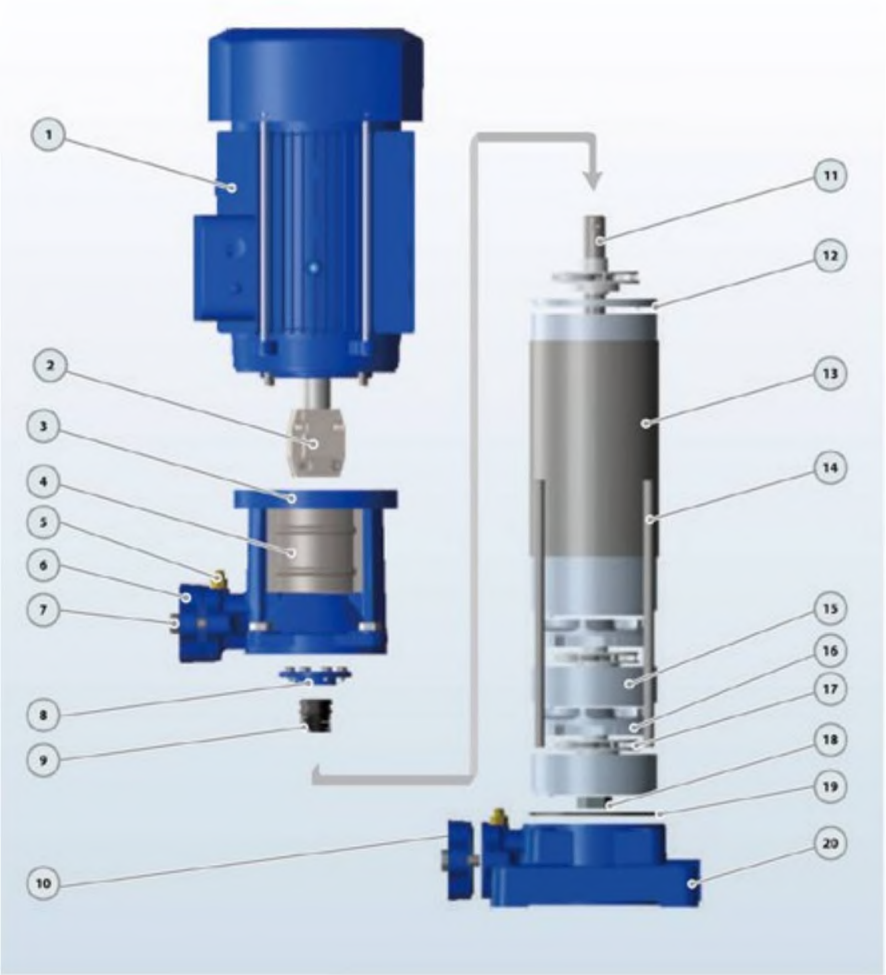

No.	Description *Descripcion*	Material *Material*
1	Motor *Motor*	IP55 Class F *IP5S Close F*
2	Coupfng Un/On	Iron *Hierro*
3	Discharge Body *Cuerpo tmpuisibfi*	Cast iron *Fundicion*
4	Cover *Tapa*	SS304 *的ox 304*
S	Release Vahre *Tap6n C&b&do*	Brass *Bronco*
b	Discharge *Impuisidn*	Cast iron *Fundtcion*
7	Bolt *P&rno*	Sted *Ac^ro*
8	Seal Cover Tapa Qerre	Cast iron *FundM^n*
9	Mechanical Soai *Cierre Mec^nico*	SiGCarbon/SS304 *SiC~Grafik>-Inox304*
10	Suction *Aspiracidn*	Cast iron *Fundici6r*
11	Pump Shaft *Eje*	SS304/45# Iren *Inox 304/45H hierro*
12	Diffuser Top Cover *Tope Tops Difusor*	Tecnncpolmer *Tecnopdimero*
13	Punp Cover *Tapa Bemba*	SS304 *Inox 304*
14	Through Bolt *Porno*	Steel *Aceio*
-	Dffuser Cover *Tapa Dfusof*	Technopofanefth SS3O4 mg *iGcmpobnsm con Inox anHo*
16	Dffuser *Difusor*	T0Chnopoimefw<hSS3O4rtr)g *Tecnopoltmero con Inox onifo*
17	impeler *Impulsor*	Techncpolmer *TecnopoHmero*
18	Impel er Nut *Tuefca de fmputsor*	Galvanizated Sleel *Aeon Gclvanizodo*
19	O-nn(j *Junta TMca*	Rubber *Caucho*
20	Sucbon Body *Cuerpo Asptnd&i*	Cast iron *Fundtcidn*

PERFORMANCE CURVE / *CURVAS DEFUNCIONAMIENTO*

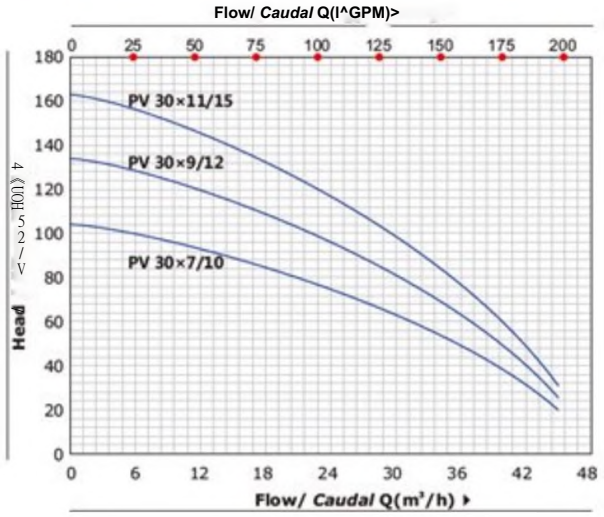

DIMENSIONS AND WEIGHT / *DIMENSIONS Y PESOS*

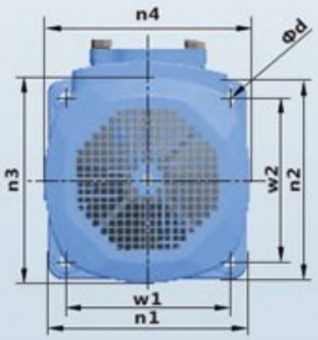

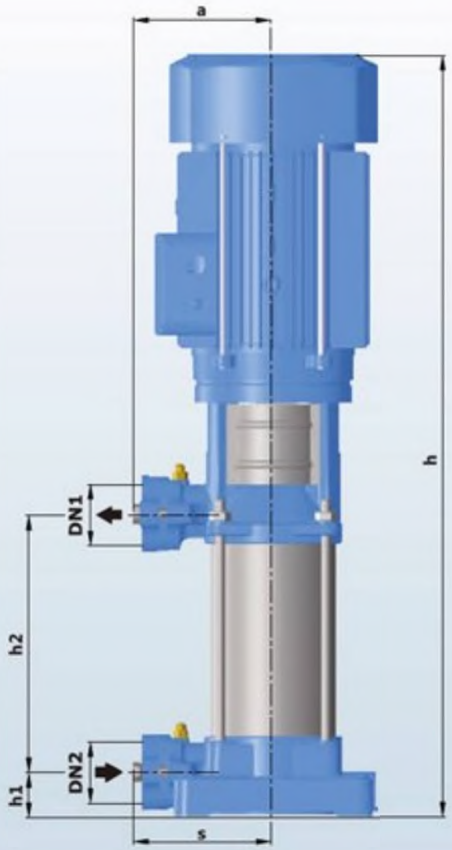

MODEL *MODELO*	DIMENSIONS / *DIMENSIONES* mm															kg	
	DN1	DN2	N	a	s	h	hi	h2	wl	w2	n1	n2	n3	n4	d	1-	3-
PV4x7/1.5	25/32	25/32	7	141	141	720	4S.S	261.5	165	16S	202	202	175	ns	12	28.0	27.0
PV 4x9/2	25/32	25/32	9	141	141	790	45.5	331.5	16S	165	202	202	175	175	12	33.0	32.0
PV 4x13/3	25/32	«/32	B	141	141	930	4S.S	471.5	16S	165	202	202	175	175	12	38.0	37.0
PV 4x16/4	25/32	25/32	16	141	141	1082	45.5	576.5	16S	165	202	202	195	19S	12	48.0	47.0
PV6x5/1.5	25/32	25/32	5	141	141	650	4S.S	191.S	165	165	202	202	175	175	12	26.0	2S.0
PV 6x8/2	25/32	25/32	8	141	141	755	45.5	296.5	16S	165	202	202	175	175	12	31.0	30.0
PV 6x11/3	25/32	25/32	11	141	141	860	45.5	401.5	165	165	202	202	175	175	12	36.0	35.0
PV 6x15/4	25/32	25/32	IS	141	141	1047	45.5	S41.5	16S	165	202	202	195	195	12	46.0	4S.0
PV8x4/1.5	40/50	40/50	4	141	141	615	4S.5	156.5	165	165	202	202	175	175	12	26.0	25.0
PV 8x7/2	40/50	40/50	7	141	141	720	45.5	261.5	16S	165	202	202	175	175	12	31.0	30.0
PV 8x9/3	40/50	40/50	9	141	141	790	4S.S	331.5	16S	16S	202	202	17S	17S	12	36.0	3S.0
PV 8x12/4	40/50	40/50	12	141	141	942	45.5	436.5	165	16S	202	202	195	195	12	46.0	4S.0
PV 8x16/5.5	40/50	40/50	16	141	141	1082	45.S	576.5	165	165	202	202	195	195	12	-	50.0
PV 12x3/L5	40/50	40/50	3	141	141	580	45.5	121.5	165	16S	202	202	175	175	12	25.0	24.0
PV 12x5/2	40/50	40/50	5	141	141	650	45.S	191.S	165	16S	202	202	175	17S	12	30.0	29.0
PV 12x7/3	40/50	40/50	7	141	141	720	45.5	261.5	165	16S	202	202	175	175	12	35.0	34.0
PV 12x9/4	40/50	40/50	9	141	141	837	45.5	331.5	165	165	202	202	195	195	12	45.0	44.0
PV 12x12/5.5	40/50	40/50	12	141	141	942	45.5	4J6.5	165	16S	202	202	195	195	12	-	50.0
PV 12x17/7.5	40/50	40/50	17	141	141	1167	45.5	611.5	16S	16S	202	202	204	204	12	-	60.0
PV 30x7/10	50/65	50/65	7	170	170	1046	62	416	187	187	230	230	260	260	12	-	86.0
PV 30x9/12	50/65	50/65	9	170	170	11S3	62	523	187	187	230	230	260	260	12	-	92.0
PV 30xII/IS	50/65	50/65	n	170	170	1260	62	630	187	187	230	230	260	260	12	-	100

Multistage Jockey Pumps PV

[PV] High Pressure Vertical Multistage Centrifugal Pump

TECHNICAL DESCRIPTION

- New vertical multistage centrifugal pump

-Original design by PURITY

- Both square motor & round motor available
- YE3 high efficient motor, with protection IP55 class F

-Pump case with anti-corrosive coating

- Impeller in techno-polimer
- Shaft in stainless steel AISI 304 or galvanized iron
- Suction and discharge port in cast iron G20 thread
- Quality NSK bearing, wear resistance mechanical seal

Product Specification (50HZ)

Product Description

TECHNICAL DESCRIPTION
New vertical multistage centrifugal pump
Original design by PURITY
Both square motor & round motor available
YE3 high efficient motor, with protection IP55 class F
Pump case with anti-corrosive coating
Impeller in techno-polimer
Shaft in stainless steel AISI 304 or galvanized iron
Suction and discharge port in cast iron G20 thread
Quality NSK bearing, wear resistance mechanical seal

APPLICATIONS
Suitable for use with clean water and liquids that are not chemically aggressive towards the materials from which the pump is made.
The high efficiency and adaptability of these pumps to even the most unusual of applications, makes them ideal for use in the domestic, civil and industrial sectors; in particular for the distribution of water in combination with pressure sets and for pressure boosting.

USING LIMITS
Liquid temperature between -10°C and +120°C
Ambient temperature up to +50°C
Max. working pressure 25 bar

Continuous service SI

TECHNICAL DATA / *DATOS TiCNICOS* **50 Hz n=29001 /min**

MODEL *MODELO*	Power *Potencia*		us gpm	(^DELIVERY / *CAUDAL*																				DN
				0	5	11	13	16	19	21	24	26	29	32	37	42	48	53	58	63	69	74	79	
			Wmin	0	20	40	50	60	70	80	90	100	110	120	140	160	180	200	220	240	260	280	300	
	kw	hp	m^h	0	1«2	2-4	3	3.6	4.2	4.8	5.4	6	6.6	7.2	8.4	9.6	10.8	12	13.2	14.4	15.6	16.8	18	mm
PV4x7/1.5	1.1	1.5		60.7	56.8	52.1	49	45.9	42.8	38.9	35	30.3	25.7	20.2										25x25
PV 4x9/2	1.5	2		78	73	67	63	59	55	50	45	39	33	26										25x25
PV 4x13/3	2.2	3		113	IOS	96.8	91	85-2	79.4	72.2	6S	56.3	47.7	37.5										25x25
PV 4x16/4	3	4		139	130	119	112	105	97.8	88.9	80	69.3	58.7	46.2										25x25
PV 6* 5/1.5	1.1	1.5		44.4				1355	33.3	30.9	28.4	26.1	23.4	20.2	14.3	6.8								32x32
PV 6x8/2	1.5	2		71.1				56.7	53.2	49.5	45.5	41.8	37.5	32.4	22.9	10.9								32x32
PV 6x11/3	2.2	3		97.7				78	73.2	68	62.5	57.5	51.5	44.5	31.5	IS								32x32
PV 6x15/4	3	4		133				106	99.8	92.7	85.2	78.4	70.2	60.7	43	20.5								32x32
PV8x4/1.5	1.1	1.5		36.8						30	28.4	27.2	26	24.4	21.2	17.6	132	9.2	4.8					40x40
PV 8x7/2	1.5	2	H(m)	64.4						52.5	49.7	47.6	45.5	42.7	37.1	30.8	23.1	16.1	8.4					40x40
PV 8x9/3	2.2	3		82.8						67.5	63.9	61.2	58.5	54.9	47.7	39.6	29.7	20.7	10.8					40x40
PV 8x12/4	3	4		110						90	85.2	81.6	78	73.2	63.6	52.8	39J6	27.6	14.4					40x40
PV 8x16/5.5	4	5.5		147						120	114	109	104	97.6	84.8	70.4	523	36.8	19.2					40x40
PV 12x3/1.5	1.1	1.5		31								25.4	24.7	24	22.4	20.6	18.4	16.2	13.3	10.9	8.3	5.1	2	50x50
PV 12x5/2	1.5	2		517								42.4	41.2	40	37.3	34.3	307	27	22.2	18.2	13.8	8.5	3.3	50x50
PV 12x7/3	2.2	3		72.3								593	57.6	56	523	48.1	43	37.8	31	25.5	19.4	11.9	4.7	50x50
PV 12x9/4	3	4		93								76.2	74.1	72	67.2	61.8	S52	48.6	39.9	32.8	24.9	15.4	6	50x50
PV 12x12/5.5	4	5.5		122								102	98.8	96	89.6	82.4	73^	64.8	512	43.8	33.2	20.5	8	50x50
PV 12x17/75	5.5	7.5		176								144	140	136	127	117	104	91.8	75.4	62	47	29	11.3	50xS0

MODEL *MODELO*	Power *Potencia*		us gpm	Q= DE LIVE RY / *CAUDAL*									DN
				0	26	53	79	106	132	159	185	211	
			t/min	0	100	200	300	400	500	600	700	800	
	kw	hp	m³/h	0	6	12	18	24	30	36	42	48	mm
PV 30x7/10	7.5	10		104	100	93	83	74	64	49	31	4	50x50
PV 30x9/12	9.2	12.5	H(m)	133	128	119	108	%	82	63	40	5	
PV 30x11/15	11	15		163	156	145	132	116	99	77	48	6	65x65

PERFORMANCE CURVE / *CURVAS DEFUNCIONAMIENTO*

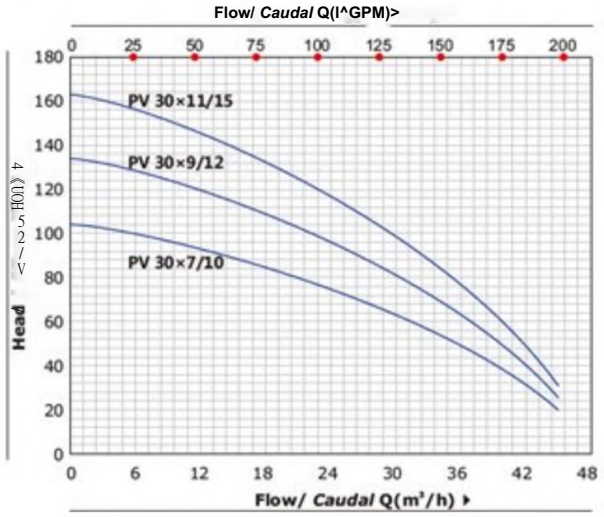

DIMENSIONS AND WEIGHT / *DIMENSIONS Y PESOS*

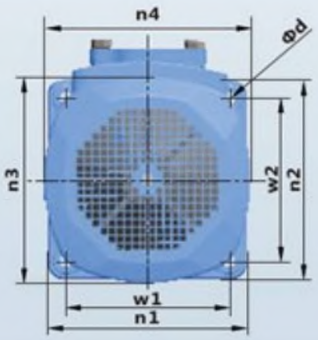

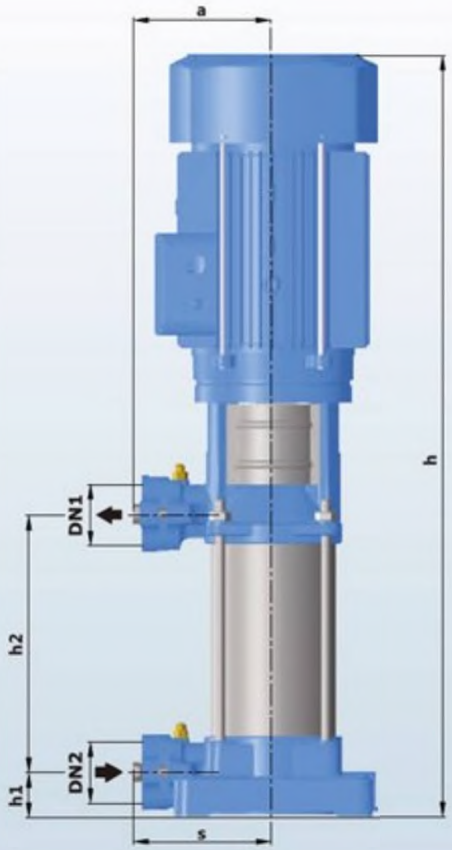

MODEL *MODELO*	DIMENSIONS / *DIMENSIONES* mm															kg	
	DN1	DN2	N	a	s	h	hi	h2	wl	w2	n1	n2	n3	n4	d	1-	3-
PV4x7/1.5	25/32	25/32	7	141	141	720	4S.S	261.5	165	16S	202	202	175	ns	12	28.0	27.0
PV 4x9/2	25/32	25/32	9	141	141	790	45.5	331.5	16S	165	202	202	175	175	12	33.0	32.0
PV 4x13/3	25/32	«/32	B	141	141	930	4S.S	471.5	16S	165	202	202	175	175	12	38.0	37.0
PV 4x16/4	25/32	25/32	16	141	141	1082	45.5	576.5	16S	165	202	202	195	19S	12	48.0	47.0
PV6x5/1.5	25/32	25/32	5	141	141	650	4S.S	191.S	165	165	202	202	175	175	12	26.0	2S.0
PV 6x8/2	25/32	25/32	8	141	141	755	45.5	296.5	16S	165	202	202	175	175	12	31.0	30.0
PV 6x11/3	25/32	25/32	11	141	141	860	45.5	401.5	165	165	202	202	175	175	12	36.0	35.0
PV 6x15/4	25/32	25/32	IS	141	141	1047	45.5	S41.5	16S	165	202	202	195	195	12	46.0	4S.0
PV8x4/1.5	40/50	40/50	4	141	141	615	4S.5	156.5	165	165	202	202	175	175	12	26.0	25.0
PV 8x7/2	40/50	40/50	7	141	141	720	45.5	261.5	16S	165	202	202	175	175	12	31.0	30.0
PV 8x9/3	40/50	40/50	9	141	141	790	4S.S	331.5	16S	16S	202	202	17S	17S	12	36.0	3S.0
PV 8x12/4	40/50	40/50	12	141	141	942	45.5	436.5	165	16S	202	202	195	195	12	46.0	4S.0
PV 8x16/5.5	40/50	40/50	16	141	141	1082	45.S	576.5	165	165	202	202	195	195	12	-	50.0
PV 12x3/L5	40/50	40/50	3	141	141	580	45.5	121.5	165	16S	202	202	175	175	12	25.0	24.0
PV 12x5/2	40/50	40/50	5	141	141	650	45.S	191.S	165	16S	202	202	175	17S	12	30.0	29.0
PV 12x7/3	40/50	40/50	7	141	141	720	45.5	261.5	165	16S	202	202	175	175	12	35.0	34.0
PV 12x9/4	40/50	40/50	9	141	141	837	45.5	331.5	165	165	202	202	195	195	12	45.0	44.0
PV 12x12/5.5	40/50	40/50	12	141	141	942	45.5	4J6.5	165	16S	202	202	195	195	12	-	50.0
PV 12x17/7.5	40/50	40/50	17	141	141	1167	45.5	611.5	16S	16S	202	202	204	204	12	-	60.0
PV 30x7/10	50/65	50/65	7	170	170	1046	62	416	187	187	230	230	260	260	12	-	86.0
PV 30x9/12	50/65	50/65	9	170	170	11S3	62	523	187	187	230	230	260	260	12	-	92.0
PV 30xII/IS	50/65	50/65	n	170	170	1260	62	630	187	187	230	230	260	260	12	-	100

Product Specification (60HZ)

Product Description

TECHNICAL DESCRIPTION
New vertical multistage centrifugal pump
Original design by PURITY
Both square motor & round motor available
YE3 high efficient motor, with protection IP55 class F
Pump case with anti-corrosive coating
Impeller in techno-polimer
Shaft in stainless steel AISI 304 or galvanized iron
Suction and discharge port in cast iron G20 thread
Quality NSK bearing, wear resistance mechanical seal

APPLICATIONS
Suitable for use with clean water and liquids that are not chemically aggressive towards the materials from which the pump is made.
The high efficiency and adaptability of these pumps to even the most unusual of applications, makes them ideal for use in the domestic, civil and industrial sectors; in particular for the distribution of water in combination with pressure sets and for pressure boosting.

USING LIMITS
Liquid temperature between -10°C and +120°C
Ambient temperature up to +50°C
Max. working pressure 25 bar

Continuous service SI

TECHNICAL DATA / *DATOS TiCNICOS* **60 Hz n=34501/min**

MODEL *MODELO*	Power *Potencia*		us 卯m	^DELIVERY / *CAUDAL*																				DN
				0	5	11	13	16	19	21	24	26	29	32	37	42	48	53	58	63	69	74	79	
			l/min	0	20	40	50	60	70	80	90	100	110	120	140	160	180	200	220	240	260	280	300	
	kw hp		rr^/h	0	1.2	2.4	3	3.6	4.2	4.8	5.4	6	6.6	72	8.4	9.6	10.8	12	112	14.4	15.6	16.8	18	mm
PV 4x4/15	TI~L5~			52	49	46	44	41	39	37	33	30	27	23										
PV 4x6/2	IS 2			77	74	69	66	63	S8	55	50	45	40	34										
PV 4x8/3	22	3		104	99	92	88	84	78	73	66	60	S3	4S										
PV 4x10/4	3	IT*		129	124	116	no	104	97	91	83	75	66	57										
PV 4x13/5.5	4	5.5		168	161	150	143	B6	126	119	108	97	86	74										
PV 4x16/7.5	55	7.5		206	198	185	177	167	156	146	133	119	106	91										2Sx2S
PV 6x3/1.5	1.1	1.5		40				36	35	33	31	30	28	26	22	17								32x32
PV 6x5/2	1.5	2		66				60	58	5S	52	50	47	43	36	28								
PV 6x7/3	la ZE			92				8S	81	78	73	70	66	61	51	40								
PV 6x9/4	3	4		119				109	104	100	94	90	84	78	65	51								
PV 6x12/5.5	4	55		159				145	139	133	125	120	113	104	87	68								
PV 6x16/7.5	5.5	7.5		197				180	173	165	1S6	150	140	130	108	85								
PV 8x4/2	IS 2		H(m)	53						44	42	41	39	37	33	29	23	17	12					
PV 8x6/3	2.2	3		79						66	64	61	59	56	50	44	35	26	18					
PV 8x8/4	3	4		105						88	85	82	78	74	66	S8	46	34	24					
PV 8x10/5.5	4	5.5		132						110	106	102	98	93	83	73	58	43	30					
PV 8x13/7.5	55	7.5		171						143	138	133	127	121	108	95	75	56	39					
PV 8x17/10	7.5	10		224						187	180	173	167	158	141	124	99	73	51					
PV 12x3/2	1.5	2		44								43	42	41	40	38	36	33	30	27	24	20	17	40x40
PV 12x4/3	22 I 3			59								58	57	55	S3	so	43	44	40	36	32	27	23	50x50
PV 12x5/4	3	4		73								72	71	69	66	63	60	55	SO	4S	40	34	29	
PV 12x7/5.5	4	55		102								101	99	97	92	88	84	77	70	63	56	48	40	
PV 12x9/7.5	55	7.5		132								130	127	124	119	113	108	99	90	81	71	61	51	
PV 12x11/10	75	10		161								159	155	152	145	138	131	121	110	的	87	7S	63	
PV 12x15/15	11	15		220								217	212	207	198	189	179	165	150	136	119	102	86	

MODEL *MODELO*	Power *Potencia*		us gpm	Q-DELIVERY / *CAUDAL*									DN
				0	26	53	79	10$	132	159	185	211	
			l/min	0	100	200	300	400	500	600	700	800	
	kw	hp	mVh	0	6	12	18	24	30	36	42	48	mm
PV 30xS/10	7.5	10		105	100	93	86	78	67	S4	36	4	50x50
PV 30x6/12	92	12.5	H(m)	126	120	112	103	94	80	65	44	5	65x65
PV 30x8/15	11	15		168	1S8	149	138	124	106	86	S3	6	80x80

MATERIAL DESCRIPTION / *DESCRIPCI6N DE MATERIAL*

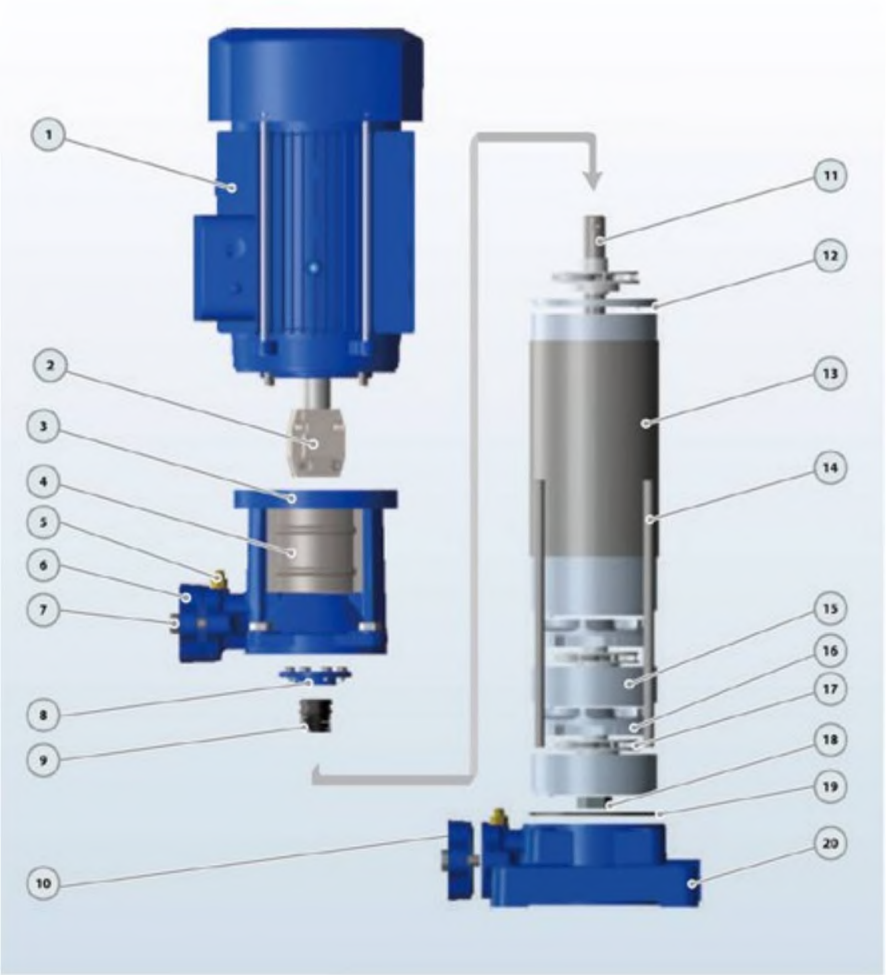

No.	Description *Descripcion*	Material *Material*
1	Motor *Motor*	IP55 Class F *IP5S Close F*
2	Coupfng Un/On	Iron *Hierro*
3	Discharge Body *Cuerpo tmpuisibfi*	Cast iron *Fundicion*
4	Cover *Tapa*	SS304 *的ox 304*
S	Release Vahre *Tap6n C&b&do*	Brass *Bronco*
b	Discharge *Impuisidn*	Cast iron *Fundtcion*
7	Bolt *P&rno*	Sted *Ac^ro*
8	Seal Cover Tapa Qerre	Cast iron *FundM^n*
9	Mechanical Soai *Cierre Mec^nico*	SiGCarbon/SS304 *SiC~Grafik>-Inox304*
10	Suction *Aspiracidn*	Cast iron *Fundici6r*
11	Pump Shaft *Eje*	SS304/45# Iren *Inox 304/45H hierro*
12	Diffuser Top Cover *Tope Tops Difusor*	Tecnncpolmer *Tecnopdimero*
13	Punp Cover *Tapa Bemba*	SS304 *Inox 304*
14	Through Bolt *Porno*	Steel *Aceio*
-	Dffuser Cover *Tapa Dfusof*	Technopofanefth SS3O4 mg *iGcmpobnsm con Inox anHo*
16	Dffuser *Difusor*	T0Chnopoimefw<hSS3O4rtr)g *Tecnopoltmero con Inox onifo*
17	impeler *Impulsor*	Techncpolmer *TecnopoHmero*
18	Impel er Nut *Tuefca de fmputsor*	Galvanizated Sleel *Aeon Gclvanizodo*
19	O-nn(j *Junta TMca*	Rubber *Caucho*
20	Sucbon Body *Cuerpo Asptnd&i*	Cast iron *Fundtcidn*

PERFORMANCE CURVE / *CURVAS DEFUNCIONAMIENTO*

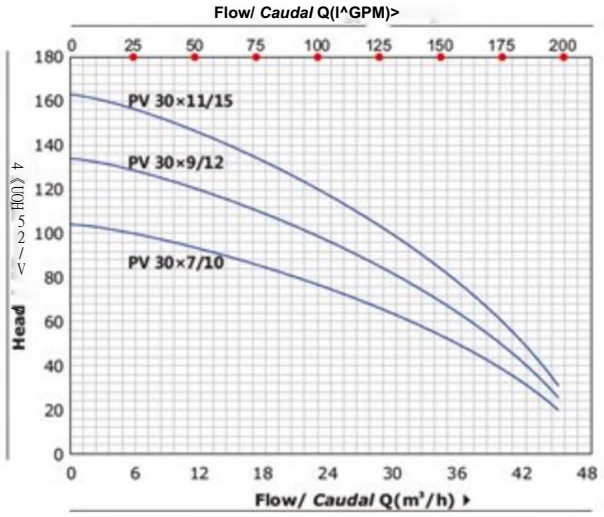

DIMENSIONS AND WEIGHT / *DIMENSIONS Y PESOS*

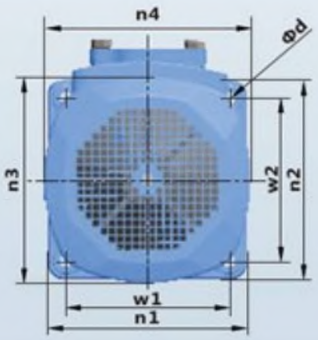

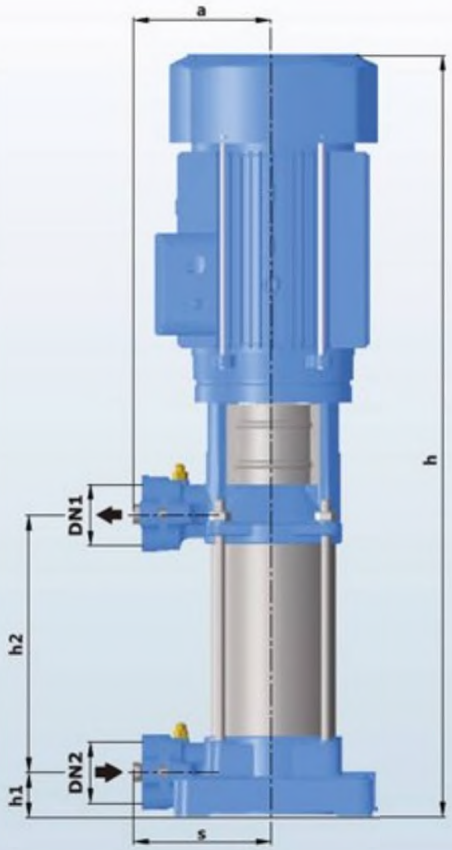

MODEL *MODELO*	DIMENSIONS / *DIMENSIONES* mm															kg	
	DN1	DN2	N	a	s	h	hi	h2	wl	w2	n1	n2	n3	n4	d	1-	3-
PV4x7/1.5	25/32	25/32	7	141	141	720	4S.S	261.5	165	16S	202	202	175	ns	12	28.0	27.0
PV 4x9/2	25/32	25/32	9	141	141	790	45.5	331.5	16S	165	202	202	175	175	12	33.0	32.0
PV 4x13/3	25/32	«/32	B	141	141	930	4S.S	471.5	16S	165	202	202	175	175	12	38.0	37.0
PV 4x16/4	25/32	25/32	16	141	141	1082	45.5	576.5	16S	165	202	202	195	19S	12	48.0	47.0
PV6x5/1.5	25/32	25/32	5	141	141	650	4S.S	191.S	165	165	202	202	175	175	12	26.0	2S.0
PV 6x8/2	25/32	25/32	8	141	141	755	45.5	296.5	16S	165	202	202	175	175	12	31.0	30.0
PV 6x11/3	25/32	25/32	11	141	141	860	45.5	401.5	165	165	202	202	175	175	12	36.0	35.0
PV 6x15/4	25/32	25/32	IS	141	141	1047	45.5	S41.5	16S	165	202	202	195	195	12	46.0	4S.0
PV8x4/1.5	40/50	40/50	4	141	141	615	4S.5	156.5	165	165	202	202	175	175	12	26.0	25.0
PV 8x7/2	40/50	40/50	7	141	141	720	45.5	261.5	16S	165	202	202	175	175	12	31.0	30.0
PV 8x9/3	40/50	40/50	9	141	141	790	4S.S	331.5	16S	16S	202	202	17S	17S	12	36.0	3S.0
PV 8x12/4	40/50	40/50	12	141	141	942	45.5	436.5	165	16S	202	202	195	195	12	46.0	4S.0
PV 8x16/5.5	40/50	40/50	16	141	141	1082	45.S	576.5	165	165	202	202	195	195	12	-	50.0
PV 12x3/L5	40/50	40/50	3	141	141	580	45.5	121.5	165	16S	202	202	175	175	12	25.0	24.0
PV 12x5/2	40/50	40/50	5	141	141	650	45.S	191.S	165	16S	202	202	175	17S	12	30.0	29.0
PV 12x7/3	40/50	40/50	7	141	141	720	45.5	261.5	165	16S	202	202	175	175	12	35.0	34.0
PV 12x9/4	40/50	40/50	9	141	141	837	45.5	331.5	165	165	202	202	195	195	12	45.0	44.0
PV 12x12/5.5	40/50	40/50	12	141	141	942	45.5	4J6.5	165	16S	202	202	195	195	12	-	50.0
PV 12x17/7.5	40/50	40/50	17	141	141	1167	45.5	611.5	16S	16S	202	202	204	204	12	-	60.0
PV 30x7/10	50/65	50/65	7	170	170	1046	62	416	187	187	230	230	260	260	12	-	86.0
PV 30x9/12	50/65	50/65	9	170	170	11S3	62	523	187	187	230	230	260	260	12	-	92.0
PV 30xII/IS	50/65	50/65	n	170	170	1260	62	630	187	187	230	230	260	260	12	-	100

Multistage Jockey Pumps PVT/PVS

S.S.304 vertical multistage pump Bomba de etapas múltiples inox304 Pompe multicellulaire verticale i

TECHNICAL DESCRIPTION

- SS304 vertical, multistage centrifugal pump
- The suction and discharge ports on the same level
- PVT pump head and base are in cast iron
- PVT pump impeller and shaft are in stainless steel

-PVS pump all wetted parts are in stainless steel

- YE3 high efficient motor, with protection IP55 class F
- Quality bearing, wear resistance mechanical seal
- Liquid temperature between -10°C and +120°C

PVT PVS

Home Civil Industry Fire

PVT/PVS

S.S.304 vertical multistage pump
Bomba de etapas múltiples inox304
Pompe multicellulaire verticale inox304

TECHNICAL DESCRIPTION

■ SS304 vertical, multistage centrifugal pump
■ The suction and discharge ports on the same level
• PVT pump head and base are in cast iron
• PVT pump impeller and shaft are in stainless steel
■ PVS pump all wetted parts are in stainless steel
-YE3 high efficient motor, with protection IP55 class F
• Quality bearing, wear resistance mechanical seal
■ Liquid temperature between -10°C and +120°C

APPLICATIONS

• The stainless steel multistage pumps are suitable for industrial processing systems,washing and cleaning systems,pumping of acids and alkalis, filtration systems,water pressure boosting,water Treatment,HVAC,irrigation, fire protection systems etc.

USING LIMITS

For example/Por *ejemplo/Par exemple*

PVT(S) 32 - 30-2

I

I2=Small impeller number

Número de impulsor pequeho

Numéro de roue petit

30=Stage/Etapa/Étape x10 (PVT32-PVT90)

Stage/Etapa/Étapexl (PVT1-PVT20)

L 32=Rated flow(m^3/h)

Caudal nominal (m^3/h)

Débit nominal(m^3/h)

PVT=Common type vertical multistage pump

Tipo común bomba vertical de etapas multiples

Pompe multicellulaire verticale de type commun

PVS=Pump with flow passage components in SS304

Bomba con componentes de paso de flujo en inox304

Pompe avec compos ants de passage d'ecoulement en inox304

TECHNICAL *DKTMDATOS TECNICOS/DONNEES TECHNIQUES* **50 Hz n=29001/min**

MODEL *MODELO* *MODULE*	DN mm	Power *Potencia* *Puissance* kw	np	US gpm.8 / l/min 7 / m³/h0.4	2.6	3.5	4.4	5.3	6.2	7	7.9	8.8	10.6	12.3	13.2	14.1	15.4	15.9	17.6
				Q=DELIVERY/CAUDAL/DtBIT															
				10	13	17	20	23	27	30	33	40	47	50	53	58	60	67	
				0.6	0.8	1	1.2	1.4	1.6	1.8	2	2.4	2.8	3	3.2	3.5	3.6	4	
				H=Head/Altura/Hauteur(m)															
PVT 1-2	25x25	0.37	0.5	13	12.5	12	11.5	11	10.5	10	9.5	9	-	-	-	-	-	-	-
PVT 1-3	25x25	0.37	0.5	19	18	17.5	17	16.5	16	15	14	12	-	-	-	-	-	-	-
PVT 1-4	25x25	0.37	0.5	24	23.5	23	22.5	21.5	21	19	18	16	-	-	-	-	-	-	-
PVT 1-5	25x25	0.37	0.5	30	29.6	29	28	27	26	24	22	20	-	-	-	-	-	-	-
PVT 1-6	25x25	0.37	0.5	36	35.5	35	33.5	33	31	28	26	23	-	-	-	-	-	-	-
PVT 1-7	25x25	0.37	0.5	42	41	40.5	39	38	36	33	30	27	-	-	-	-	-	-	-
PVT 1-8	25x25	0.55	0.75	48	47	46	45	43	41	38	34	30	-	-	-	-	-	-	-
PVT 1-9	25x25	0.55	0.75	54	53	52	51	49	46	43	39	33	-	-	-	-	-	-	-
PVT 1-10	25x25	0.55	0.75	60	59	58	57	54	51	48	43	36	-	-	-	-	-	-	-
PVT 1-11	25x25	0.55	0.75	66	65	63	61	59	56	52	47	40	-	-	-	-	-	-	-
PVT 1-12	25x25	0.75	1	72	71	69	67	64	61	57	51	44	-	-	-	-	-	-	-
PVT 1-13	25x25	0.75	1	78	77	75	73	69	66	62	55	47	-	-	-	-	-	-	-
PVT 1-15	25x25	0.75	1	89	88	86	84	79	76	71	63	55	-	-	-	-	-	-	-
PVT 1-17	25x25	1.1	1.5	101	99	97	95	89	86	80	71	62	-	-	-	-	-	-	-
PVT 1-19	25x25	1.1	1.5	113	110	108	106	99	96	89	79	69	-	-	-	-	-	-	-
PVT 1-21	25x25	1.1	1.5	124	122	120	117	110	106	98	87	75	-	-	-	-	-	-	-
PVT 1-23	25x25	1.1	1.5	137	133	131	128	121	116	107	96	82	-	-	-	-	-	-	-
PVT 1-25	25x25	1.5	2	149	145	143	139	131	126	116	104	89	-	-	-	-	-	-	-
PVT 1-27	25x25	1.5	2	161	157	155	150	141	136	125	112	95	-	-	-	-	-	-	-
PVT 1-30	25x25	1.5	2	178	175	171	166	157	150	139	124	106	-	-	-	-	-	-	-
PVT 1-33	25x25	2.2	3	196	192	188	183	173	165	154	137	118	-	-	-	-	-	-	-
PVT 1-36	25x25	2.2	3	214	210	205	200	190	181	169	151	130	-	-	-	-	-	-	-
PVT 2-2	25x25	0.37	0.5	-	-	-	18	17	17	16	16	15	13	12	11	10	8	-	-
PVT 2-3	25x25	0.37	0.5	-	-	-	27	26	25	24	23	22	20	18	17	15	12	-	-
PVT 2-4	25x25	0.55	0.75	-	-	-	36	35	34	33	32	30	26	24	22	20	16	-	-
PVT 2-5	25x25	0.55	0.75	-	-	-	45	43	42	40	39	37	33	30	27	24	20	-	-
PVT 2-6	25x25	0.75	1	-	-	-	53	52	51	50	48	45	40	36	33	30	24	-	-
PVT 2-7	25x25	0.75	1	-	-	-	63	61	59	57	55	52	47	41	38	35	28	-	-
PVT 2-9	25x25	1.1	1.5	-	-	-	80	78	76	73	70	67	61	54	50	45	37	-	-
PVT 2-11	25x25	1.1	1.5	-	-	-	98	95	92	89	86	82	73	64	59	54	44	-	-
PVT 2-13	25x25	1.5	2	-	-	-	116	114	110	106	102	98	89	78	72	65	52	-	-
PVT 2-15	25x25	1.5	2	-	-	-	134	130	127	123	118	112	100	90	82	73	60	-	-
PVT 2-18	25x25	22	3	-	-	-	161	157	153	148	142	136	121	108	100	91	76	-	-
PVT 2-22	25x25	2.2	3	-	-	-	197	192	186	180	173	165	148	130	120	110	90	-	-
PVT 2-26	25x25	3	4	-	-	-	232	228	221	214	206	198	179	158	144	130	110	-	-
PVT 3-2	25x25	0.37	0.5	-	-	-	-	12.5	12	11.5	11	11	10.5	10	9	8	7	7	6
PVT 3-3	25x25	0.37	0.5	-	-	-	-	19	19	18.5	18	17.5	16.5	15	14	13	12	11	9
PVT 3-4	25x25	0.37	0.5	-	-	-	-	25	25	24	24	23	21.5	20	19	18	16	15	12
PVT 3-5	25x25	0.37	0.5	-	-	-	-	31	31	30	30	29	27	25	23	22	20	19	16
PVT 3-6	25x25	0.55	0.75	-	-	-	-	36	36	35	35	34	32	30	28	27	24	23	19
PVT 3-7	25x25	0.55	0.75	-	-	-	-	43	42	41	40	39	37	34	32	31	28	27	22
PVT 3-8	25x25	0.75	1	-	-	-	-	49	48	47	46	45	43	39	37	35	32	31	25
PVT 3-9	25x25	0.75	1	-	-	-	-	55	54	53	52	51	48	45	42	40	36	35	28
PVT 3-10	25x25	0.75	1	-	-	-	-	61	60	59	58	57	54	50	47	45	41	39	31
PVT 3-11	25x25	1.1	1.5	-	-	-	-	67	66	64	63	61	58	54	51	49	44	42	34
PVT 3-12	25x25	1.1	1.5	-	-	-	-	73	72	70	69	67	63	58	55	52	47	45	37
PVT 3-13	25x25	1.1	1.5	-	-	-	-	78	77	76	75	73	69	64	60	57	51	49	40
PVT 3-15	25x25	1.1	1.5	-	-	-	-	90	89	88	86	84	79	73	69	66	59	57	46
PVT 3-17	25x25	1.5	2	-	-	-	-	103	102	100	98	96	90	83	79	75	67	64	52
PVT 3-19	25x25	1.5	2	-	-	-	-	115	114	112	110	107	100	92	88	83	75	72	58
PVT 3-21	25x25	2.2	3	-	-	-	-	128	126	124	122	119	112	102	98	91	82	79	64
PVT 3-23	25x25	2.2	3	-	-	-	-	140	138	135	133	130	122	112	107	100	90	86	70
PVT 3-25	25x25	2.2	3	-	-	-	-	151	149	147	144	141	131	122	116	109	98	94	76
PVT 3-27	25x25	2.2	3	-	-	-	-	164	162	159	156	152	143	132	124	117	105	101	82
PVT 3-29	25x25	2.2	3	-	-	-	-	175	173	170	167	163	153	142	133	126	113	109	88
PVT 3-31	25x25	3	4	-	-	-	-	187	185	182	179	175	165	153	142	135	121	116	94
PVT 3-33	25x25	3	4	-	-	-	-	199	197	194	191	187	176	163	151	145	130	125	100
PVT 3-36	25x25	3	4	-	-	-	-	218	215	212	208	204	192	178	168	159	143	137	109

PVS also a vai la bl e/tamb/^n *disponible/aussi disponible*

Performance curve in *page/Curva en pdgina/Courbe en page* 179-181

TECHNICAL *DKTMDATOS TECNICOS/DONNEES TECHNIQUES* **50 Hz n=29001/min**

MODEL *MODELO* *MODULE*	DN mm	Power *Potencia* *Puissance* kw	np	US gpm.8 / l/min 7 / m³/h0.4	2.6	3.5	4.4	5.3	6.2	7	7.9	8.8	10.6	12.3	13.2	14.1	15.4	15.9	17.6
				Q=DELIVERY/CAUDAL/DtBIT															
				10	13	17	20	23	27	30	33	40	47	50	53	58	60	67	
				0.6	0.8	1	1.2	1.4	1.6	1.8	2	2.4	2.8	3	3.2	3.5	3.6	4	
				H=Head/Altura/Hauteur(m)															
PVT 1-2	25x25	0.37	0.5	13	12.5	12	11.5	11	10.5	10	9.5	9	-	-	-	-	-	-	-
PVT 1-3	25x25	0.37	0.5	19	18	17.5	17	16.5	16	15	14	12	-	-	-	-	-	-	-
PVT 1-4	25x25	0.37	0.5	24	23.5	23	22.5	21.5	21	19	18	16	-	-	-	-	-	-	-
PVT 1-5	25x25	0.37	0.5	30	29.6	29	28	27	26	24	22	20	-	-	-	-	-	-	-
PVT 1-6	25x25	0.37	0.5	36	35.5	35	33.5	33	31	28	26	23	-	-	-	-	-	-	-
PVT 1-7	25x25	0.37	0.5	42	41	40.5	39	38	36	33	30	27	-	-	-	-	-	-	-
PVT 1-8	25x25	0.55	0.75	48	47	46	45	43	41	38	34	30	-	-	-	-	-	-	-
PVT 1-9	25x25	0.55	0.75	54	53	52	51	49	46	43	39	33	-	-	-	-	-	-	-
PVT 1-10	25x25	0.55	0.75	60	59	58	57	54	51	48	43	36	-	-	-	-	-	-	-
PVT 1-11	25x25	0.55	0.75	66	65	63	61	59	56	52	47	40	-	-	-	-	-	-	-
PVT 1-12	25x25	0.75	1	72	71	69	67	64	61	57	51	44	-	-	-	-	-	-	-
PVT 1-13	25x25	0.75	1	78	77	75	73	69	66	62	55	47	-	-	-	-	-	-	-
PVT 1-15	25x25	0.75	1	89	88	86	84	79	76	71	63	55	-	-	-	-	-	-	-
PVT 1-17	25x25	1.1	1.5	101	99	97	95	89	86	80	71	62	-	-	-	-	-	-	-
PVT 1-19	25x25	1.1	1.5	113	110	108	106	99	96	89	79	69	-	-	-	-	-	-	-
PVT 1-21	25x25	1.1	1.5	124	122	120	117	110	106	98	87	75	-	-	-	-	-	-	-
PVT 1-23	25x25	1.1	1.5	137	133	131	128	121	116	107	96	82	-	-	-	-	-	-	-
PVT 1-25	25x25	1.5	2	149	145	143	139	131	126	116	104	89	-	-	-	-	-	-	-
PVT 1-27	25x25	1.5	2	161	157	155	150	141	136	125	112	95	-	-	-	-	-	-	-
PVT 1-30	25x25	1.5	2	178	175	171	166	157	150	139	124	106	-	-	-	-	-	-	-
PVT 1-33	25x25	2.2	3	196	192	188	183	173	165	154	137	118	-	-	-	-	-	-	-
PVT 1-36	25x25	2.2	3	214	210	205	200	190	181	169	151	130	-	-	-	-	-	-	-
PVT 2-2	25x25	0.37	0.5	-	-	-	18	17	17	16	16	15	13	12	11	10	8	-	-
PVT 2-3	25x25	0.37	0.5	-	-	-	27	26	25	24	23	22	20	18	17	15	12	-	-
PVT 2-4	25x25	0.55	0.75	-	-	-	36	35	34	33	32	30	26	24	22	20	16	-	-
PVT 2-5	25x25	0.55	0.75	-	-	-	45	43	42	40	39	37	33	30	27	24	20	-	-
PVT 2-6	25x25	0.75	1	-	-	-	53	52	51	50	48	45	40	36	33	30	24	-	-
PVT 2-7	25x25	0.75	1	-	-	-	63	61	59	57	55	52	47	41	38	35	28	-	-
PVT 2-9	25x25	1.1	1.5	-	-	-	80	78	76	73	70	67	61	54	50	45	37	-	-
PVT 2-11	25x25	1.1	1.5	-	-	-	98	95	92	89	86	82	73	64	59	54	44	-	-
PVT 2-13	25x25	1.5	2	-	-	-	116	114	110	106	102	98	89	78	72	65	52	-	-
PVT 2-15	25x25	1.5	2	-	-	-	134	130	127	123	118	112	100	90	82	73	60	-	-
PVT 2-18	25x25	22	3	-	-	-	161	157	153	148	142	136	121	108	100	91	76	-	-
PVT 2-22	25x25	2.2	3	-	-	-	197	192	186	180	173	165	148	130	120	110	90	-	-
PVT 2-26	25x25	3	4	-	-	-	232	228	221	214	206	198	179	158	144	130	110	-	-
PVT 3-2	25x25	0.37	0.5	-	-	-	-	12.5	12	11.5	11	11	10.5	10	9	8	7	7	6
PVT 3-3	25x25	0.37	0.5	-	-	-	-	19	19	18.5	18	17.5	16.5	15	14	13	12	11	9
PVT 3-4	25x25	0.37	0.5	-	-	-	-	25	25	24	24	23	21.5	20	19	18	16	15	12
PVT 3-5	25x25	0.37	0.5	-	-	-	-	31	31	30	30	29	27	25	23	22	20	19	16
PVT 3-6	25x25	0.55	0.75	-	-	-	-	36	36	35	35	34	32	30	28	27	24	23	19
PVT 3-7	25x25	0.55	0.75	-	-	-	-	43	42	41	40	39	37	34	32	31	28	27	22
PVT 3-8	25x25	0.75	1	-	-	-	-	49	48	47	46	45	43	39	37	35	32	31	25
PVT 3-9	25x25	0.75	1	-	-	-	-	55	54	53	52	51	48	45	42	40	36	35	28
PVT 3-10	25x25	0.75	1	-	-	-	-	61	60	59	58	57	54	50	47	45	41	39	31
PVT 3-11	25x25	1.1	1.5	-	-	-	-	67	66	64	63	61	58	54	51	49	44	42	34
PVT 3-12	25x25	1.1	1.5	-	-	-	-	73	72	70	69	67	63	58	55	52	47	45	37
PVT 3-13	25x25	1.1	1.5	-	-	-	-	78	77	76	75	73	69	64	60	57	51	49	40
PVT 3-15	25x25	1.1	1.5	-	-	-	-	90	89	88	86	84	79	73	69	66	59	57	46
PVT 3-17	25x25	1.5	2	-	-	-	-	103	102	100	98	96	90	83	79	75	67	64	52
PVT 3-19	25x25	1.5	2	-	-	-	-	115	114	112	110	107	100	92	88	83	75	72	58
PVT 3-21	25x25	2.2	3	-	-	-	-	128	126	124	122	119	112	102	98	91	82	79	64
PVT 3-23	25x25	2.2	3	-	-	-	-	140	138	135	133	130	122	112	107	100	90	86	70
PVT 3-25	25x25	2.2	3	-	-	-	-	151	149	147	144	141	131	122	116	109	98	94	76
PVT 3-27	25x25	2.2	3	-	-	-	-	164	162	159	156	152	143	132	124	117	105	101	82
PVT 3-29	25x25	2.2	3	-	-	-	-	175	173	170	167	163	153	142	133	126	113	109	88
PVT 3-31	25x25	3	4	-	-	-	-	187	185	182	179	175	165	153	142	135	121	116	94
PVT 3-33	25x25	3	4	-	-	-	-	199	197	194	191	187	176	163	151	145	130	125	100
PVT 3-36	25x25	3	4	-	-	-	-	218	215	212	208	204	192	178	168	159	143	137	109

PVS also a vai la bl e/tamb/^n *disponible/aussi disponible*

Performance curve in *page/Curva en pdgina/Courbe en page* 179-181

TECHNICAL DATA/DXITOS *T^CNICOS/DONN^ES TECHNIQUES* **50 Hz n=29001/min**

MODEL *MODELO* *MODULE*	DN mm	Power *Potencia* *Puissance* kw	hp	Q=DEUVER/f/CAUDAL/DtBIT us gpm	35	44	53	62	70	79	88	97	106	115	123	141	159	176
				l/min	133	167	200	233	267	300	333	367	400	433	467	533	600	667
				m³/h	8	10	12	14	16	18	20	22	24	26	28	32	36	40
				H=Head/Altura/Hauteur(,m)														
PVT 16-2	50x50	2.2	3	27	26	25	24	22	21	19	16	-	-	-	-	-	-
PVT 16-3	50x50	3	4	41	40	38	37	34	32	29	25	•	--		-		
PVT 16-4	50x50	4	5.5	54	53	52	49	46	43	38	34	-	-	-	-	-	• •	-
PVT 16-5	50x50	5.5	7.5	68	67	65	62	58	54	48	43	-	--		-		--	
PVT 16-6	50x50	5.5	7.5	82	80	78	74	70	64	58	52	-	-	-	-	-	-
PVT 16-7	50x50	7.5	10	96	95	91	87	82	76	68	61	-	-j -		-		- -	
PVT 16-8	50x50	7.5	10	110	108	104	99	94	86	77	70	-	-	-	-	-	-
PVT 16-10	50x50	11	15	138	136	131	125	118	109	97	87	-	--		-		▬ J	
PVT 16-12	50x50	11	15	166	162	157	150	141	130	116	105	-	-	-	-	-	-
PVT 16-14	50x50	15	20	194	190	184	175	166	152	136	122	-	-1 -		-		--	
PVT 16-16	50x50	15	20	222	217	210	200	189	174	156	140	-	-	-	-	-	-
PVT 20-1	50x50	1.1	1.5	-	13.5	13	12.5	12	11	10	9	8	7	6	-	-	-
PVT 20-2	50x50	2.2	3	-	27	26.5	26	25	24	23	22	20	18	15	-	-	-
PVT 20-3	50x50	4	5.5	-	40	39.5	39	38	37	35	33	30	27	24	-		--	
PVT 20-4	50x50	5.5	7.5	-	54	53	52	51	49	47	44	41	37	33	-	-	-
PVT 20-5	50x50	5.5	7.5	■	67	66	64	62	60	58	55	50	45	40	-		--	
PVT 20-6	50x50	7.5	10	-	81	79	77	75	73	70	66	61	55	49	-	-	-
PVT 20-7	50x50	7.5	10	-	95	93	91	89	86	82	77	71	65	58	-		-1 -	
PVT 20-8	50x50	11	15	-	109	107	105	102	99	94	89	82	75	67	-	-	-
PVT 20-10	50x50	11	15	-	136	134	131	128	124	118	111	103	95	85	-		--	
PVT 20-12	50x50	15	20	-	164	162	158	154	149	142	133	124	114	102	-	-	-
PVT 20-14	50x50	15	20	-	192	189	185	180	174	166	156	145	133	119	-		■ 1 ■	
PVT 20-17	50x50	18.5	25	-	234	230	225	219	212	202	190	177	162	145	-	-	-
PVT 32-10-1	65x65	1.5	2	-	-	-	-	14	14	13	13	12	12	11	9	7	4
PVT 32-10	65x65	2.2	3	-	-	-	-	18	18	17	16	15	15	14	13	11	8
PVT 32-20-2	65x65	3	4	-	-	-	-	29	29	28	27	26	25	23	20	16	11
PVT 32-20	65x65	4	5.5	-	-	-	-	36	35	34	33	32	31	29	27	23	18
PVT 32-30-2	65x65	5.5	7.5	-	-	-	-	47	46	44	43	41	40	38	33	28	21
PVT *32-30*	65x65	5.5	7.5	-	-	-	-	54	53	51	50	48	46	44	40	35	27
PVT 32-40-2	65x65	7.5	10	-	-	-	-	65	64	62	60	58	56	53	46	40	30
PVT 32-40	65x65	7.5	10	-	-	-	-	72	71	69	67	65	62	59	53	47	37
PVT 32-50-2	65x65	11	15	-	-	-	-	83	81	79	77	74	71	68	60	52	41
PVT 32-50	65x65	11	15	-	-	-	-	90	88	86	84	81	78	74	67	59	47
PVT 32-60-2	65x65	11	15	-	-	-	-	101	**99**	97	94	90	87	83	74	65	51
PVT 32-60	65x65	11	15	-	-	-	-	108	106	104	101	97	94	90	81	72	57
PVT 32-70-2	65x65	15	20	•	•	-	-	119	117	114	HI	107	103	98	88	78	60
PVT 32-70	65x65	15	20	-	-	-	-	126	124	121	117	113	109	105	95	85	67
PVT 32-80-2	65x65	15	20	•	-	-	-	136	134	131	127	123	119	114	102	90	71
PVT 32-80	65x65	15	20	-	-	-	-	144	141	138	134	130	125	120	109	97	77
PVT 32-90-2	65x65	18.5	25	-	-	-	-	154	151	148	144	140	135	129	H7	102	82
PVT 32-90	65x65	18.5	25	-	-	-	-	162	159	156	152	147	142	136	124	109	88
PVT 32-100-2	65x65	18.5	25	-	-	-	-	175	171	166	162	157	152	146	131	115	91
PVT 32-100	65x65	18.5	25	-	-	-	-	182	178	173	169	164	158	152	138	122	98
PVT 32-110-2	65x65	22	30	-	-	-	-	193	189	184	179	173	169	164	146	128	102
PVT 32-110	65x65	22	30	-	-	-	-	200	196	191	186	180	174	168	153	135	109
PVT 32-120-2	65x65	22	30	■	■	-	-	211	206	201	195	189	184	178	160	140	113
PVT 32-120	65x65	22	30	-	-	-	-	218	213	208	202	196	190	184	167	147	120
PVT 32-130-2	65x65	30	40	-	-	-	-	230	224	218	212	206	200	193	174	153	124
PVT 32-130	65x65	30	40	-	-	-	-	237	231	225	219	213	207	200	181	160	131
PVT 32-140-2	65x65	30	40	-	-	-		247	241	235	229	222	216	210	189	165	135
PVT 32-140	65x65	30	40	-	-	-	-	255	249	242	236	229	223	216	196	172	142
PVT 32-150-2	65x65	30	40	-	-	-	-	266	260	253	246	239	232	224	203	178	145
PVT 32-150	65x65	30	40	-	-	-	-	274	267	260	253	246	239	231	210	185	**152**
PVT 32-160-2	65x65	30	40	-	-	-	-	284	277	270	263	255	248	240	218	190	156
PVT 32-160	65x65	30	40	-	-	-	-	292	285	277	270	262	254	246	225	197	163

PVS also available/tamb/^n *disponible/aussidisponible*

Performance curve in *page/Curva enpagiňa/Courbe en page* 186-188

TECHNICAL ***DfiJMDATOS T^CNICOS/DONN^ES TECHNIQUES*** **50 Hz n=2900 1 /min**

MODEL *MODELO* *MODULE*	DN mm	Power *Potencia* *Puissance* kw	hp	Q=DELIVERY/CXK/D4L/D^e/T us gpm	110	132	154	176	185	198	220	242	264	286	308	352	374	396	441	485
				l/min	417	500	583	667	700	750	833	917	1000	1083	1167	1333	1417	1500	1667	1833
				m»/h	25	30	35	40	42	45	50	55	60	65	70	80	85	90	100	110
				H=Head/A/tura/Houteur(m)																
PVT 45-10-1	80x80	3	4	20	19	18	17	16	15	13	11	-	-	-	-	-	-	-	-
PVT 45-10	80x80	4	5.5	24	23	22	21	20	19	18	16	-	-	-	-	-	-	-	-
PVT 45-20-2	80x80	5.5	7.5	40	38	36	33	32	30	27	23	-	-	-	-	-	-	-	-
PVT 45-20	80x80	7.5	10	48	46	44	42	41	39	35	31	-	-	-	-	-	-	-	-
PVT 45-30-2	80x80	11	15	63	61	58	54	52	50	44	38	-	-	-	-	-	-	-	-
PVT 45-30	80x80	11	15	71	69	66	63	61	58	53	47	-	-	-	-	-	-	-	-
PVT 45-40-2	80x80	15	20	87	84	80	75	73	69	62	54	-	-	-	-	-	-	-	-
PVT 45-40	80x80	15	20	95	92	88	84	81	78	71	62	-	-	-	-	-	-	-	-
PVT 45-50-2	80x80	18.5	25	111	107	102	96	93	88	80	69	-	-	-	-	-	-	-	-
PVT 45-50	80x80	18.5	25	119	115	110	105	101	97	88	78	-	-	-	-	-	-	-	-
PVT 45-60-2	80x80	22	30	135	130	124	117	113	108	97	85	-	-	-	-	-	-	-	-
PVT 45-60	80x80	22	30	143	138	132	125	122	116	106	93	-	-	-	-	-	-	-	-
PVT 45-70-2	80x80	30	40	158	152	146	138	134	127	115	100	-	-	-	-	-	-	-	-
PVT 45-70	80x80	30	40	166	161	154	146	142	135	124	109	-	-	-	-	-	-	-	-
PVT 45-80-2	80x80	30	40	182	175	168	159	154	146	133	116	-	-	-	-	-	-	-	-
PVT 45-80	80x80	30	40	190	184	176	167	162	154	141	124	-	-	-	-	-	-	-	-
PVT 45-90-2	80x80	30	40	205	198	190	180	174	166	150	132	-	-	-	-	-	-	-	-
PVT 45-90	80x80	37	50	214	207	198	188	183	174	159	140	-	-	-	-	-	-	-	-
PVT 45-100-2	80x80	37	50	230	221	212	200	194	185	168	147	-	-	-	-	-	-	-	-
PVT 45-100	80x80	37	50	238	230	220	209	203	193	177	155	-	-	-	-	-	-	-	-
PVT 45-110-2	80x80	45	60	255	246	236	223	217	206	188	165	-	-	-	-	-	-	-	-
PVT 45-110	80x80	45	60	263	255	244	232	225	214	196	173	-	-	-	-	-	-	-	-
PVT 45-120-2	80x80	45	60	280	270	259	245	238	226	206	181	-	-	-	-	-	-	-	-
PVT 45-120	80x80	45	60	289	280	268	255	247	236	216	190	-	-	-	-	-	-	-	-
PVT 45-130-2	80x80	45	60	305	294	282	267	259	247	225	198	-	-	-	-	-	-	-	-
PVT 64-10-1	100x100	4	5.5	-	19	19	18	18	17	16	15	14	13	11	8	-	-	-	-
PVT 64-10	100x100	5.5	7.5	-	27	26	25	25	24	23	22	21	20	18	15	-	-	-	-
PVT 64-20-2	100x100	7.5	10	-	39	38	36	36	35	33	31	29	26	23	17	-	-	-	-
PVT 64-20-1	100x100	11	15	-	46	45	44	43	42	40	38	36	33	30	24	-	-	-	-
PVT 64-20	100x100	11	15	-	53	52	51	50	49	47	45	43	40	37	30	-	-	-	-
PVT 64-30-2	100x100	15	20	-	66	64	62	61	59	56	53	50	46	41	32	-	-	-	-
PVT 64-30-1	100x100	15	20	-	73	71	69	68	66	63	60	57	53	48	39	-	-	-	-
PVT 64-30	100x100	18.5	25	-	80	78	76	75	73	70	67	64	60	55	46	-	-	-	-
PVT 64-40-2	100x100	18.5	25	-	92	90	87	86	84	80	76	71	66	60	47	-	-	-	-
PVT 64-40-1	100x100	22	30	-	100	97	94	93	91	87	83	78	73	67	54	-	-	-	-
PVT 64-40	100x100	22	30	-	107	104	101	100	98	94	90	85	80	74	61	-	-	-	-
PVT 64-50-2	100x100	30	40	-	121	118	114	112	110	105	100	95	88	80	64	-	-	-	-
PVT 64-50-1	100x100	30	40	-	128	125	121	119	117	112	107	102	95	87	71	-	-	-	-
PVT 64-50	100x100	30	40	-	136	133	129	127	124	119	114	109	102	94	78	-	-	-	-
PVT 64-60-2	100x100	30	40	-	150	146	142	140	137	131	125	118	110	101	81	-	-	-	-
PVT 64-60-1	100x100	37	50	-	157	153	149	147	144	138	132	125	117	108	88	-	-	-	-
PVT 64-60	100x100	37	50	-	164	160	156	154	151	145	139	132	124	115	95	-	-	-	-
PVT 64-70-2	100x100	37	50	-	179	174	169	167	163	156	149	141	132	121	99	-	-	-	-
PVT 64-70-1	100x100	37	50	-	186	181	176	174	170	163	156	148	139	128	106	-	-	-	-
PVT 64-70	100x100	45	60	-	193	188	183	181	177	170	163	155	146	13S	112	-	-	-	-
PVT 64-80-2	100x100	45	60	-	207	202	196	193	189	182	173	164	154	142	116	-	-	-	-
PVT 64-80-1	100x100	45	60	-	215	209	203	200	196	189	180	171	161	149	123	-	-	-	-
PVT 90-10-1	100x100	5.5	7.5	-	-	-	-	-	-	22	21	19	18	17	16	14	13	10	6
PVT 90-10	100x100	7.5	10	-	-	-	-	-	-	25	25	24	23	22	21	20	19	16	12
PVT 90-20-2	100x100	11	15	-	-	-	-	-	-	41	40	39	38	36	32	30	28	22	15
PVT 90-20	100x100	15	20	-	-	-	-	-	-	53	52	50	49	47	44	41	40	36	30
PVT 90-30-2	100x100	18.5	25	-	-	-	-	-	-	68	67	65	63	60	55	52	49	41	32
PVT 90-30	100x100	22	30	-	-	-	-	-	-	81	79	77	75	72	67	64	62	55	48
PVT 90-40-2	100x100	30	40	-	-	-	-	-	-	98	96	93	90	87	80	75	72	62	50
PVT 90-40	100x100	30	40	-	-	-	-	-	-	110	108	105	103	100	92	86	84	76	66
PVT 90-50-2	100x100	37	50	-	-	-	-	-	-	126	123	120	117	113	104	98	93	81	68
PVT 90-50	100x100	37	50	-	-	-	-	-	-	139	135	131	128	124	115	110	106	94	83
PVT 90-60-2	100x100	45	60	-	-	-	-	-	-	1S5	152	148	144	139	129	122	117	102	86
PVT 90-60	100x100	45	60	-	-	-	-	-	-	168	164	160	155	150	141	134	130	117	103

PVS also available/tamb/^n *disponible/aussidisponible*

Performance curve in page/Curva en *pdgina/Courbe enpage* 189-191

MATERIAL DESCRIPTION/DFSCR/PC/d/V *DE MATERIAL/DESCRIPTION DU MATERIEL*

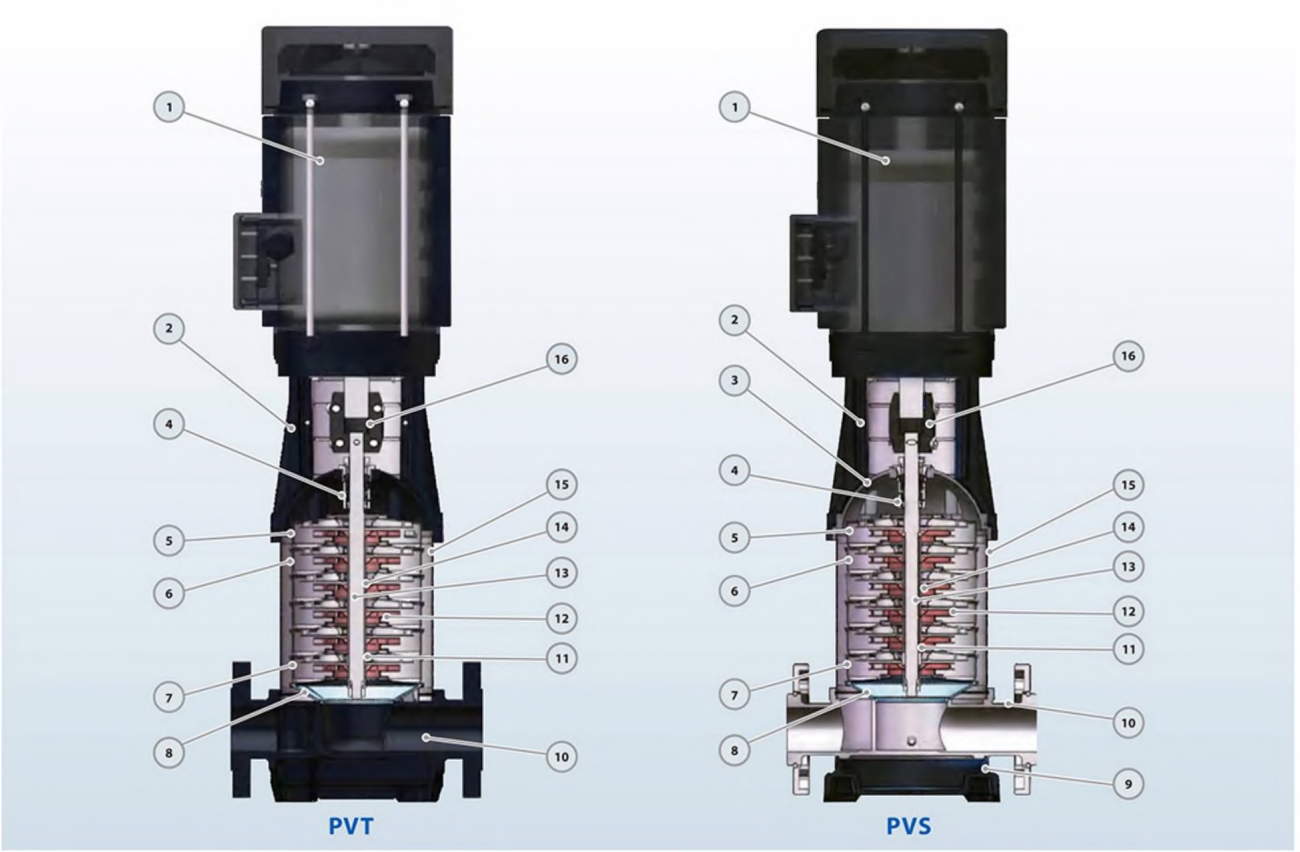

No.	Description *Descripcidn* *Description*	Material *Material* *Materiel*
1	Motor *Motor* *Moteur*	IP55 Class F *IP55 Close F* *IP55 dasse F*
2	Pump Case *Cuerpo de Bomba* *Boitier de pompe*	Cast iron *Fundicidn* *Fonte*
3	Seal Base *Soporte Sello* *Seal Base*	SS3O4 *Inox 304* *Inox 304*
4	Mechanical Seal *Sello Mecdnico* *Garniture micanique*	SS304 *Inox 304* *Inox 304*
5	Top Diffuser *Difusor Tope* *Diffuseur sup^rieur*	SS3O4 *Inox 304* *Inox 304*
6	Diffuser *Difusor* *Diffuseur*	SS3O4 *Inox 304* *Inox304*
7	Support Diffuser *Difusor Soporte* *Diffuseur de support*	SS3O4 *Inox 304* *Inox 304*
8	Inducer *Inductor* *Inducteur*	SS3O4 *Inox 304* *Inox 304*

No.	Description *Descripcidn* *Description*	Material *Material* *Materiel*
9	Base Plate *Placa Base* *Plaque de base*	Cast iron *Fundicidn* *Fonte*
10	Inlet&Outlet Chamber *Cdmara de entrada y salida* *Chambre d'entr^e et de sortie*	PVTCast iron PVSSS304 *PVT:Fundid6n PVS:Inox304* *PVT: Fonte PVS: Inox304*
11	Bearing *Cojinete* *Palier*	Tungsten Carbide *Carburo de Tungsteno* *Le carbure de tungst^ne*
12	Impeller *Impulsor* *Roue*	SS304 *Inox 304* *Inox 304*
13	Shaft £/e *Arbre*	SS304 *Inox 304* *Inox 304*
14	Impeller Sleeve *Casquillo Impulsor* *Manchon de roue*	SS304 *Inox 304* *Inox 304*
15	Cylinder *Cilindro* *Cylindre*	SS304 *Inox 304* *Inox 304*
16	Coupling *Unidn* *Couplage*	Carbon Steel *Acero al Carbono* *Acier Carbone*

DIMENSIONS AND \WE\GHT/DIMENSIONES Y PESOS/DIMENSIONS ETPOIDS

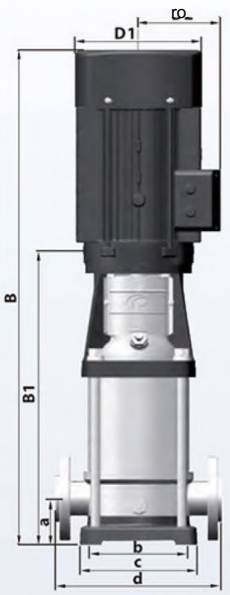

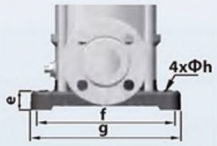

PVS

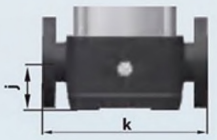

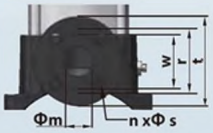

PVT

MODEL *MODELO MODULE*	Bl	B	Dl	D2	COMMON *COMUN COMMUN*	kg
1-2	258	483	148	117		20
1-3	276	501	148	117		20
14	294	519	148	117		21
15	312	537	148	117		21
1-6	330	555	148	117		22
1-7	348	573	148	117		*23*
1-8	366	591	148	117		*24*
19	384	609	148	117		25
1-10	402	627	148	117		26
1-11	420	64S	148	117		26
1-12	448	693	170	142		29
1-13	466	711	170	142		30
1-15	502	747	170	142		31
1-17	538	783	170	142		33
1-19	574	819	170	142		34
1-21	610	855	170	142		35
1-23	646	891	170	142		36
1-25	692	982	190	155		42
1-27	728	1018	190	155		43
1-30	782	1072	190	155		45
1-33	836	1126	190	155		49
1-36	890	1180	190	155		51
2-2	258	483	148	117	DN=25	20
2-3	276	501	148	117	a=50	20
2-4	294	519	148	117	b=100	22
2-5	312	537	148	H7	c=150	*23*
2-6	340	585	170	142	d=210	*26*
2-7	358	603	170	142	e=20	*26*
2-9	394	639	170	142	f=180	28
2-11	430	675	170	142	g=210	29
2-13	476	766	190	155	h=13	35
2-15	512	802	190	155	J=75	36
2-18	566	856	190	155	k=250	41
2-22	638	928	190	155	m=32	42
2-26	720	1065	197	165	n=4	52
3-2	258	483	148	117	r=85	20
3-3	276	501	148	117	s=14	20
3-4	294	519	148	117	t=115	21
3-5	312	537	148	117	w=60	21
3-6	330	555	148	117		23
3-7	348	573	148	117		24
3-8	376	621	170	142		27
3-9	394	639	170	142		28
3-10	412	657	170	142		28
3-11	430	675	170	142		29
3-12	448	693	170	142		30
313	466	711	170	142		31
3-15	502	747	170	142		32
3-17	548	838	190	155		38
3-19	584	874	190	155		39
3-21	620	910	190	155		42
3-23	656	946	190	155		43
3-25	692	982	190	155		44
3-27	728	1018	190	155		45
3-29	764	1054	190	155		46
3-31	810	1155	197	165		54
3-33	846	1191	197	165		55
3-36	900	1245	197	165		57

MODEL *MODELO MODULE*	B1	B	Dl	D2	COMMON *COMUN COMMUN*	kg
4-2	276	501	148	117	DN=32	21
4-3	303	528	148	117	a=50	22
4-4	340	585	170	142	b=100	25
4-5	367	612	170	142	c=150	27
4-6	394	639	170	142	d=210	27
4-7	431	721	190	15S	e=20	33
4-8	458	748	190	155	f=180	33
4-10	512	802	190	155	g=210	37
4-12	566	856	190	155	h=13	38
4-14	630	975	197	16S	j=75	46
4-16	684	1029	197	165	k=250	48
4-19	765	1120	230	188	m=32	57
4-22	846	1201	230	188	n=4	59
8-2-1	347	592	170	142	r=100	32
8-2	347	592	170	142	s=18	32
8-3	*377*	622	170	142	t=140	34
8-4	417	707	190	155	w=60	40
8-5	447	737	190	155		44
8-6	477	767	190	155		45
8-8	547	892	197	165		53
8-10	607	962	230	188		64
8-12	667	1022	230	188		66
8-14	747	1137	260	208	DN=40	81
8-16	807	1197	260	208	a=80	84
8-18	867	1257	260	208	b=130	93
8-20	927	1317	260	208	c=199	94
10-1	347	592	170	142	d=260	40
10-2	347	592	170	142	e=25	41
10-3	*377*	622	170	142	f=215	43
10-4	417	707	190	1SS	g=247	49
10-5	447	*737*	190	155	h = 14	53
10-6	477	767	190	155	j = 80	54
10-7	517	862	197	165	k=280	64
10-8	547	892	197	165	m=50	65
10-9	577	922	197	165	n=4	66
10-10	607	962	230	188	r=110	74
10-12	667	1022	230	188	s=18	76
10-14	747	1137	260	208	t=150	100
10-16	807	1197	260	208	w=80	102
10-18	867	1257	260	208		107
10-20	927	1317	260	208		109
10-22	987	1377	260	208		111
12-2	367	657	190	155	DN=50	39
12-3	397	687	190	155	a=90	43
12-4	437	782	197	165	b=130	51
12-5	467	812	197	165	c~199	53
12-6	497	852	230	188	d=260	61
12-7	547	937	260	208	e=35	73
12-8	577	967	260	208	f=215	74
12-9	607	997	260	208	9=247	76
12-10	637	1027	260	208	h=14	83
12-12	697	1087	260	208	j = 90	87
12-14	845	1345	330	255	k=300	157
12-16	905	1405	330	255	m=50	161
12-18	965	1465	330	255	n=4	164
					r=125	
					s=18	
					t=165	
					w=80	

DIMENSIONS AND \NE\GHT/DIMENSIONES Y PESOS/DIMENSIONS ETPOIDS

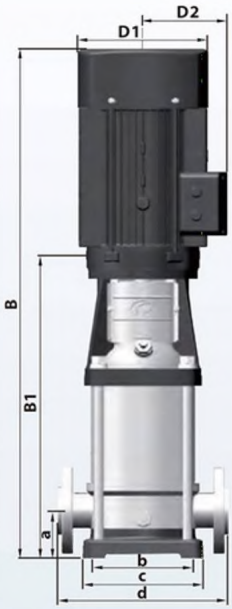

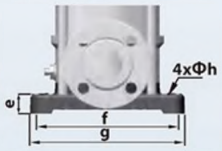

PVS

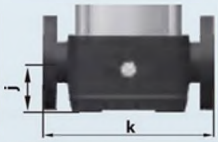

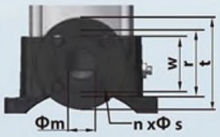

PVT

MODEL *MODELO MODULE*	Bl	B	Di	D2	COMMON *COMÚN COMMUN*	kg
16-2	397	687	190	155	DN-50 a=90 b=130 c=199 d=260 e=35 f=215 9=247 h=14 j=90 k=300 m=50 n=4 r=125 s=18 t=165 w-80	42
16-3	452	797	197	165		50
16-4	497	852	230	188		59
16-5	562	952	260	208		76
16-6	607	997	260	208		77
16-7	652	1042	260	208		84
16-8	697	1087	260	208		86
16-10	875	1375	330	255		158
16-12	965	1465	330	255		161
16-14	1055	1555	330	255		174
16-16	1145	1645	330	255		178
20-1	387	632	170	142		33
20-2	397	687	190	155		42
20-3	452	807	230	188		58
20-4	517	907	260	208		74
20-5	562	952	260	208		76
20-6	607	997	260	208		82
20-7	652	1042	260	208		84
20-8	785	1285	330	255		153
20-10	875	1375	330	255		157
20-12	965	1465	330	255		170
20-14	1055	1555	330	255		172
20-17	1190	1740	330	255		195
32-10-1	505	795	190	155	DN=65 a=105 b=170 c=225 d=320 e=30 f=240 g=298 h=14 j=105 k=320 m=74 n=8 r=145 s=18 t=185 w=107	64
32-10	505	795	190	155		68
32-20-2	575	920	197	165		77
32-20	575	930	230	188		85
32-30-2	645	1035	260	208		100
32-30	645	1035	260	208		100
32-40-2	715	110S	260	208		109
32-40	715	1105	260	208		109
32-50-2	890	1390	330	255		181
32-50	890	1390	330	255		181
32-60-2	960	1460	330	255		185
32-60	960	1460	330	255		185
32-70-2	1030	1530	330	255		199
32-70	1030	1530	330	255		199
32-80-2	1100	1600	330	255		203
32-80	1100	1600	330	255		203
32-90-2	1170	1720	330	255		222
32-90	1170	1720	330	255		222
32-100-2	1240	1790	330	255		227
32-100	1240	1790	330	255		227
32-110-2	1310	1885	360	285		272
32-110	1310	1885	360	285		272
32-120-2	1380	195S	360	285		276
32-120	1380	1955	360	285		276
32-130-2	1450	2100	400	310		337
32-130	1450	2100	400	310		337
32-140-2	1520	2170	400	310		341
32-140	1520	2170	400	310		341
32-150-2	1590	2240	400	310		345
32-150	1590	2240	400	310		345
32-160-2	1660	2310	400	310		350
32-160	1660	2310	400	310		350

MODEL *MODELO MODULE*	B1	B	Di	D2	COMMON *COMÚN COMMUN*	kg
45-10-1	561	906	197	165	DN = 80 a=140 b=190 c=245 d=365 e=45 f=266 g=330 h=14 j=140 k=365 m=80 n=8 r=160 s=18 t=200 w=120	83
45-10	561	916	230	188		90
45-20-2	641	1031	260	208		105
45-20	641	1031	260	208		110
45-30-2	826	1326	330	255		183
45-30	826	1326	330	255		183
45-40-2	906	1406	330	255		197
45-40	906	1406	330	255		197
45-50-2	986	1536	330	255		221
45-50	986	1536	330	255		221
45-60-2	1066	1641	360	285		261
45-60	1066	1641	360	285		261
45-70-2	1146	1796	400	310		320
45-70	1146	1796	400	310		320
45-80-2	1226	1876	400	310		324
45-80	1226	1876	400	310		324
45-90-2	1306	1956	400	310		328
45-90	1306	1956	400	310		352
45-100-2	1386	2036	400	310		355
45-100	1386	2036	400	310		355
45-110-2	1466	2151	450	345		426
45-110	1466	2151	450	345		426
45-120-2	1546	2231	450	345		432
45-120	1546	2231	450	345		432
45-130-2	1626	2311	450	345		438
64-10-1	561	916	230	188	DN=100 a-140 b=190 c=245 d=365 e=45 f=266 g=330 h=14 j=140 k=365 m=100 n=8 r=180 s=18 t=220 w=150	93
64-10	561	951	260	208		105
64-20-2	644	1034	260	208		110
64-20-1	754	1254	330	255		182
64-20	754	1254	330	255		182
64-30-2	836	1336	330	255		196
64-30-1	836	1336	330	255		197
64-30	836	1386	330	255		221
65-40-2	919	1469	330	255		225
64-40-1	919	1494	360	285		258
64-40	919	1494	360	285		258
64-50-2	1001	1651	400	310		319
64-50-1	1001	1651	400	310		319
64-50	1001	1651	400	310		320
64-60-2	1084	1734	400	310		325
64-60-1	1084	1734	400	310		349
64-60	1084	1734	400	310		349
64-70-2	1166	1816	400	310		353
64-70-1	1166	1816	400	310		353
64-70	1166	1851	460	340		420
64-80-2	1248	1933	460	340		424
64-80-1	1248	1933	460	340		424
90-10-1	571	961	260	208	DN = 100 a=140 b=199 c=255 d=380 e=45 f=280 g=348 h=14 i=140 1<=380 m=100 n=8 r=180 s=18 t=220 w=150	105
90-10	571	961	260	208		110
90-20-2	773	1273	330	255		181
90-20	773	1273	330	255		192
90-30-2	865	1415	330	255		215
90-30	865	1440	360	285		252
90-40-2	957	1607	400	310		312
90-40	957	1607	400	310		312
90-50-2	1049	1699	400	310		336
90-50	1049	1699	400	310		336
90-60-2	1141	1826	460	340		407
90-60	1141	1826	460	340		407

Multistage Jockey Pumps PV

PV

TECHNICAL DESCRIPTION

- New vertical multistage centrifugal pump

-Original design by PURITY

- Both square motor & round motor available
- YE3 high efficient motor, with protection IP55 class F

-Pump case with anti-corrosive coating

- Impeller in techno-polimer
- Shaft in stainless steel AISI 304 or galvanized iron
- Suction and discharge port in cast iron G20 thread
- Quality NSK bearing, wear resistance mechanical seal

Product Specification (50HZ)

NEW/NUEVO

TECHNICAL DESCRIPTION

-New vertical multistage centrifugal pump
-Original design by PURITY
■ Both square motor & round motor available
-YE3 high efficient motor, with protection IP55 class F
-Pump case with anti-corrosive coating
• Impeller in techno-polimer
■ Shaft in stainless steel AISI 304 or galvanized iron
■ Suction and discharge port in cast iron G20 thread
• Quality NSK bearing, wear resistance mechanical seal

USING LIMITS

■ Liquid temperature between -10°C and +120°C
■ Ambient temperature up to +50°C
■ Max. working pressure 25 bar
■ Continuous service S1

APPLICATIONS

■ Suitable for use with clean water and liquids that are not chemically aggressive towards the materials from which the pump is made. The high efficiency and adaptability of these pumps to even the most unusual of applications, makes them ideal for use in the domestic, civil and industrial sectors; in particular for the distribution of water in combination with pressure sets and for pressure boosting.

TECHNICAL DATA / *DATOS TECNICOS*

50 Hz n=2900 1/min

MODEL *MODELO*	Power *Potencia*		US	Q=DEUVERY / *CAUDAL*																				DN
			QPm	0	5	**11**	13	16	19	21	24	26	29	32	37	42	4B	53	5S	63	69	74	79	
			l/min	0	20	**40**	**50**	60	70	80	90	100	110	120	**140**	160	180	200	220	240	260	280	300	
	kw	hp	m³/h	0	1.2	**2.4**	3	3.6	4.2	4.8	5.4	**6**	6.6	7.2	8.4	9.6	10.8	12	13.2	14.4	15.6	16.8	18	mm
PV 4x7/1.5	1.1	1.5		60.7	56.8	52.1	49	45.9	42.8	38.9	35	30.3	25.7	20.2										25x25
PV 4x9/2	1.5	2		78	73	67	63	59	55	50	45	39	33	26										25x25
PV 4x13/3	22	3		113	105	96.8	91	85.2	79.4	72.2	65	56.3	47.7	37.5										25x25
PV 4x16/4	3	4		139	130	119	112	105	97.8	88.9	80	69.3	58.7	46.2										25x25
PV 6x5/1.5	1.1	1.5		44.4				135.5	33.3	30.9	28.4	26.1	23.4	20.2	14.3	6.8								32x32
PV 6x8/2	1.5	2		71.1				56.7	53.2	49.5	45.5	41.8	37.5	32.4	22.9	10.9								32x32
PV 6x11/3	22	3		97.7				78	73.2	68	62.5	57.5	51.5	44.5	31.5	15								32x32
PV 6x15/4	3	4		133				106	99.8	92.7	85.2	78.4	702	60.7	43	20.5								32x32
PV8x4/1.5	1.1	1.5		36.8						30	28.4	27.2	26	24.4	21.2	17.6	13.2	9.2	4.8					40x40
PV 8x7/2	1.5	2	**H(m)**	64.4						52.5	49.7	47.6	45.5	42.7	37.1	30.8	23.1	16.1	8.4					40x40
PV 8x9/3	22	3		82.8						67.5	63.9	61.2	58.5	54.9	47.7	39.6	29.7	20.7	10.8					40x40
PV 8x12/4	3	4		110						90	85.2	81.6	78	73.2	63.6	52.8	39.6	27.6	14.4					40x40
PV 8x16/5.5	4	5.5		147						120	114	109	104	97.6	84.8	70.4	52.8	36.8	19.2					40x40
PV 12x3/1.5	1.1	1.5		31								25.4	24.7	24	22.4	20.6	18.4	16.2	13.3	10.9	8.3	5.1	2	50x50
PV 12x5/2	1.5	2		51.7								42.4	412	40	37.3	34.3	30.7	27	22.2	18.2	13.8	8.5	3.3	50x50
PV 12x7/3	22	3		72.3								59.3	57.6	56	52.3	48.1	43	37.8	31	25.5	19.4	11.9	4.7	50x50
PV 12x9/4	3	4		93								76.2	74.1	72	67.2	61.8	55.2	48.6	39.9	32.8	24.9	15.4	6	50x50
PV 12x12/5.5	4	5.5		122								102	98.8	96	89.6	82.4	73.6	64.8	53.2	43.8	33.2	20.5	8	50x50
PV 12x17/7.5	5.5	7.5		176								144	140	136	127	117	104	91.8	75.4	62	47	29	11.3	50x50

MODEL *MODELO*	Power *Potencia*		US	Q=DELIVERY/GA£/DZZ.									DN
			gpm	0	26	53	79	106	132	159	185	211	
			l/min	0	100	200	**300**	400	500	600	**700**	800	
	kw	hp	m³/h	0	6	12	18	24	30	36	42	48	mm
PV 30x7/10	7.5	10		104	100	93	83	74	64	49	31	4	
PV 30x9/12	92	12.5	**H(m)**	133	128	119	108	96	82	63	40	5	50x50
PV 30x11/15	11	15		163	156	145	132	116	99	77	48	6	65x65

PERFORMANCE CURVE / *CURVAS DEFUNOONAMIENTO*

50 Hz n=2900 1 /min

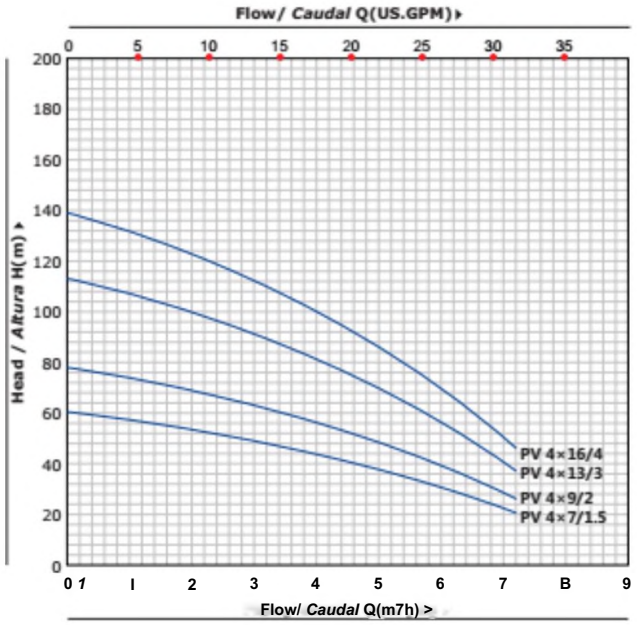

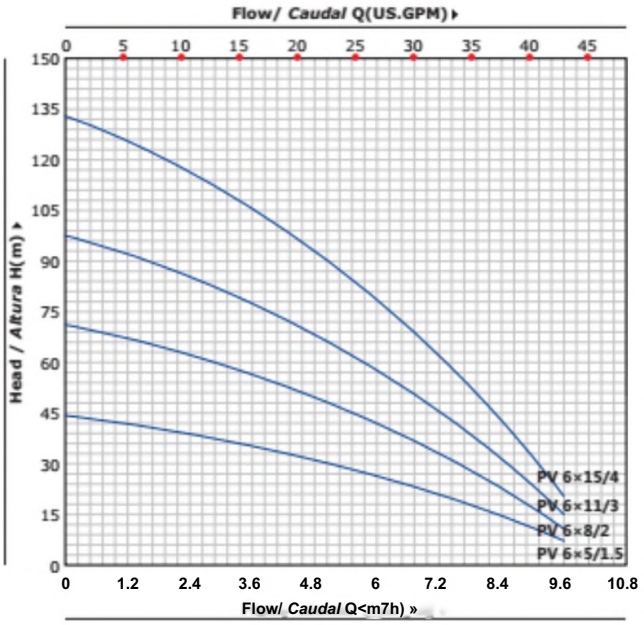

PERFORMANCE CURVE / *CURVAS DE FUNCIONAMIENTO*

50 Hz n=29001/min

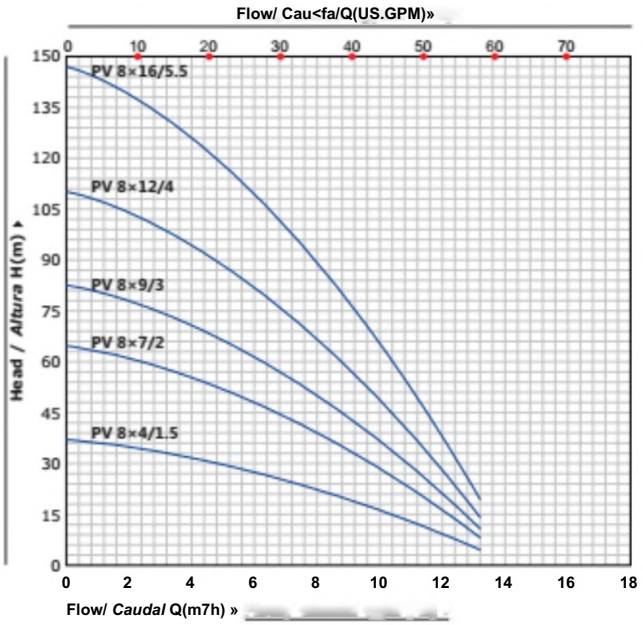

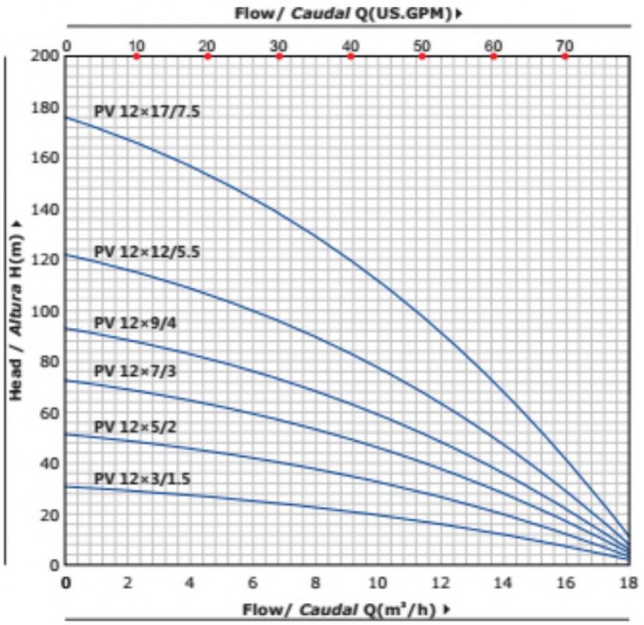

MATERIAL DESCRIPTION / *DESCRIPCIbN DE MATERIAL*

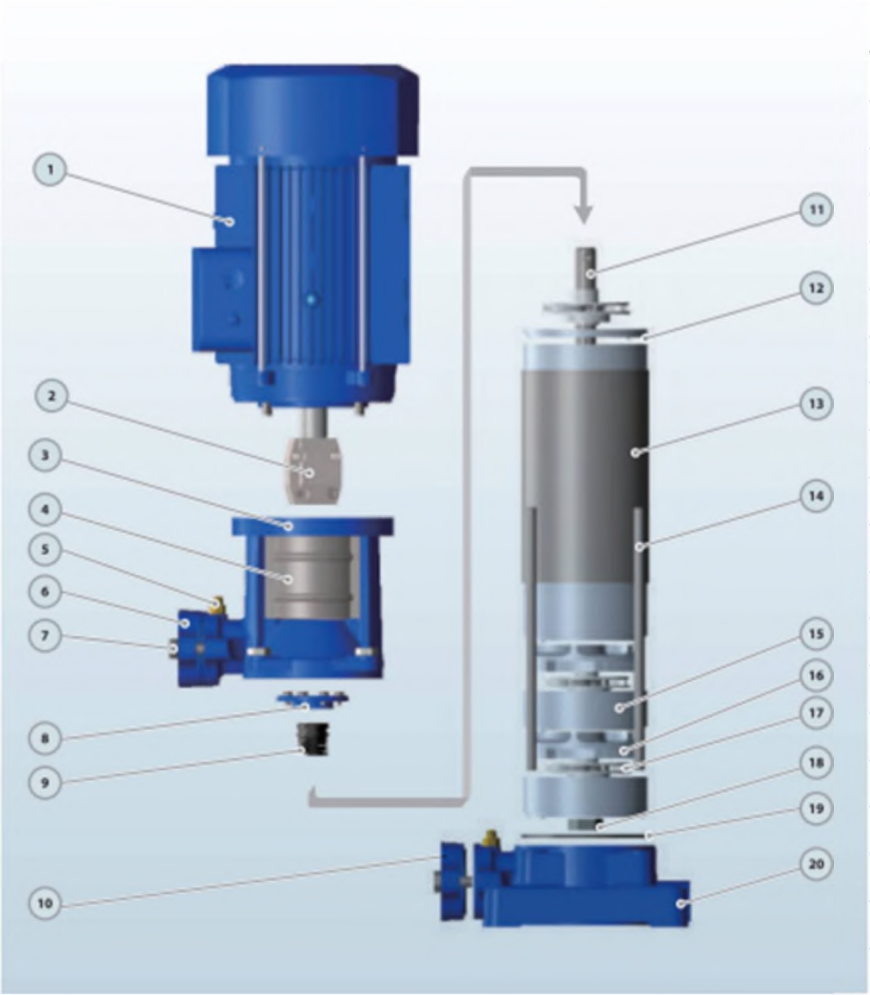

No.	Description *Descrip ción*	Material ***Material***
1	Motor *Motor*	IP55 Class F *IP55ClaseF*
2	Coupling I/nión	Iron *Hierro*
3	Discharge Body *Cuerpo Impulsión*	Cast iron *Fundición*
4	Cover *Taps*	SS304 *Inox 304*
5	Release Valve *Tapón Cebado*	Brass *Bronce*
6	Discharge *Impulsión*	Cast iron *Fundición*
7	Bolt *Pemo*	Steel *Acero*
8	Seal Cover *Tapa Cierre*	Cast iron *Fundición*
9	Mechanical Seal *Ciefre Mecánico*	SiC/Carbon/SS304 *SiC-Grafito-Inox304*
10	Suction *Aspiración*	Cast iron *Fundición*
11	Pump Shaft 印	SS304/45# Iron *Inox 304/45^ hierro*
12	Diffuser Top Cover *Tope Tapa Difusor*	Technopolimer *TecnopoHmero*
13	Pump Cover *Tapa Bomba*	SS304 *Inox 304*
14	Through BoK *Pemo*	Steel *Acero*
15	Diffuser Cover *Tapa Difusor*	Technopolimer with SS304 ring *Tecnopolmero con Inox aniDo*
16	Diffuser *Difusor*	Technopolimer with SS304 ring *TecnopoHmero con Inox aniHo*
17	Impeller *Impufsor*	Technopolimer TecnopoAimefD
18	Impeller Nut *Tuerca de Impulsor*	Galvanized Steel *Acero Galvanizado*
19	O-ring *Junta Tórica*	Rubber Cauc/io
20	Suction Body *Cuerpo Aspiración*	Cast iron *Fundición*

PERFORMANCE CURVE / *CURVAS DEFUNCIONAMIENTO*

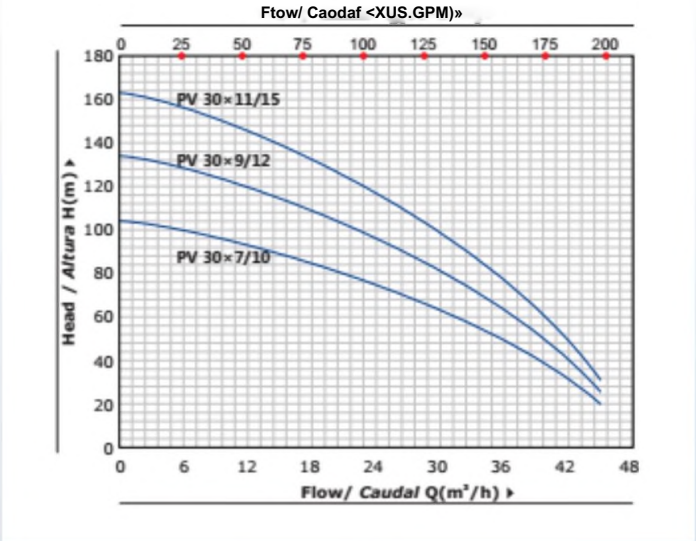

DIMENSIONS AND WEIGHT / *DIMEN^IONES Y PESOS*

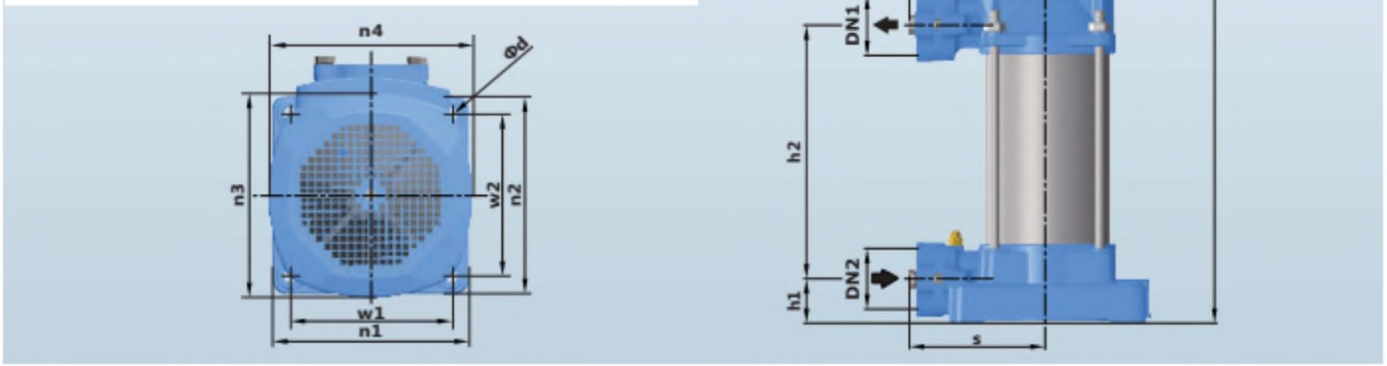

MODEL *MODELO*	DIMEN SION S / *DIMENSIONES* mm															ka	
	DN1	DN2	N	a	s	h	hi	h2	w1	w2	n1	n2	n3	n4	d	⊢	3-
PV 4x7/1.5	25/32	25/32	7	141	141	720	45.5	261.5	165	165	202	202	175	175	12	**28.0**	**27.0**
PV 4x9/2	25/32	25/32	9	141	141	790	45.5	331.5	165	165	202	202	175	175	12	**33.0**	**32.0**
PV 4x13/3	25/32	25/32	13	141	141	930	45.5	471.5	165	165	202	202	175	175	12	**38.0**	**37.0**
PV 4x16/4	25/32	25/32	16	141	141	1082	45.5	576.5	165	165	202	202	195	195	12	**48.0**	**47.0**
PV 6x5/1.5	25/32	25/32	5	141	141	650	45.5	191.5	165	165	202	202	175	175	12	**26.0**	**25.0**
PV 6x8/2	25/32	25/32	8	141	141	755	45.5	296.5	165	165	202	202	175	175	12	**31.0**	**30.0**
PV6x11/3	25/32	25/32	11	141	141	860	45.5	401.5	165	165	202	202	175	175	12	**36.0**	**35.0**
PV 6x15/4	25/32	25/32	15	141	141	1047	45.5	541.5	165	165	202	202	195	195	12	**46.0**	**45.0**
PV8x4/1.5	40/50	40/50	4	141	141	615	45.5	156.5	165	165	202	202	175	175	12	**26.0**	**25.0**
PV 8x7/2	40/50	40/50	7	141	141	720	45.5	261.5	165	165	202	202	175	175	12	**31.0**	**30.0**
PV 8x9/3	40/50	40/50	9	141	141	790	45.5	331.5	165	165	202	202	175	175	12	**36.0**	**35.0**
PV 8x12/4	40/50	40/50	12	141	141	942	45.5	436.5	165	165	202	202	195	195	12	**46.0**	**45.0**
PV 8x16/5.5	40/50	40/50	16	141	141	1082	45.5	576.5	165	165	202	202	195	195	12	-	**50.0**
PV 12x3/1.5	40/50	40/50	3	141	141	580	45.5	121.5	165	165	202	202	175	175	12	**25.0**	**24.0**
PV 12x5/2	40/50	40/50	5	141	141	650	45.5	191.5	165	165	202	202	175	175	12	**30.0**	**29.0**
PV 12x7/3	40/50	40/50	7	141	141	720	45.5	261.5	165	165	202	202	175	175	12	**35.0**	**34.0**
PV 12x9/4	40/50	40/50	9	141	141	837	45.5	331.5	165	165	202	202	195	195	12	**45.0**	**44.0**
PV 12x12/5.5	40/50	40/50	12	141	141	942	45.5	436.5	165	165	202	202	195	195	12	-	50.0
PV 12x17/7.5	40/50	40/50	17	141	141	1167	45.5	611.5	165	165	202	202	204	204	12	•	**60.0**
PV 30x7/10	50/65	50/65	7	170	170	1046	62	416	187	187	230	230	260	260	12	-	**86.0**
PV 30x9/12	50/65	50/65	9	170	170	1153	62	523	187	187	230	230	260	260	12	-	**92.0**
PV 30x11/15	50/65	50/65	11	170	170	1260	62	630	187	187	230	230	260	260	12	-	**100**

Product Specification (60HZ)

NEW/NUEVO

TECHNICAL DESCRIPTION

-New vertical multistage centrifugal pump
-Original design by PURITY
■ Both square motor & round motor available
-YE3 high efficient motor, with protection IP55 class F
-Pump case with anti-corrosive coating
• Impeller in techno-polimer
■ Shaft in stainless steel AISI 304 or galvanized iron
■ Suction and discharge port in cast iron G20 thread
• Quality NSK bearing, wear resistance mechanical seal

USING LIMITS

■ Liquid temperature between -10°C and +120°C
■ Ambient temperature up to +50°C
■ Max. working pressure 25 bar
■ Continuous service S1

APPLICATIONS

■ Suitable for use with clean water and liquids that are not chemically aggressive towards the materials from which the pump is made. The high efficiency and adaptability of these pumps to even the most unusual of applications, makes them ideal for use in the domestic, civil and industrial sectors; in particular for the distribution of water in combination with pressure sets and for pressure boosting.

TECHNICAL DATA /*DATOS TiCNICOS*

60 Hz n=3450 1/min

MODEL *MODELO*	Power *Potencia*		US gpm	Q DELIVERY / *CAUDAL*																				DN
				0	5	H	13	16	19	21	24	26	29	32	37	42	48	53	58	63	69	74	79	
			IZmin	0	20	40	50	60	70	80	90	100	110	120	140	160	180	200	220	240	260	280	300	
	kw	hp	m*/h	0	1.2	2.4	3	3.6	4^	4.8	5.4	6	6.6	7J	8.4	9.6	10.8	12	13.2	14.4	15.6	16.8	18	mm
PV4x 4/1.5	1.1	1.5		52	49	46	44	41	39	37	33	30	27	23										
PV 4x€/2	1.5	2		77	74	69	66	63	58	55	50	45	40	34										
PV 4x8/3	22	3		104	99	92	88	84	78	73	66	60	53	45										
PV 4x10/4	3	4		129	124	116	110	104	97	91	83	75	66	57										
PV 4x13/5.5	4	5.5		168	161	150	143	136	126	119	108	97	86	74										
PV 4x16/7.5	5.5	7.5		206	198	185	177	167	156	146	133	119	106	91										25x25
PV6x 3/1.5	11	1.5		40				36	35	33	31	30	28	26	22	17								32x32
PV 6x5/2	1.5	2		66				60	58	55	52	50	47	43	36	28								
PV 6x7/3	22	3		92				85	81	78	73	70	66	61	51	40								
PV fix 9/4	3	4		119				109	104	100	94	90	84	78	65	51								
PV 6x12/5.5	4	5.5		159				145	139	133	125	120	113	104	87	68								
PV 6x16/7.5	5.5	7.5		197				180	173	165	156	150	140	130	108	85								
PV 8x4/2	1.5	2	H(m)	53						44	42	41	39	37	33	29	23	17	12					
PV8x«/3	22	3		79						66	64	61	59	56	50	44	35	26	18					
PV 8x8/4	3	4		105						88	85	82	78	74	66	58	46	34	24					
PV 8x10/5.5	4	5.5		132						110	106	102	98	93	83	73	58	43	30					
PV 8x13/7.5	5.5	7.5		171						143	138	133	127	121	108	95	75	56	39					
PV 8x 17/10	7.5	10		224						187	180	173	167	158	141	124	99	73	51					
PV 12x3/2	1.5	2		44								43	42	41	40	38	36	33	30	27	24	20	17	40x40
PV 12x4/3	22	3		59								58	57	55	53	50	48	44	40	36	32	27	23	50x50
PV 12x5/4	3	4		73								72	71	69	66	63	60	55	50	45	40	34	29	
PV 12x7/5.5	4	5.5		102								101	99	97	92	88	84	77	70	63	56	48	40	
PV 12x9/7.5	5.5	7.5		132								130	127	124	119	113	108	99	90	81	71	61	51	
PV 12x11/10	7.5	10		161								159	155	152	145	138	131	121	110	99	87	75	63	
PV 12x15/15	11	15		220								217	212	207	198	189	179	165	150	136	119	102	86	

MODEL *MODELO*	Power *Potencia*		US gpm	Q DELIVERY / *CAUDAL*									DN
				0	26	53	79	106	132	159	185	211	
			l/min	0	100	200	300	400	500	600	700	800	
	kw	hp	nrp/h	0	6	12	18	24	30	36	42	48	mm
PV 30x5/10	7.5	10		105	100	93	86	78	67	54	36	4	50x50
PV30x«/12	9.2	12.5	H(m)	126	120	112	103	94	80	65	44	5	65x65
PV 30x8/15	11	15		168	158	149	138	124	106	86	58	6	80x80

PERFORMANCE CURVE / *CURVAS DEFUNCIONAMIENTO*

60 Hz n=34501/min

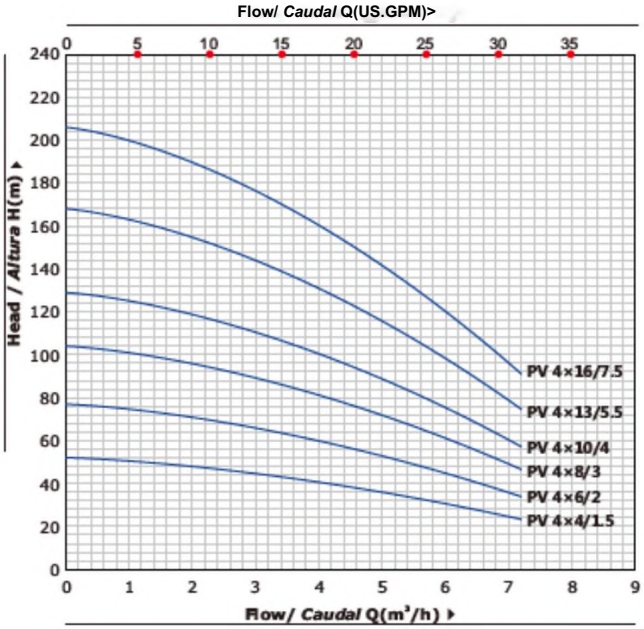

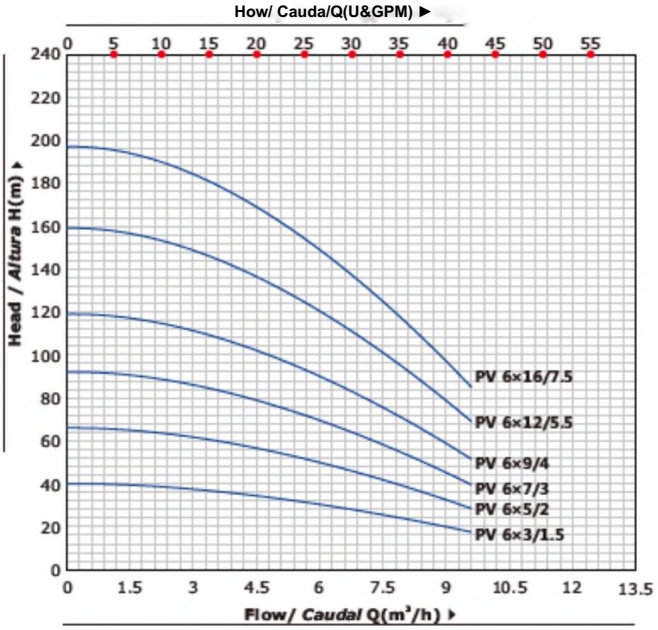

MATERIAL DESCRIPTION / *DESCRIPCIdN DE MATERIAL*

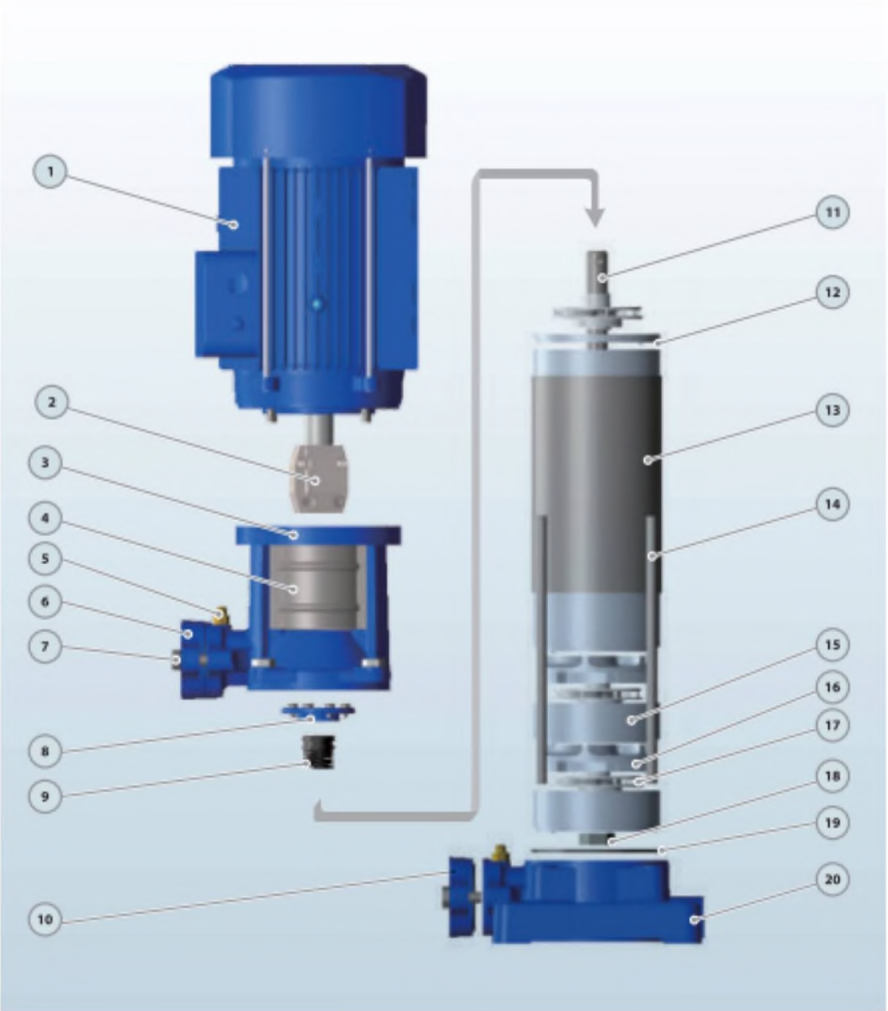

PERFORMANCE CURVE / *CURVAS DEFUNOONAMIENTO*

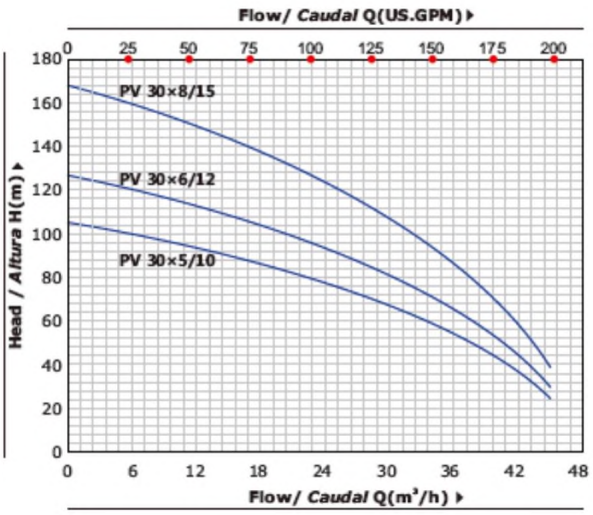

DIMENSIONS ANDWEIGHT/D/M£NS/ON£S y PESOS

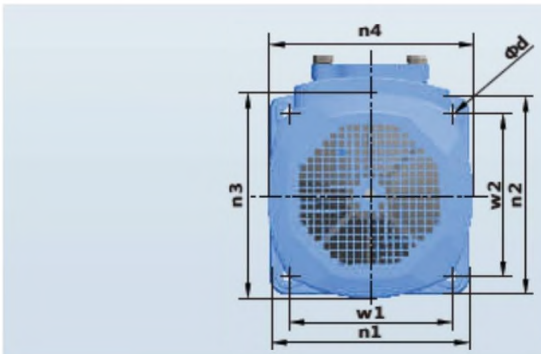

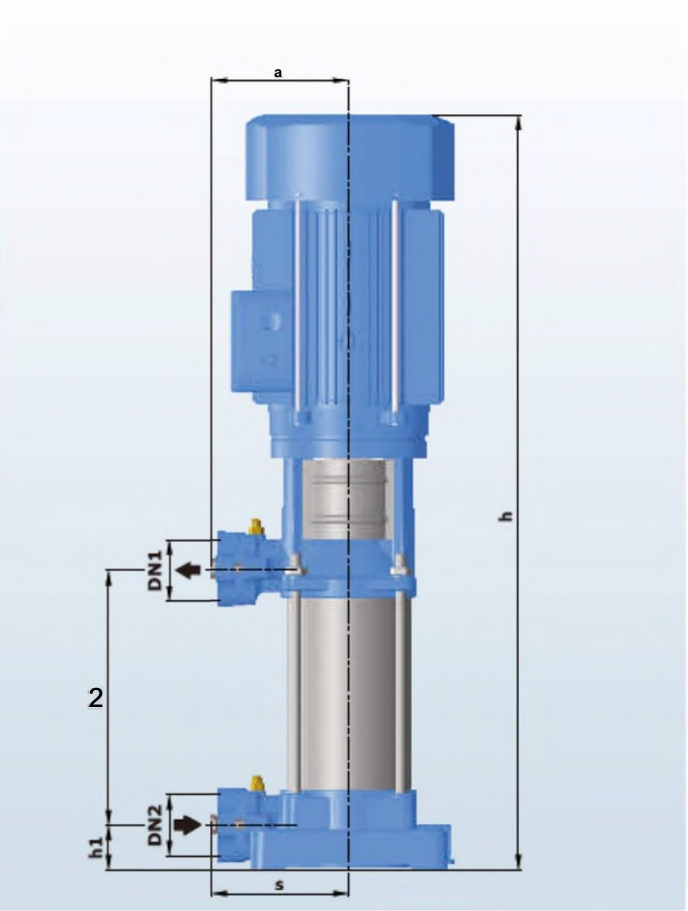

MODEL / MODELO		DIMENSIONS / *DIMENSIONES* mm															kg	
Single-phase Monofásico	Three-phase Trifásico	DN1	DN2	N	a	s	h hi K2 w1 w2 | n1						n2	n3 r>4 d			1~	3~
PV4x4/1.5	PV4x4/L5	25/32	25/32	4	141	141	615.5	45.5	156.5	165	165	202	202	175	175	| 12	27.0	26.0
PV 4x6/2	PV 4x6/2	25/32	25/32	6	141	141	685.5	45.5	226.5	165	165	202	202	175	175	if	3Z0	31.0
PV 4x8/3	PV 4x8/3	25/32	25/32	8	141	141	755.5	45.5	296.5	165	165	202	202	175	175	12	37.0	36.0
PV4X1Q/4	PV4xIQ/4	25/32	25^31	10	141	141	8725	45.5	366.5	165	165	202	202	195	195	12	47.0	46.0
-	PV 4x13/5.5	25/32	25/32	13	141	141	977.5	45.5	471.5	165	165	202	202	195	195	12	■	51.0
-	PV 4x16/7.5	25/32	25/32	16	141	141	11325	45.5	576.T	165	165	202	202	204	204	12	■	61.0
PV6x 3/1,5	PV6x3/L5	25/32	25/32	I-	141	141	580.5	45.5	121.5	165	165	202	302	175	175	12	26.0	25.0
FV 6x5/2	PV 6x5/2	25/32	2532	5	141	141	650.5	45.5	191.5	165	165	202	202	175	175	li	3L0	30.0
PV 6x7/3	PV 6x7/3	25/32	25/32	7	141	141	720.5	45.5	261.5	165	165	舶	202	175	175	□	36.0	35.0
PV 知9/4	PVSx，，感	25/32	25/32	9	141	141	837.5	45.5	331.5	165	165	202	202	195	195	12	46.0	45.0
-	PV 6x12/5.5	25/32	25/32	12-	141	141	942.5	45.5	436.5	165	165	202	202	195	195	12	-	50.0
-	PV6xI^7.5	25/32	25/32	16	141	141	11325	45.5	576.5	165	165	202	202	204 I 204 I if			■	60.0
PV 8x4/2	PV 8x4/2	40/50	40/50	4	141	141	615.5	45.5	1565	165	165	202	202	175	175	12	3 0.0	29. o
PV 8x€/3	PV 8x6/3	40/50	40/50	6	141	141	685.5	45.5	226.5	165	165	202	202	17(	175	12	3 5.0	34. o
PV 8x8/4	PV 8x8/4	40/50	40/50	8	141	141	8025 45.5 296.5			165	165	202	202	195	195	12	4 5.0	44. 49. o
-	PV 8xIQ/5.5	40/50	40/50	10	141	141	8725	45.5	366.5	165	165	202	202	195	195	12	-	S9. o
-	PV 8x13/7.5	40/50	40/50	13	141	141	1027.5	45.5	471.5	165	165	202	202	204	204	12	-	64. o
-	PV 8x17/10	40/50	40/50	17	141	141	11675	45.5	6115	165	165	202	202	2乂	204		-	o
PV12xV2	PV 12x3/2	40/50	40/50	3	141	141	580.5	45.5	121.5	165	I 16S I 202 I 202 I 175 | 17S I 12						2&0	27.0 o
PV 12x^3	PV12x^3^|40/50 40/50			4	141	141 61S5 453 1565 165					165	202	202	175	175	12	310	32.0
PV 12x5/4	RQ2x 5/4	40/50	40/50	5	141	141	697.5	45.5	191.5	165	165	202	202	195	195	12	4L0	40.0
-	PVllx^rSJ	40/50	40/50	7	MI	141	76Z5	455	趾5	兩	165	202	202	195	195	12	-	45.0
-	PV12x9jr7J	40^50	卜50	9	U1	141	887«5	4S»5	副5	祕	165	202	202	204	204	12	-	55.0
-	PVUxli/10	4(^504(^50		11	141	141	95Z5	45»5	4015	165	165	202 |	202	204	204	12	-	62.0
-	PV 12x15/15	40/50	40/50	15	141	141	1127.5	45.5	541.5	165	165	202	202	260	260	12	-	80.0
-	PV30x5/i❶	5(^655(^65		5	170	170	939	62	3的	187	187	230	230	260	260	12	•	84.0
-	PV 30x6/12	50/6550/65!		6	| 170 | 170		| 朔 |	62	|~362.5	187	I 1«7 I 230 I 230 I 260 I 260 I 12						-	90.0
-	PV 30x9/15	50/65 50/65! 8			| DO | 170 | HOP | 62 |4695| 187 | 187 | 230 | 230 | 260 | 260 | U												-	97.0

Multistage Jockey Pumps PV

PV Vertical Multistage Centrifugal Jockey Pump

- New vertical multistage centrifugal pump
- Original design by PURITY
- Both square motor & round motor available
- YE3 high efficient motor, with protection IP55 class F
- Pump case with anti-corrosive coating
- Impeller in techno-polimer
- Shaft in stainless steel AISI 304 or galvanized iron
- Suction and discharge port in cast iron G20 thread
- Quality NSK bearing, wear resistance mechanical seal

Product Specification (50HZ)

Product Description

PV Vertical Multistage Centrifugal Pump

TECHNICAL DESCRIPTION

New vertical multistage centrifugal pump
Original design by PURITY
Both square motor & round motor available

YE3 high efficient motor, with protection IP55 class F
Pump case with anti-corrosive coating
Impeller in techno-polimer
Shaft in stainless steel AISI 304 or galvanized iron
Suction and discharge port in cast iron G20 thread
Quality NSK bearing, wear resistance mechanical seal

APPLICATIONS

Suitable for use with clean water and liquids that are not chemically aggressive towards the materials from which the pump is made.
The high efficiency and adaptability of these pumps to even the most unusual of applications, makes them ideal for use in the domestic, civil and industrial sectors; in particular for the distribution of water in combination with pressure sets and for pressure boosting.

USING LIMITS

Liquid temperature between -10°C and +120°C
Ambient temperature up to +50°C
Max. working pressure 25 bar
Continuous service S1

TECHNICAL DATA 50Hz n=2900 1/min

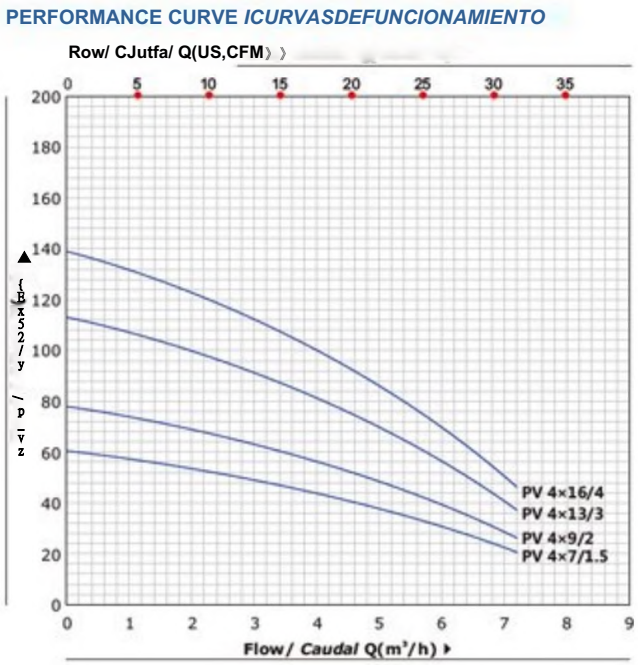

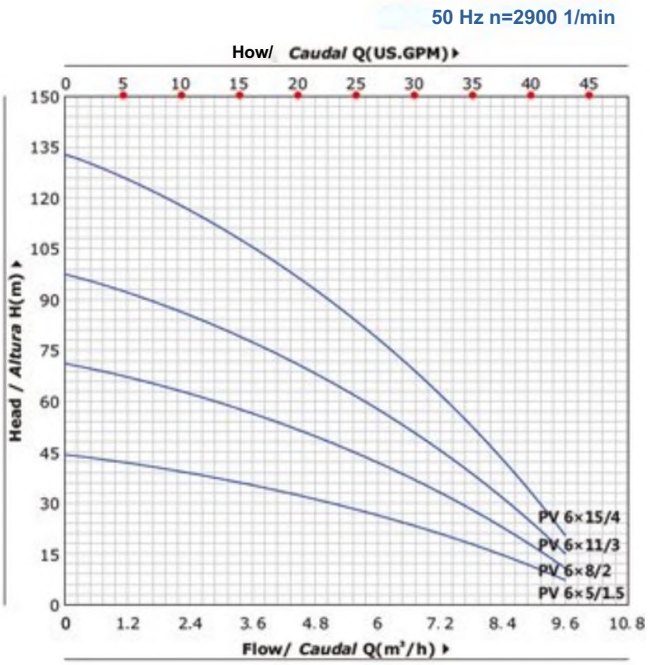

PERFORMANCE CURVE / *CURVAS DE FUNCIONAMIENTO*

50 Hz n=2900 1/min

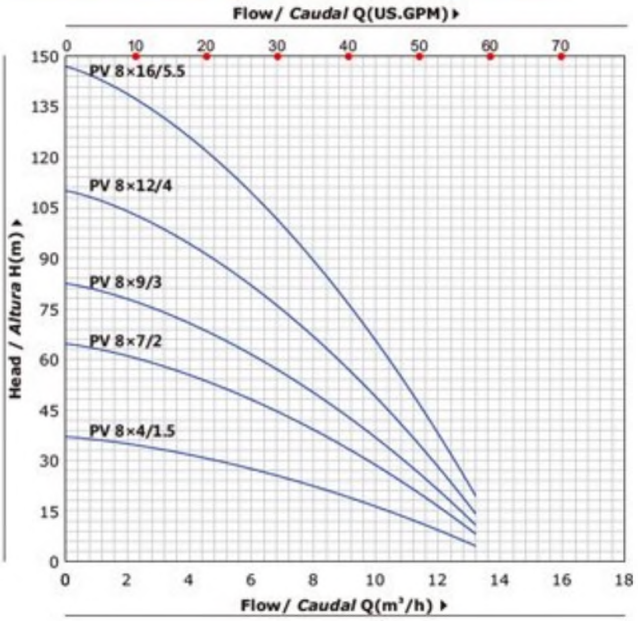

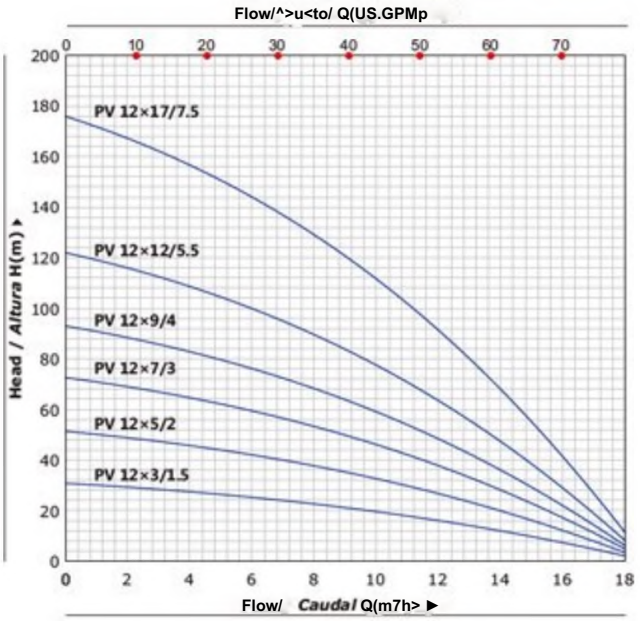

Product Description

PV Vertical Multistage Centrifugal Pump

TECHNICAL DESCRIPTION

New vertical multistage centrifugal pump
Original design by PURITY
Both square motor & round motor available
YE3 high efficient motor, with protection IP55 class F
Pump case with anti-corrosive coating
Impeller in techno-polimer
Shaft in stainless steel AISI 304 or galvanized iron
Suction and discharge port in cast iron G20 thread
Quality NSK bearing, wear resistance mechanical seal

APPLICATIONS

Suitable for use with clean water and liquids that are not chemically aggressive towards the materials from which the pump is made.
The high efficiency and adaptability of these pumps to even the most unusual of applications, makes them ideal for use in the domestic,

civil and industrial sectors; in particular for the distribution of water in combination with pressure sets and for pressure boosting.

USING LIMITS

Liquid temperature between -10°C and +120°C
Ambient temperature up to +50°C
Max. working pressure 25 bar
Continuous service S1

TECHNICAL DATA 50Hz n=2900 1/min

TECHNICAL DATA / *DATOS T(CNICOS* **50 Hz n=29001/min**

MODEL *MODELO*	Power *Pntanrijt*		US gpm	0	5	11	13	16	19	21	24	26	29	32	37	42	48	53	58	63	69	74	79	DN
				Q=DELIVERY / *CAUDAL*																				
			Mm in	0	20	40	50	60	70	80	90	100	110	120	140	160	180	200	220	240	260	280	300	
	kw	hp	m³/h	0	1.2	2.4	3	3.6	42	4.8	5.4	6	6.6	7.2	8.4	9.6	10.8	12	13.2	14.4	15.6	16.8	18	mm
PV4x7/1.5	1.1	1.5		60.7	56.8	52.1	49	45.9	42.8	38.9	35	303	25.7	20.2										25x25
PV 4x9/2	1.5	2		78	73	67	63	59	55	SO	45	39	33	26										25x25
PV 4x13/3	2.2	3		113	105	96.8	91	85.2	79.4	72.2	65	56.3	47.7	37.5										25x25
PV 4x16/4	3	4		139	130	119	112	105	97.8	88.9	80	693	58.7	46.2										25x25
PV6x 5/1.5	1.1	1.5		44.4				135.5	33.3	30.9	28.4	26.1	23.4	20.2	14.3	6.8								32x32
PV 6x8/2	I.S	2		71.1				56.7	53.2	49.5	45.5	41.8	37.5	32.4	22.9	10.9								32x32
PV 6x11/3	2.2	3		97.7				78	73.2	68	62.5	57.5	51.5	44.5	31.5	15								32x32
PV 6x15/4	3	4		133				106	99.8	92.7	85.2	78.4	70.2	60.7	43	20.5								32x32
PV8x4/1-5	1.1	1.5		36.8						30	28.4	27.2	26	24.4	21.2	17.6	132	9.2	4,8					40x40
PV 8x7/2	1.5	2	H(m)	64.4						52.5	49.7	47.6	45.5	42.7	37.1	30.8	23.1	16.1	8.4					40x40
PV 8x9/3	2.2	3		82.8						67.5	63.9	61.2	58.5	54.9	47.7	39.6	29.7	20.7	10.8					40x40
PV 8x12/4	3	4		110						90	8S.2	81.6	78	73.2	63.6	52.8	39J6	27.6	14.4					40x40
PV 8x16/5.5	4	5.5		147						120	114	109	104	97.6	84.8	70.4	523	36.8	19.2					40x40
PV 12x3/1.5	1.1	1.5		31								25.4	24.7	24	22.4	20.6	18.4	16.2	13.3	10.9	83	5.1	2	50x50
PV 12x5/2	1.5	2		51.7								42.4	41.2	40	37.3	34.3	30.7	27	22.2	18.2	13.8	8.5	33	50x50
PV 12x7/3	2.2	3		72.3								593	57.6	56	52.3	48.1	43	37.8	31	25.5	19.4	11.9	4.7	50x50
PV 12x9/4	3	4		93								76.2	74.1	72	67.2	61.8	552	48.6	39.9	32.8	24.9	15.4	6	50x50
PV 12x12/5.5	4	5.5		122								102	98.8	96	89.6	82.4	73.6	64.8	53.2	43.8	33.2	20.5	8	50x50
PV 12x17/75	5.5	7.5		176								144	140	136	127	117	104	91.8	75.4	62	47	29	11.3	50x50

MODEL *MODELO*	Power *Potencia*		us 卯m	0	26	S3	79	ioe	132	159	185	211	DN
				Q=DELIVERY / *CAUDAL*									
			1/min	0	100	200	300	400	500	600	700	800	
	kw	hp	rrP/h	0	6	12	18	24	昶	X	42	43	mm
PV 30x7/10	7.5	10		104	100	93	83	74	64	49	31	4	50x50
PV 30x9/12	9.2	1Z5	H(m)	133	128	119	108	96	82	63	40	S	65x65
PV 30*11/15	11	15		163	156	145	132	116	99	77	48	6	

PERFORMANCE CURVE / *CURVAS DEFUNCIONAMIENTO*

50 Hz n=29001/min

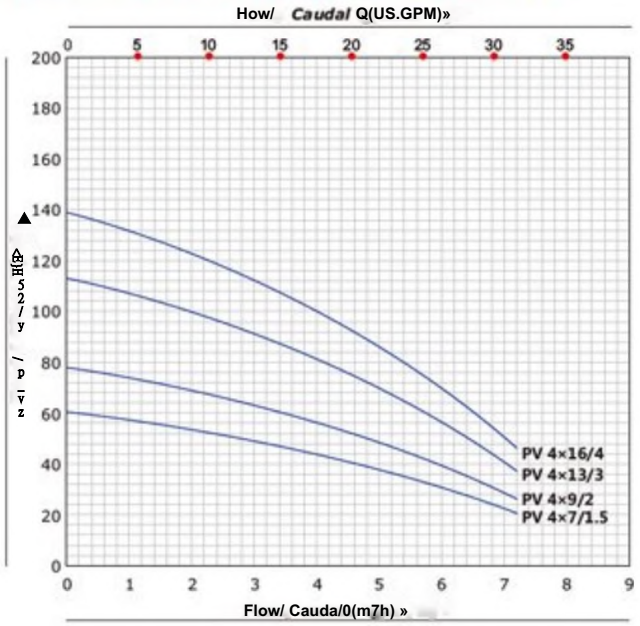

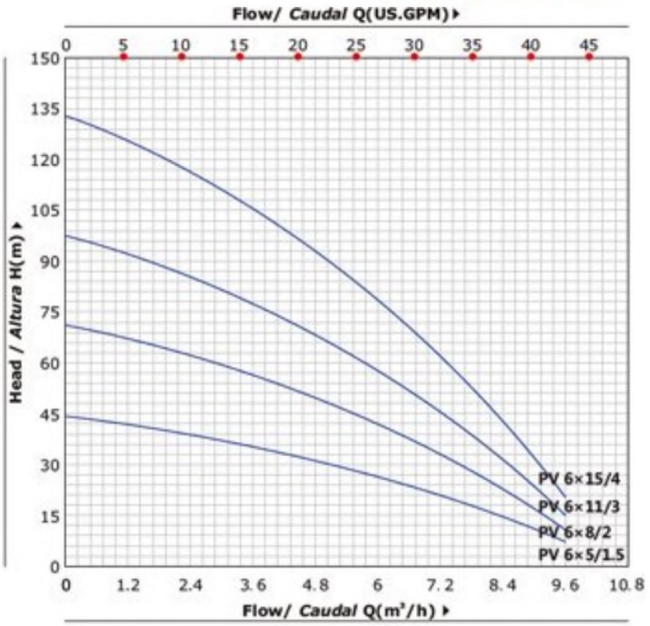

PERFORMANCE CURVE / *CURVAS DE FUNCIONAMIENTO*

50 Hz n=2900 1/min

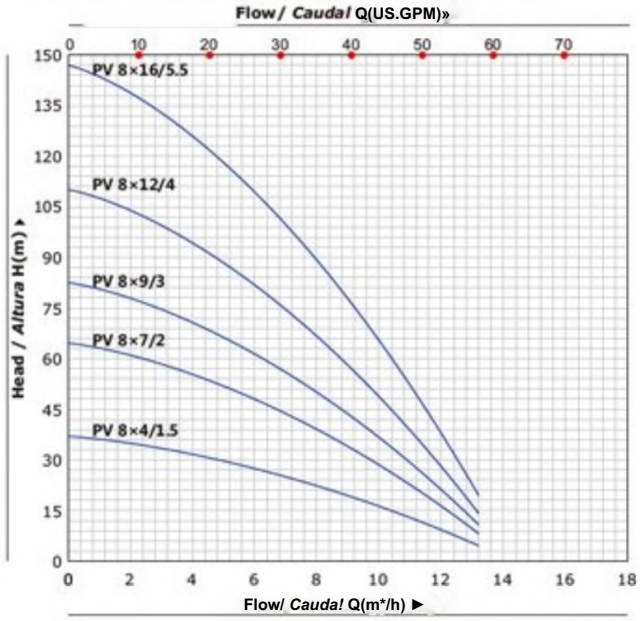

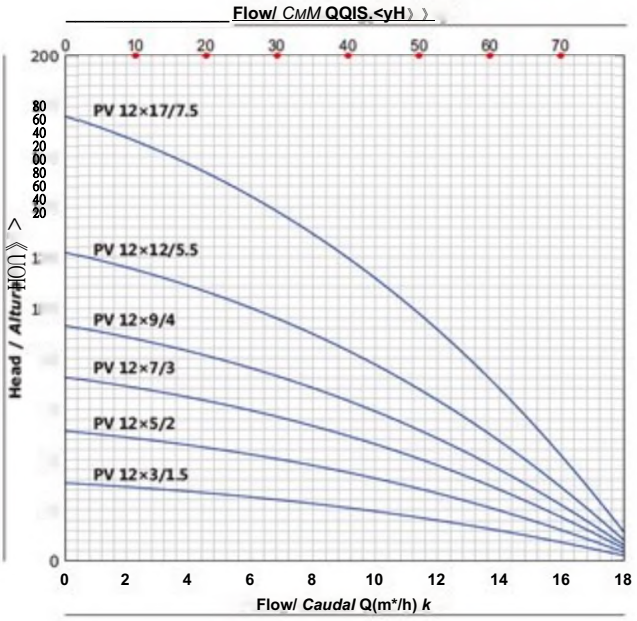

MATERIAL DESCRIPTION / *DESCRIPCI6N DE MATERIAL*

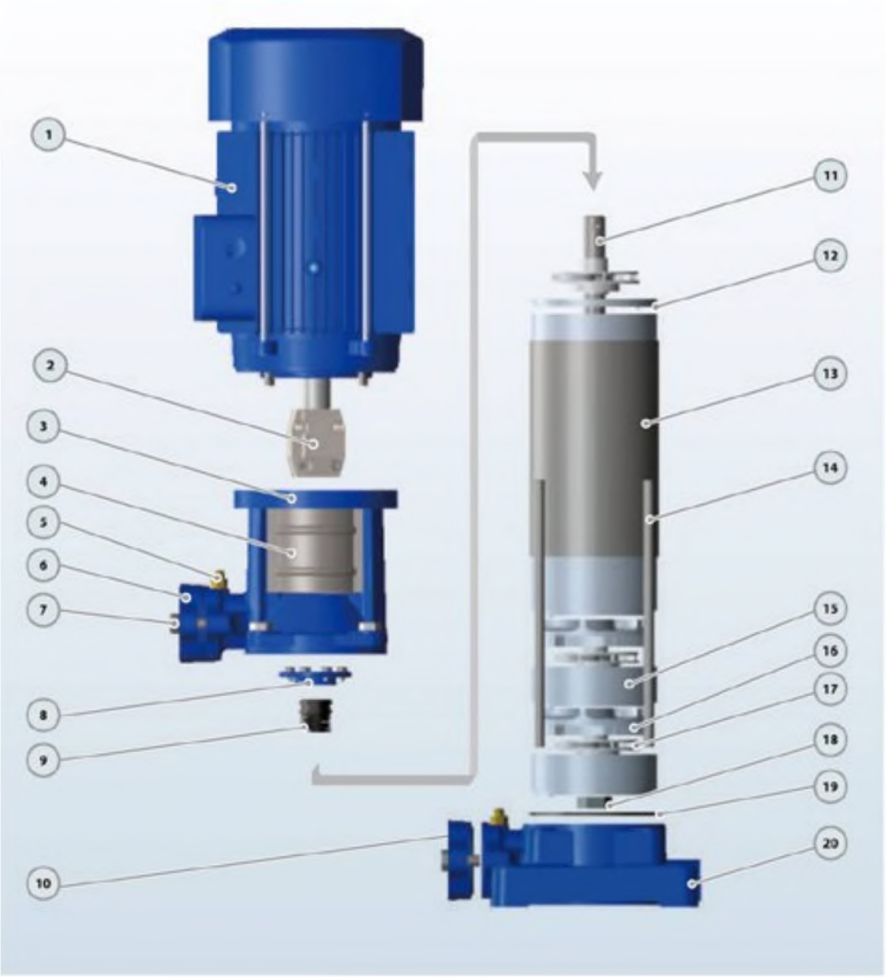

No.	Description *Descripcion*	Material *Material*
1	**Motor** *Motor*	**IP55 Class F** *IP5S Close F*
2	**Coupfng Un/On**	**Iron** *Hierro*
3	**Discharge Body** *Cuerpo tmpuisibfi*	**Cast iron** *Fundicion*
4	**Cover** *Tapa*	**SS304** *的ox 304*
S	**Release Vahre** *Tap6n C&b&do*	**Brass** *Bronco*
b	**Discharge** *Impuisidn*	**Cast iron** *Fundtcion*
7	**Bolt** *P&rno*	**Sted** *Ac^ro*
8	**Seal Cover** **Tapa Qerre**	**Cast iron** *FundM^n*
9	**Mechanical Soai** *Cierre Mec^nico*	**SiGCarbon/SS304** *SiC~Grafik>-Inox304*
10	**Suction** *Aspiracidn*	**Cast iron** *Fundici6r*
11	**Pump Shaft** *Eje*	**SS304/45# Iren** *Inox 304/45H hierro*
12	**Diffuser Top Cover** *Tope Tops Difusor*	**Tecnncpolmer** *Tecnopdimero*
13	**Punp Cover** *Tapa Bemba*	**SS304** *Inox 304*
14	**Through Bolt** *Porno*	**Steel** *Aceio*
-	**Dffuser Cover** *Tapa Dfusof*	**Technopofanefth SS3O4 mg** *iGcmpobnsm con Inox anHo*
16	**Dffuser** *Difusor*	**T0Chnopoimefw<hSS3O4rtr)g** *Tecnopoltmero con Inox onifo*
17	**impeler** *Impulsor*	**Techncpolmer** *TecnopoHmero*
18	**Impel er Nut** *Tuefca de fmputsor*	**Galvanizated Sleel** *Aeon Gclvanizodo*
19	**O-nn(j** *Junta TMca*	**Rubber** *Caucho*
20	**Sucbon Body** *Cuerpo Asptnd&i*	**Cast iron** *Fundtcidn*

PERFORMANCE CURVE / *CURVAS DEFUNCIONAMIENTO*

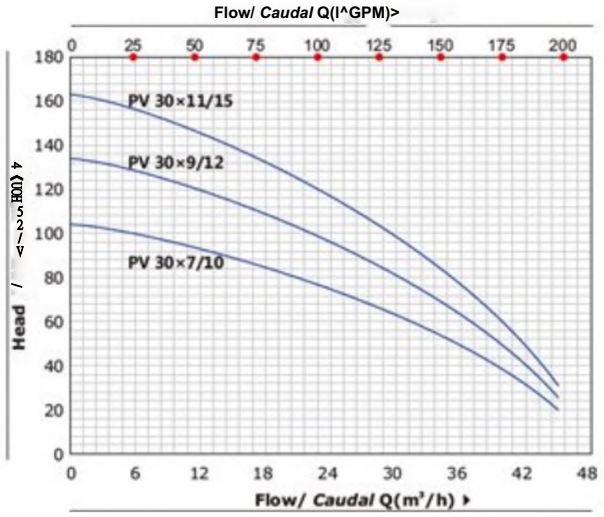

DIMENSIONS AND WEIGHT / *DIMENSIONS Y PESOS*

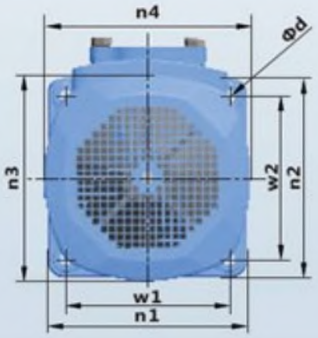

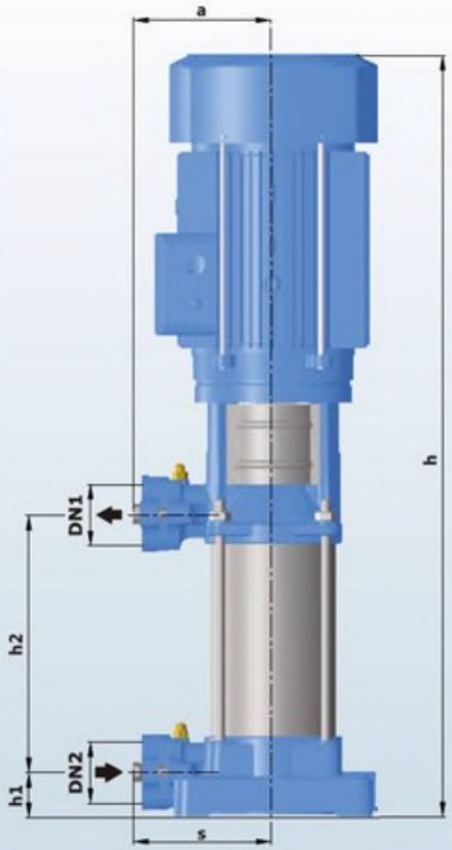

MODEL *MODELO*	DIMENSIONS / *DIMENSIONES* mm															kg	
	DN1	DN2	N	a	s	h	hi	h2	wl	w2	n1	n2	n3	n4	d	1-	3-
PV4x7/1.5	25/32	25/32	7	141	141	720	4S.S	261.5	165	16S	202	202	175	ns	12	28.0	27.0
PV 4x9/2	25/32	25/32	9	141	141	790	45.5	331.5	16S	165	202	202	175	175	12	33.0	32.0
PV 4x13/3	25/32	«/32	B	141	141	930	4S.S	471.5	16S	165	202	202	175	175	12	38.0	37.0
PV 4x16/4	25/32	25/32	16	141	141	1082	45.5	576.5	16S	165	202	202	195	19S	12	48.0	47.0
PV6x5/1.5	25/32	25/32	5	141	141	650	4S.S	191.S	165	165	202	202	175	175	12	26.0	2S.0
PV 6x8/2	25/32	25/32	8	141	141	755	45.5	296.5	16S	165	202	202	175	175	12	31.0	30.0
PV 6x11/3	25/32	25/32	11	141	141	860	45.5	401.5	165	165	202	202	175	175	12	36.0	35.0
PV 6x15/4	25/32	25/32	IS	141	141	1047	45.5	S41.5	16S	165	202	202	195	195	12	46.0	4S.0
PV8x4/1.5	40/50	40/50	4	141	141	615	4S.5	156.5	165	165	202	202	175	175	12	26.0	25.0
PV 8x7/2	40/50	40/50	7	141	141	720	45.5	261.5	16S	165	202	202	175	175	12	31.0	30.0
PV 8x9/3	40/50	40/50	9	141	141	790	4S.S	331.5	16S	16S	202	202	17S	17S	12	36.0	3S.0
PV 8x12/4	40/50	40/50	12	141	141	942	45.5	436.5	165	16S	202	202	195	195	12	46.0	4S.0
PV 8x16/5.5	40/50	40/50	16	141	141	1082	45.S	576.5	165	165	202	202	195	195	12	-	50.0
PV 12x3/L5	40/50	40/50	3	141	141	580	45.5	121.5	165	16S	202	202	175	175	12	25.0	24.0
PV 12x5/2	40/50	40/50	5	141	141	650	45.S	191.S	165	16S	202	202	175	17S	12	30.0	29.0
PV 12x7/3	40/50	40/50	7	141	141	720	45.5	261.5	165	16S	202	202	175	175	12	35.0	34.0
PV 12x9/4	40/50	40/50	9	141	141	837	45.5	331.5	165	165	202	202	195	195	12	45.0	44.0
PV 12x12/5.5	40/50	40/50	12	141	141	942	45.5	4J6.5	165	16S	202	202	195	195	12	-	50.0
PV 12x17/7.5	40/50	40/50	17	141	141	1167	45.5	611.5	16S	16S	202	202	204	204	12	-	60.0
PV 30x7/10	50/65	50/65	7	170	170	1046	62	416	187	187	230	230	260	260	12	-	86.0
PV 30x9/12	50/65	50/65	9	170	170	11S3	62	523	187	187	230	230	260	260	12	-	92.0
PV 30xII/IS	50/65	50/65	n	170	170	1260	62	630	187	187	230	230	260	260	12	-	100

Multistage Jockey Pumps CDLF

[CDLFJStainless Steel Multistage Centrifugal Pump Vertical Industrial Water Pump Manufacturers

CDL/ CDLF is a kind of multifunctional products.It can be used to convey various medium from tap waterto industrial liquid

at different temperature and with di-fferent flow rate and pressure. CDL type is applicable toconveying non-corrosive liquid,

while CDLF is suitablefor slightly corrosive liquid.

Thin, clean, non-flammable and non-explosive liquidcontaining no solid granules and fibers.

• Liquid temperature:

Normal temperature type: -I5C ～+70'C，

Hot water type:-15C~+120C

•Ambient temperature: up to +40C.

•Altitude:up to 1000m

vertical Multistage Pump

Technical Data
Lift range:1-21BAR
Flow range:2m^3/h

ADVANTAGES

Eight Characteristics

Energy-saving Certificate

Large Flow Capacity

YE3 Motor IP55 ClassF All Copper Wire

Stainless Steel 304 Impeller & Shaft

Anti-corrosive Coating

NSK Bearing

Costormized Sizes & Pumps

Good Quality & Service 2-Years Guarantee

PRODUCT INFORMATION

CDL/ CDLF is a kind of multifunctional products.lt can be used to convey various medium from tap waterto
industrial liquid at different temperature and with di-fferent flow rate and pressure.
CDL type is applicable

toconveying non-corrosive liquid, while CDLF is suitablefor slightly corrosive liquid.
•Water supply: Water filter and transport in Waterworks, boosting of main pipeline, boosting in high-rise buildings.
•Industrial boosting: Process flow water system, cleaning system, high-pressure washing system, fire fightingsystem.
•Industrial liquid conveying: Cooling and air-conditioning system, boiler water supply and condensing system,.machine-associated purpose, acids and alkali.
•Water treatment: Ultrafiltration system, reverse osmosis system, istillation system, separator, swimming pool.
•Irrigation: Farmland irgation, spray irrigation, dripping irrigation.

Thin, clean, non-flammable and non-explosive liquidcontaining no solid granules and fibers.
•Liquid temperature:
Normal temperature type: -I5C ~+70'C,
Hot water type:-15C*+120C
•Ambient temperature: up to +40C.
•Altitude:up to 1000m

•Full-enclosed air -blast two-pole standard motor
•Protection class: 1P55
• Insulation class: F
•Standard voltage:50Hz: 1 x 220-230/ 240V
3 x 200-220/ 346-380V
3 x 220-240/ 380-415V
3 x 380-415V

參 Definition of Model

CDL/CDLF1,2,3,4,5,8,10,12,15,16 and 20

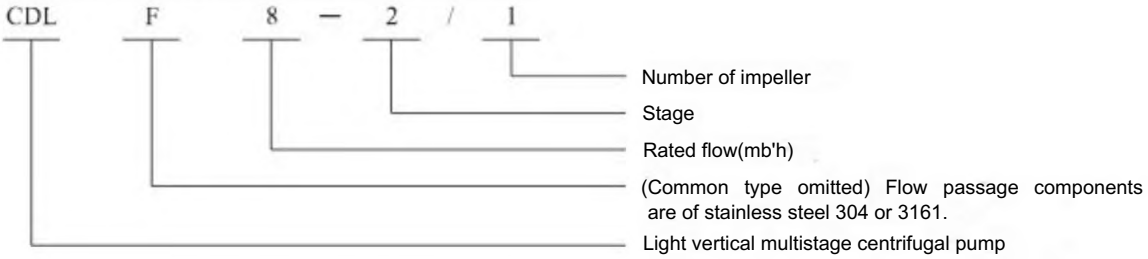

CDL/CDLF32,42,65.85,120 and 150

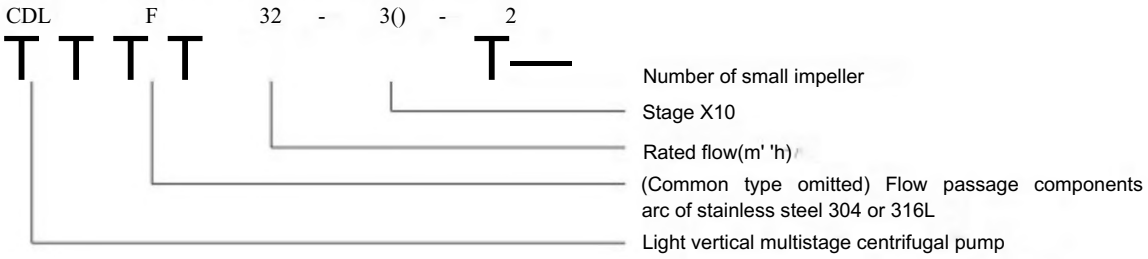

CDL/CDLF200

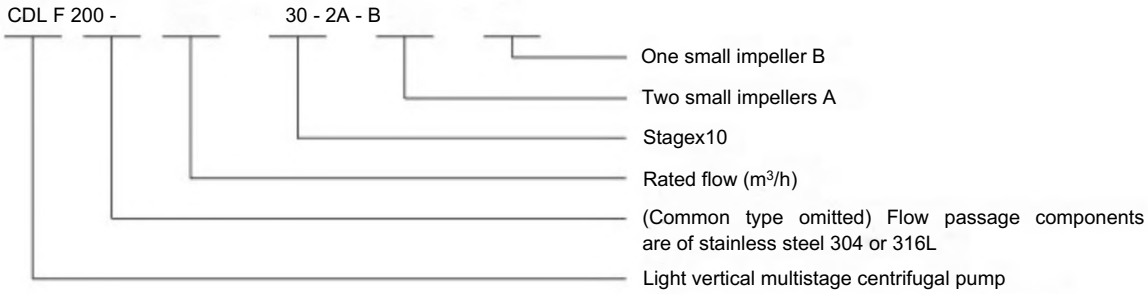

• Max working pressure

Model	Max. pivssurdbar)
CDLl,23A5Flangc	25
CDL(F) 1.23.4,5 Cher F lange	16
CDLFI ,23.4.5 Flangc^culting ferrule joint,pipe thread	25
CDL3J0J2J5.16J0 Flange	25
CDL(F)8 Over Flange	16
CDLFK10,12,15,16J0 Flange.cutting fcmile joint.pipe thread	25
CDL32	
32-IO-I-32-8O 32-90-2-32-160	16(30) 30
CDLF32	30
CDL42	
42-10-1^42-60-2 42-60-42-90 42-100-2-42-130-2	16(30) 25(30) 30
CDLF42	
42-10-1-42-90 42-100-2-42-130-2	25(30) 30
CDL65	
65-10-1-65-50-2 65-50-1-65-80-1	16(25) 25
CDL85	
85-10-1^85-40-2 85-40-A5-60	16(25) 25
CDLF65,K5	25
CDUCDLFI20J 50,200	20

Pumps with pressure inside brackets need to specify especially.

• Max. Ambient temperature

When the pump operates under ambient temperature higher than 40*C or under altitude higher than 1000m, because of low air density and poor cooling effects, the motor output power P2 will be decreased to certain extent. If the pump is operated under the above-said conditions, il should be equipped with motor of higher power.

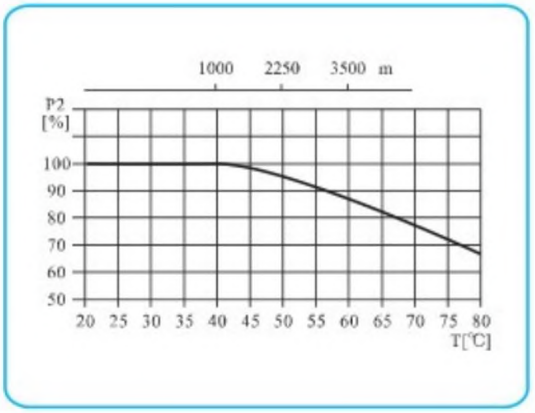

- **Performance scope**

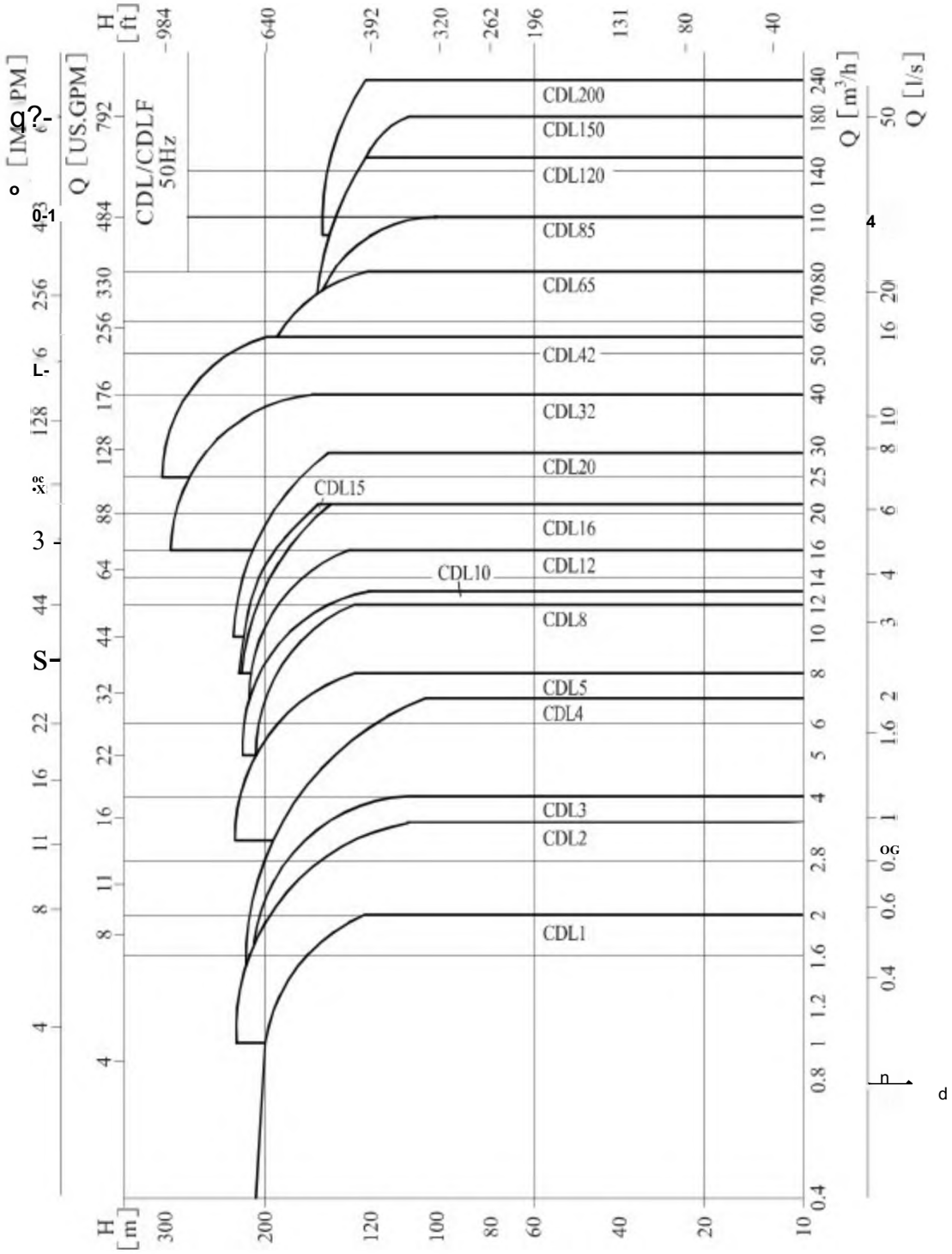

• Product range

Dctcnpoaa	CDLI	CDU	CDU	C1M.4	CDL5	CPU	CVL10	CIH.I2	C1M.1S	CIXJ6	CIMJO	CDU2	CDL42	CDL65	(DUS	"MJX>	(DU 50	CDL200
IU<e flow[m³/h]	1	2	3	4	S	s	10	12	IS	16	20	)2	42	65	S$	120	ISO	200
Rmc flow[U/s]	0.2R	056	O.M	l.l	1.39	22	2.7»	3J	4.1?	44	5.fr	建，	117	IK	w	35	41 >	55*
now ra^ni'hl	0L4.2	l>J.S	1.2-1	13.7	3-8	5.12	$*IJ	7.|6	M-22	*•22	ID-2X	16-40	2S-5S	IO.MO	50-110	60-150	80-180	IOIK24O
flow nMfdU]	• II4M6	o^wi»r	0.W-1.I	04 : 1 9	0.83-2.22	1.4-3.3	1.4-3.61	1 944	2.2 Al	12*. ,	2.«7.«4.本	III	69 -15.3	M 1 22 2	13.8-30.5	K7-4I 7	22-SO	2T.U661
MAX prvMMr«HhM]	21	23	22	21	2>	21	22	22	22	22	21	29	30	22	1?	16	16	16
Motor pcm erf kW]	oj , .ri	OJ , .J	0.37-3	037-4	or.55	W5	0 <5-7.2	1.5*11	1.1.15	2J-IS	1 1.185	1.5-30	?U-45	4CM5	”《45	11.75	11.73	IHMI ●
lan^'C]	-15~+120																	
MAXxflk«w>(%]	44	46	M	57	64	62	68	63	70	66	69	*n*	75	?6	*n*	74	73	*T9*
Type																		
cot	參	拳	●	●	●	●	參	●	●	參	●	●	●	參	●	參	●	●
CDLF	參	●	參	●	●	拳	●	●	●	●	●	●	●	●	●	●	●	●
<I>L P<*iinr<																		
DINFlMi«e	DN25	DN2S	DN25	DN32	DNJ2	DS4O	DN4O	DNM»	DM5O	DN5O	DN50	DK6S	DNRO	DKt«»	D ` k«i	DNI25	DNI25	DKISO
Oval Fian|^	*QI*	G1	Gl	01%	G1*4	OIK	Gl%											
COLT PipcliKa																		
DINFlaocc	DN25	DN25	DN25	DN32	DN32	DM0	DN-W	DN50	DX50	DN50	DN50	DW	DN»0	DNIOO	DM00	DN125	DNI25	DN150
CMmf fcvmk joint	DNJ2	IW32	DN32	DN32	DMJ2	DK50	DN50	DN50	DV50	DN50	DN50							
Pipe thread	ZGI%	zur.	ZGI%	zum	ZGI^	ZG2	ZG2	ZG2	ZG2	ZG2	ZU2							
Oval»taft||c	Gl	Gl	Gl	*GV4*	Gl%	Gl^	Gl%											

參 Performance table

Model	Driving motor (kW)	Driving motor (hp>	Q (m³/h)	0.4	0.6	0.8	1.0	1.2	1.4	1.6	1.8	2.0
CDLl-2	0.37	0.5		B	12.5	12	11.5	II	10.5	10	9.5	9
CDLI-3	0.37	0.5		19	18	IZ5	17	16.5	16	15	14	12
CDl.M	0.37	0.5		24	23.5	23	22.5	21.5	21	19	19	16
CDLI-5	0.37	0.5		30	29.6	29	28	27	26	24	22	20
CDLI-6	037	0.5		36	355	35	33.5	33	31	2R	26	23
CDL1-7	0.37	0.5		42	4垂	40.5	39	38	36	33	30	27
CDL1-8	0.55	0.75		48	47	46	45	43	41	38	34	30
OL1-9	0.55	0.75		54	53	52	51	4<)	46	43	39	33
CDL1-10	0.55	0.75		60	59	58	57	54	51	4X	43	36
CDI.I-ll	0.55	0.75		66	65	63	61	59	56	52	47	40
CDLI-12	0.75	1	H	72	71	69	67	64	61	57	51	44
CDLI-B	0.75	1	(m)	78	77	75	73	69	66	62	55	47
CDL1-15	0.75	1		R9	期	86	M	79	76	n	63	55
CDL1-17	LI	1.5		101	99	97	95	89	86	80	71	62
CDIJ-W	14	1.5		IB	no	108	106	99	丸	89	79	69
CDL1-21	14	1.5		124	122	120	117	110	106	9H	87	75
CDLI-23	1.l	15		137	133	131	128	121	116	107	96	82
CDLI-25	1.5	2		149	145	143	139	131	126	116	104	89
CDLI-27	1.5	2		161	157	155	150	141	136	125	112	95
CDLI-30	1.5	2		178	175	171	166	157	150	139	124	106
CDL1-33	2.2	3		196	192	1K8	1X3	173	165	154	137	11S
CDLI-36	2.2	3		214	210	205	200	190	1RI	169	151	130

參 Installation sketch

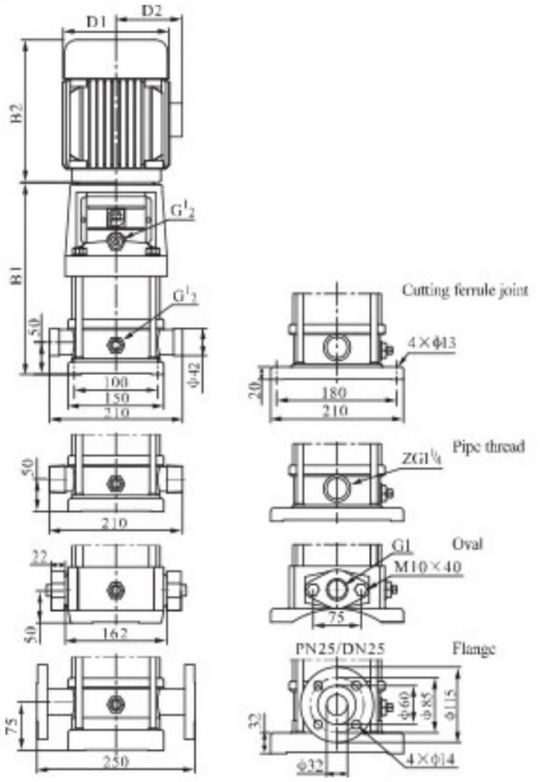

• Size and weight

Model	Size (mm) B1	B2	B1+B2	D1	D2	Weight (kg)
CDLI-2	258	225	4X3	I4K	117	20
CDLI-3	276	225	501	I卟	117	20
CDLI-4	294	225	519	148	117	21
CDLI-5	312	225	537	I4K	II7	21
CLJLI-6	330	225	555	1邪	ir	22
CDLI-7	548	225	~573~	148	Ti7	23
CDLI-8	366	225	591	M8	Ti7	24
CDLI-9	384	225	609	I4K	117	25
CDLI-10	402	225	627	U8	117	26
CDLI-11	420	225	645	148	TF	26
CDLI-12	448	245	693	170	142	29
CDLI-13	466	245	711	no	M2	Jo
CDLI-15	502	245	747	170	U2	5T
CDLI-17	538	245	783	J70	142	33
<DL -19	574	245	819	rro	J42	34
CDLI-21	610	245	855	no	M2	35
CDLI-23	f»46	245	891	170	142	36
CDLI-25	692	290	9打	190	J55	42
CDLI 互	728	290	1018	190	J55	43
CDLI-30	7«2	290	1072	J90	155	45
CDLI-33	836	290	1126	190	1^	49
CDLI-36	890	290	1180	Too	155	IF

CDLI-25 -)-36 sub-connrclion of pipeline has no ovul flange connection.

Ihc overall dimensions of the single-phase motor and explosion-proof motor arc a little different. Pls contact us for details.

vertical Multistage Pump

Technical Data
Lift range:1-21BAR
Flow range:2m^3/h

ADVANTAGES

Eight Characteristics

Energy-saving Certificate

Large Flow Capacity

YE3 Motor IP55 ClassF All Copper Wire

Stainless Steel 304 Impeller & Shaft

Anti-corrosive Coating

NSK Bearing

Costormized Sizes & Pumps

Good Quality & Service 2-Years Guarantee

PRODUCT INFORMATION

CDL/ CDLF is a kind of multifunctional products.lt can be used to convey various medium from tap waterto
industrial liquid at different temperature and with di-fferent flow rate and pressure.
CDL type is applicable

toconveying non-corrosive liquid, while CDLF is suitablefor slightly corrosive liquid.
•Water supply: Water filter and transport in Waterworks, boosting of main pipeline, boosting in high-rise buildings.
•Industrial boosting: Process flow water system, cleaning system, high-pressure washing system, fire fightingsystem.
•Industrial liquid conveying: Cooling and air-conditioning system, boiler water supply and condensing system,.machine-associated purpose, acids and alkali.
•Water treatment: Ultrafiltration system, reverse osmosis system, istillation system, separator, swimming pool.
•Irrigation: Farmland irgation, spray irrigation, dripping irrigation.

Thin, clean, non-flammable and non-explosive liquidcontaining no solid granules and fibers.
•Liquid temperature:
Normal temperature type: -I5C ~+70'C,
Hot water type:-15C*+120C
•Ambient temperature: up to +40C.
•Altitude:up to 1000m

•Full-enclosed air -blast two-pole standard motor
•Protection class: 1P55
• Insulation class: F
•Standard voltage:50Hz: 1 x 220-230/ 240V
3 x 200-220/ 346-380V
3 x 220-240/ 380-415V
3 x 380-415V

參 Definition of Model

CDL/CDLF1,2,3,4,5,8,10,12,15,16 and 20

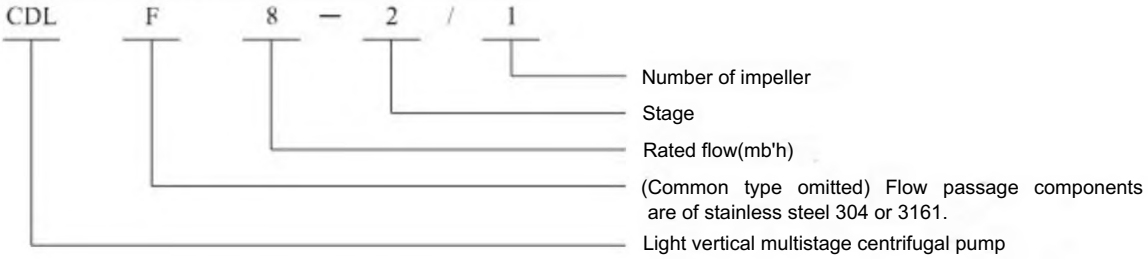

CDL/CDLF32,42,65.85,120 and 150

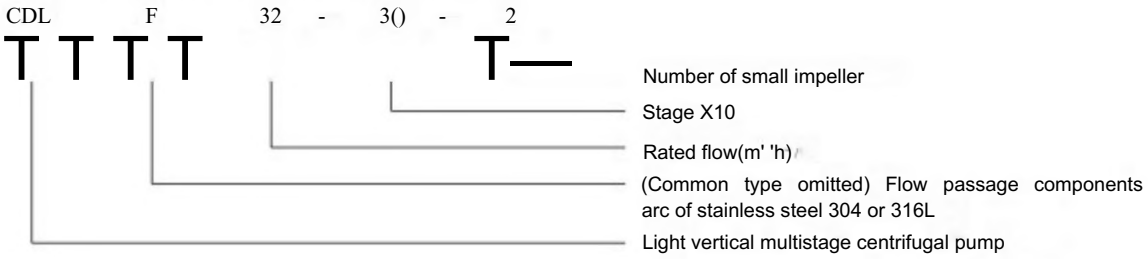

CDL/CDLF200

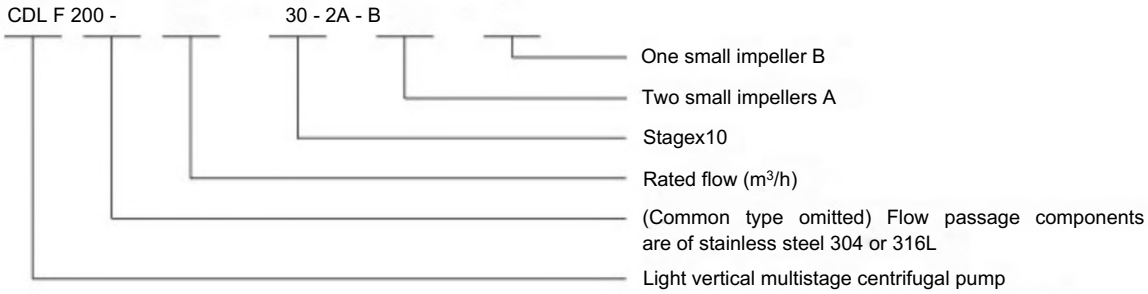

• Max working pressure

Model	Max. pivssurdbar)
CDLl,23A5Flangc	25
CDL(F) 1.23.4,5 Cher F lange	16
CDLFI ,23.4.5 Flangc^culting ferrule joint,pipe thread	25
CDL3J0J2J5.16J0 Flange	25
CDL(F)8 Over Flange	16
CDLFK10,12,15,16J0 Flange.cutting fcmile joint.pipe thread	25
CDL32	
32-IO-I-32-8O 32-90-2-32-160	16(30) 30
CDLF32	30
CDL42	
42-10-1^42-60-2 42-60-42-90 42-100-2-42-130-2	16(30) 25(30) 30
CDLF42	
42-10-1-42-90 42-100-2-42-130-2	25(30) 30
CDL65	
65-10-1-65-50-2 65-50-1-65-80-1	16(25) 25
CDL85	
85-10-1^85-40-2 85-40-A5-60	16(25) 25
CDLF65,K5	25
CDUCDLFI20J 50,200	20

Pumps with pressure inside brackets need to specify especially.

• Max. Ambient temperature

When the pump operates under ambient temperature higher than 40*C or under altitude higher than 1000m, because of low air density and poor cooling effects, the motor output power P2 will be decreased to certain extent. If the pump is operated under the above-said conditions, il should be equipped with motor of higher power.

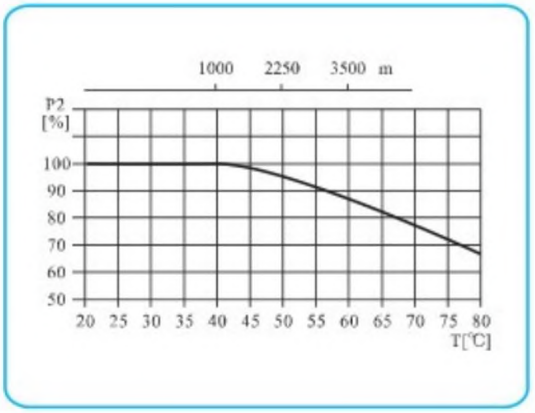

- **Performance scope**

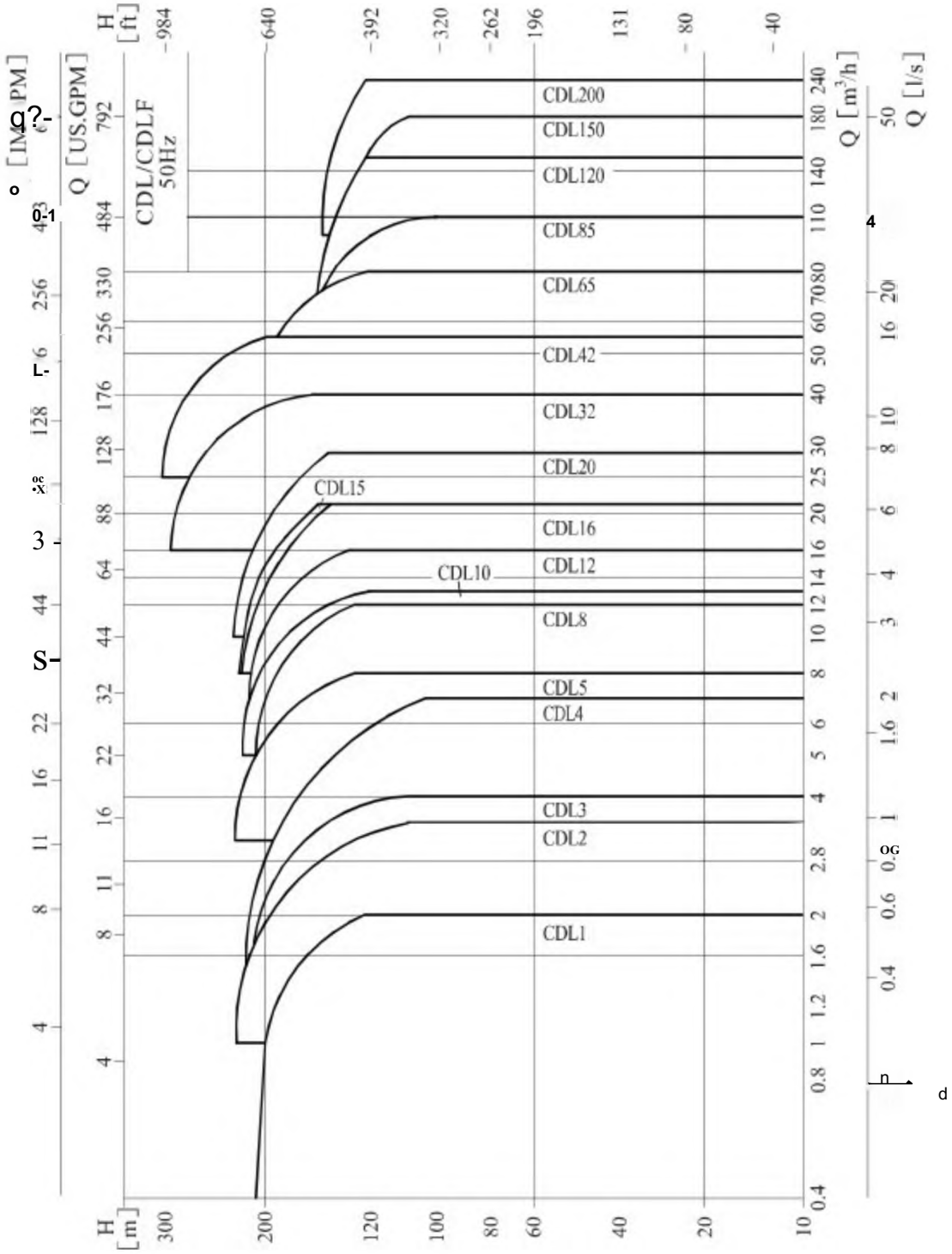

• Product range

Dctcnpoaa	CDLI	CDU	CDU	C1M.4	CDL5	CPU	CVL10	CIH.I2	C1M.1S	CIXJ6	CIMJO	CDU2	CDL42	CDL65	(DUS	"MJX>	(DU 50	CDL200
IU<e flow[m³/h]	1	2	3	4	S	s	10	12	IS	16	20	)2	42	65	S$	120	ISO	200
Rmc flow[U/s]	0.2R	056	O.M	l.l	1.39	22	2.7»	3J	4.1?	44	5.fr	建，	117	IK	w	35	41 >	55*
now ra^ni'hl	0L4.2	l>J.S	1.2-1	13.7	3-8	5.12	$*IJ	7.|6	M-22	*•22	ID-2X	16-40	2S-5S	IO.MO	50-110	60-150	80-180	IOIK24O
flow nMfdU]	• II4M6	o^wi»r	0.W-1.I	04 : 1 9	0.83-2.22	1.4-3.3	1.4-3.61	1 944	2.2 Al	12*. ,	2.«7.«4.本	III	69 -15.3	M 1 22 2	13.8-30.5	K7-4I 7	22-SO	2T.U661
MAX prvMMr«HhM]	21	23	22	21	2>	21	22	22	22	22	21	29	30	22	1?	16	16	16
Motor pcm erf kW]	oj , .ri	OJ , .J	0.37-3	037-4	or.55	W5	0 <5-7.2	1.5*11	1.1.15	2J-IS	1 1.185	1.5-30	?U-45	4CM5	”《45	11.75	11.73	IHMI ●
lan^'C]	-15~+120																	
MAXxflk«w>(%]	44	46	M	57	64	62	68	63	70	66	69	*n*	75	?6	*n*	74	73	*T9*
Type																		
cot	參	拳	●	●	●	●	參	●	●	參	●	●	●	參	●	參	●	●
CDLF	參	●	參	●	●	拳	●	●	●	●	●	●	●	●	●	●	●	●
<I>L P<*iinr<																		
DINFlMi«e	DN25	DN2S	DN25	DN32	DNJ2	DS4O	DN4O	DNM»	DM5O	DN5O	DN50	DK6S	DNRO	DKt«»	D ` k«i	DNI25	DNI25	DKISO
Oval Fian|^	*QI*	G1	Gl	01%	G1*4	OIK	Gl%											
COLT PipcliKa																		
DINFlaocc	DN25	DN25	DN25	DN32	DN32	DM0	DN-W	DN50	DX50	DN50	DN50	DW	DN»0	DNIOO	DM00	DN125	DNI25	DN150
CMmf fcvmk joint	DNJ2	IW32	DN32	DN32	DMJ2	DK50	DN50	DN50	DV50	DN50	DN50							
Pipe thread	ZGI%	zur.	ZGI%	zum	ZGI^	ZG2	ZG2	ZG2	ZG2	ZG2	ZU2							
Oval»taft||c	Gl	Gl	Gl	*GV4*	Gl%	Gl^	Gl%											

參 Performance table

Model	Driving motor (kW)	Driving motor (hp>	Q (m³/h)	0.4	0.6	0.8	1.0	1.2	1.4	1.6	1.8	2.0
CDLl-2	0.37	0.5		B	12.5	12	11.5	II	10.5	10	9.5	9
CDLI-3	0.37	0.5		19	18	IZ5	17	16.5	16	15	14	12
CDl.M	0.37	0.5		24	23.5	23	22.5	21.5	21	19	19	16
CDLI-5	0.37	0.5		30	29.6	29	28	27	26	24	22	20
CDLI-6	037	0.5		36	355	35	33.5	33	31	2R	26	23
CDL1-7	0.37	0.5		42	4垂	40.5	39	38	36	33	30	27
CDL1-8	0.55	0.75		48	47	46	45	43	41	38	34	30
OL1-9	0.55	0.75		54	53	52	51	4<)	46	43	39	33
CDL1-10	0.55	0.75		60	59	58	57	54	51	4X	43	36
CDI.I-ll	0.55	0.75		66	65	63	61	59	56	52	47	40
CDLI-12	0.75	1	H	72	71	69	67	64	61	57	51	44
CDLI-B	0.75	1	(m)	78	77	75	73	69	66	62	55	47
CDL1-15	0.75	1		R9	期	86	M	79	76	n	63	55
CDL1-17	LI	1.5		101	99	97	95	89	86	80	71	62
CDIJ-W	14	1.5		IB	no	108	106	99	丸	89	79	69
CDL1-21	14	1.5		124	122	120	117	110	106	9H	87	75
CDLI-23	1.l	15		137	133	131	128	121	116	107	96	82
CDLI-25	1.5	2		149	145	143	139	131	126	116	104	89
CDLI-27	1.5	2		161	157	155	150	141	136	125	112	95
CDLI-30	1.5	2		178	175	171	166	157	150	139	124	106
CDL1-33	2.2	3		196	192	1K8	1X3	173	165	154	137	11S
CDLI-36	2.2	3		214	210	205	200	190	1RI	169	151	130

參 Installation sketch

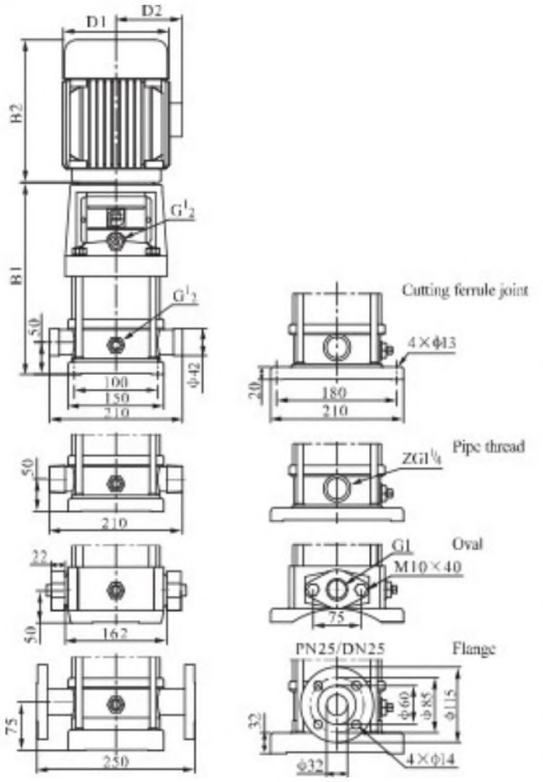

• Size and weight

Model	Size (mm) B1	B2	B1+B2	D1	D2	Weight (kg)
CDLI-2	258	225	4X3	I4K	117	20
CDLI-3	276	225	501	I卟	117	20
CDLI-4	294	225	519	148	117	21
CDLI-5	312	225	537	I4K	II7	21
CLJLI-6	330	225	555	1邪	ir	22
CDLI-7	548	225	~573~	148	Ti7	23
CDLI-8	366	225	591	M8	Ti7	24
CDLI-9	384	225	609	I4K	117	25
CDLI-10	402	225	627	U8	117	26
CDLI-11	420	225	645	148	TF	26
CDLI-12	448	245	693	170	142	29
CDLI-13	466	245	711	no	M2	Jo
CDLI-15	502	245	747	170	U2	5T
CDLI-17	538	245	783	J70	142	33
<DL -19	574	245	819	rro	J42	34
CDLI-21	610	245	855	no	M2	35
CDLI-23	f»46	245	891	170	142	36
CDLI-25	692	290	9打	190	J55	42
CDLI 互	728	290	1018	190	J55	43
CDLI-30	7«2	290	1072	J90	155	45
CDLI-33	836	290	1126	190	1^	49
CDLI-36	890	290	1180	Too	155	IF

CDLI-25 -)-36 sub-connrclion of pipeline has no ovul flange connection.

Ihc overall dimensions of the single-phase motor and explosion-proof motor arc a little different. Pls contact us for details.

Multistage Jockey Pumps PET

PET Multistage Jockey Pump with Air Pressure Tank

TECHNICAL DESCRIPTION

- New vertical multistage centrifugal pump
- Original design by PURITY
- Both square motor & round motor available
- YE3 high efficient motor, with protection IP55 class F

-Pump case with anti-corrosive coating

- Impeller in techno-polimer
- Shaft in stainless steel AISI 304 or galvanized iron
- Suction and discharge port in cast iron G20 thread
- Quality NSK bearing, wear resistance mechanical seal

Product Specification (50HZ)

NEW/NUEVO

TECHNICAL DESCRIPTION

-New vertical multistage centrifugal pump
-Original design by PURITY
■ Both square motor & round motor available
-YE3 high efficient motor, with protection IP55 class F
-Pump case with anti-corrosive coating
• Impeller in techno-polimer
■ Shaft in stainless steel AISI 304 or galvanized iron
■ Suction and discharge port in cast iron G20 thread
• Quality NSK bearing, wear resistance mechanical seal

USING LIMITS

■ Liquid temperature between -10°C and +120°C
■ Ambient temperature up to +50°C
■ Max. working pressure 25 bar
■ Continuous service S1

APPLICATIONS

■ Suitable for use with clean water and liquids that are not chemically aggressive towards the materials from which the pump is made. The high efficiency and adaptability of these pumps to even the most unusual of applications, makes them ideal for use in the domestic, civil and industrial sectors; in particular for the distribution of water in combination with pressure sets and for pressure boosting.

TECHNICAL DATA / *DATOS TECNICOS*

50 Hz n=2900 1/min

MODEL *MODELO*	Power *Potencia*		US	Q=DEUVERY / *CAUDAL*																				DN
			QPm	0	5	**11**	13	16	19	21	24	26	29	32	37	42	4B	53	5S	63	69	74	79	
			l/min	0	20	**40**	**50**	60	70	80	90	100	110	120	**140**	160	180	200	220	240	260	280	300	
	kw	hp	m³/h	0	1.2	**2.4**	3	3.6	4.2	4.8	5.4	**6**	6.6	7.2	8.4	9.6	10.8	12	13.2	14.4	15.6	16.8	18	mm
PV 4x7/1.5	1.1	1.5		60.7	56.8	52.1	49	45.9	42.8	38.9	35	30.3	25.7	20.2										25x25
PV 4x9/2	1.5	2		78	73	67	63	59	55	50	45	39	33	26										25x25
PV 4x13/3	22	3		113	105	96.8	91	85.2	79.4	72.2	65	56.3	47.7	37.5										25x25
PV 4x16/4	3	4		139	130	119	112	105	97.8	88.9	80	69.3	58.7	46.2										25x25
PV 6x5/1.5	1.1	1.5		44.4				135.5	33.3	30.9	28.4	26.1	23.4	20.2	14.3	6.8								32x32
PV 6x8/2	1.5	2		71.1				56.7	53.2	49.5	45.5	41.8	37.5	32.4	22.9	10.9								32x32
PV 6x11/3	22	3		97.7				78	73.2	68	62.5	57.5	51.5	44.5	31.5	15								32x32
PV 6x15/4	3	4		133				106	99.8	92.7	85.2	78.4	702	60.7	43	20.5								32x32
PV8x4/1.5	1.1	1.5		36.8						30	28.4	27.2	26	24.4	21.2	17.6	13.2	9.2	4.8					40x40
PV 8x7/2	1.5	2	**H(m)**	64.4						52.5	49.7	47.6	45.5	42.7	37.1	30.8	23.1	16.1	8.4					40x40
PV 8x9/3	22	3		82.8						67.5	63.9	61.2	58.5	54.9	47.7	39.6	29.7	20.7	10.8					40x40
PV 8x12/4	3	4		110						90	85.2	81.6	78	73.2	63.6	52.8	39.6	27.6	14.4					40x40
PV 8x16/5.5	4	5.5		147						120	114	109	104	97.6	84.8	70.4	52.8	36.8	19.2					40x40
PV 12x3/1.5	1.1	1.5		31								25.4	24.7	24	22.4	20.6	18.4	16.2	13.3	10.9	8.3	5.1	2	50x50
PV 12x5/2	1.5	2		51.7								42.4	412	40	37.3	34.3	30.7	27	22.2	18.2	13.8	8.5	3.3	50x50
PV 12x7/3	22	3		72.3								59.3	57.6	56	52.3	48.1	43	37.8	31	25.5	19.4	11.9	4.7	50x50
PV 12x9/4	3	4		93								76.2	74.1	72	67.2	61.8	55.2	48.6	39.9	32.8	24.9	15.4	6	50x50
PV 12x12/5.5	4	5.5		122								102	98.8	96	89.6	82.4	73.6	64.8	53.2	43.8	33.2	20.5	8	50x50
PV 12x17/7.5	5.5	7.5		176								144	140	136	127	117	104	91.8	75.4	62	47	29	11.3	50x50

MODEL *MODELO*	Power *Potencia*		US	Q=DELIVERY/GA£/DZZ.									DN
			gpm	0	26	53	79	106	132	159	185	211	
			l/min	0	100	200	**300**	400	500	600	**700**	800	
	kw	hp	m³/h	0	6	12	18	24	30	36	42	48	mm
PV 30x7/10	7.5	10		104	100	93	83	74	64	49	31	4	
PV 30x9/12	92	12.5	**H(m)**	133	128	119	108	96	82	63	40	5	50x50
PV 30x11/15	11	15		163	156	145	132	116	99	77	48	6	65x65

PERFORMANCE CURVE / *CURVAS DEFUNOONAMIENTO*

50 Hz n=2900 1 /min

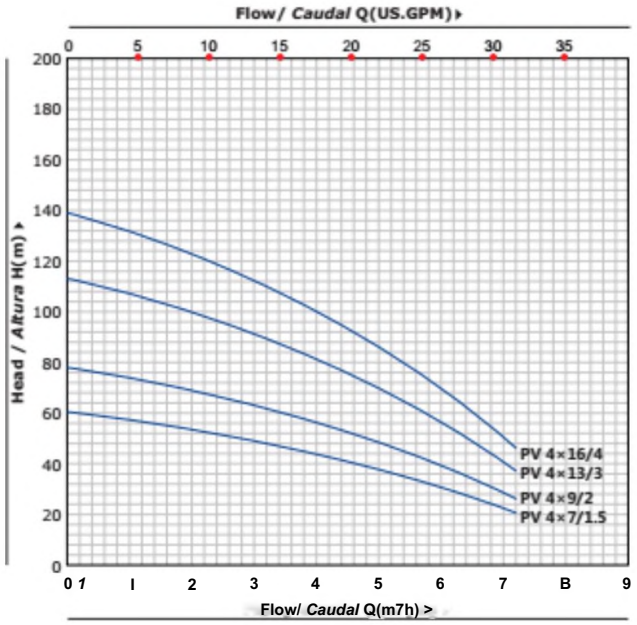

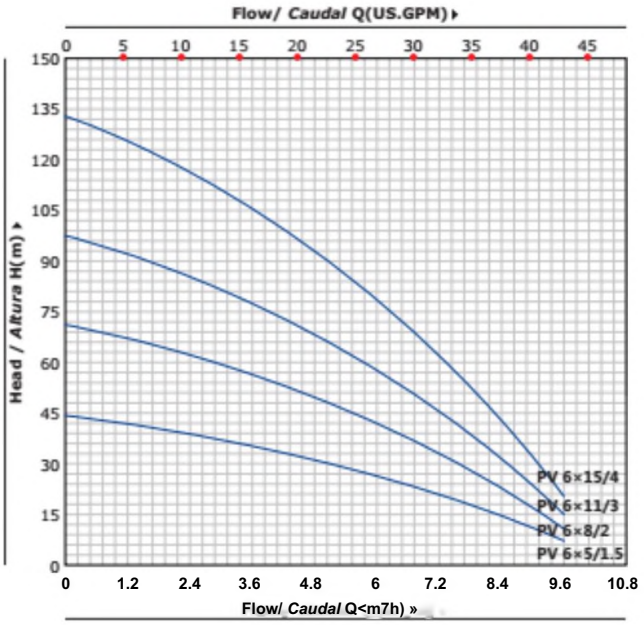

PERFORMANCE CURVE / *CURVAS DE FUNCIONAMIENTO*

50 Hz n=29001/min

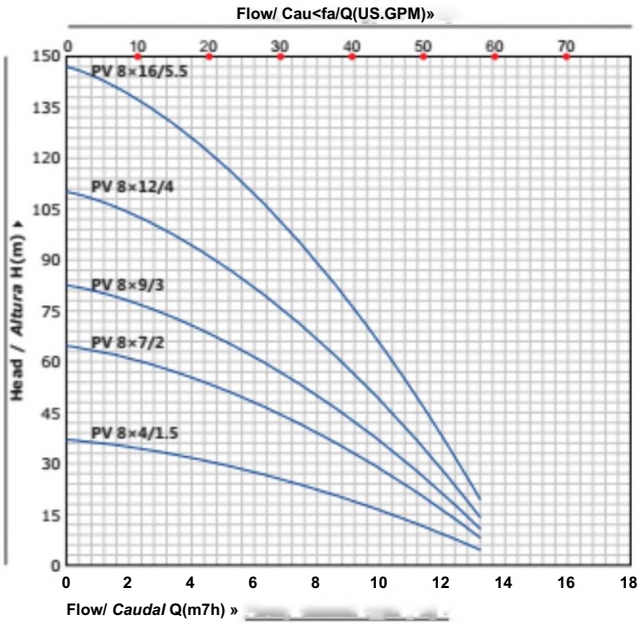

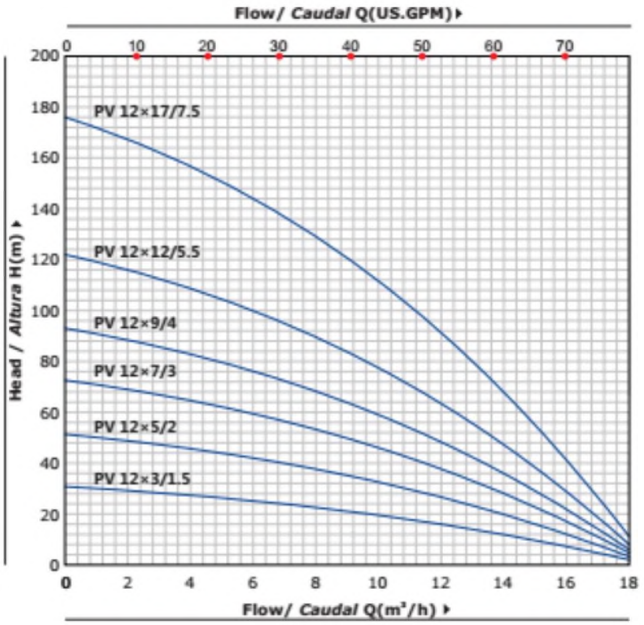

MATERIAL DESCRIPTION / *DESCRIPCIbN DE MATERIAL*

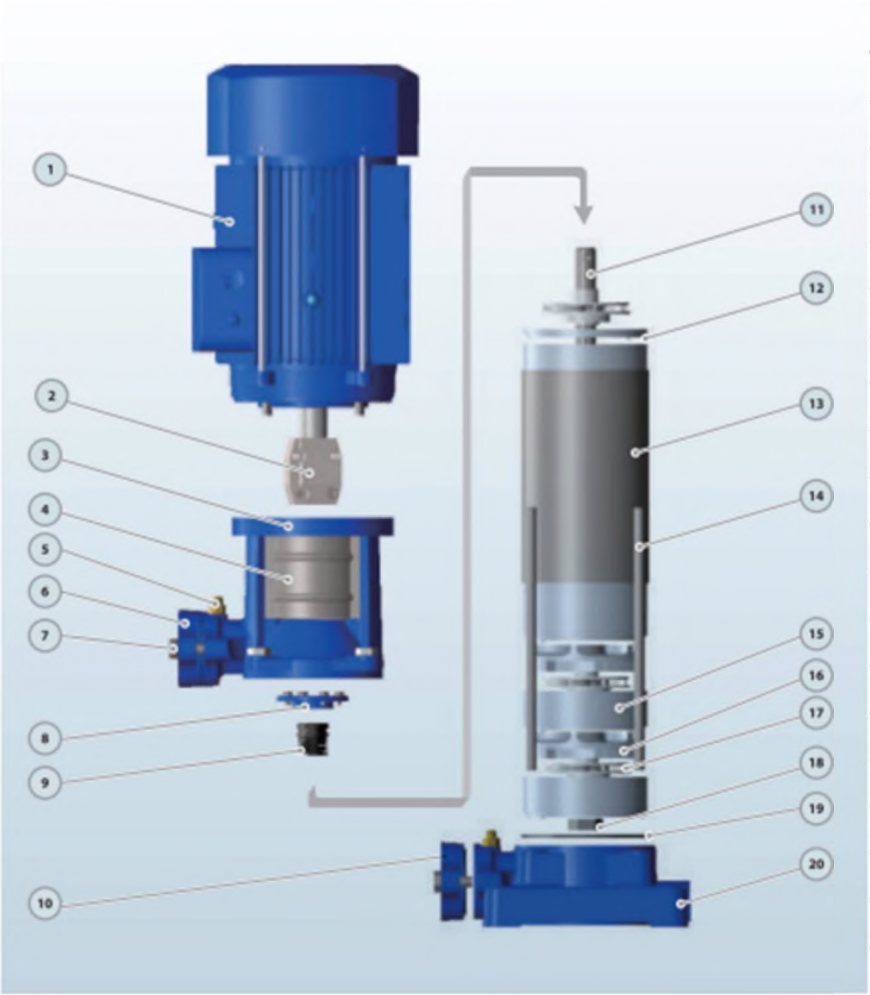

No.	Description *Descrip ción*	Material ***Material***
1	Motor *Motor*	IP55 Class F *IP55ClaseF*
2	Coupling I/nión	Iron *Hierro*
3	Discharge Body *Cuerpo Impulsión*	Cast iron *Fundición*
4	Cover *Taps*	SS304 *Inox 304*
5	Release Valve *Tapón Cebado*	Brass *Bronce*
6	Discharge *Impulsión*	Cast iron *Fundición*
7	Bolt *Pemo*	Steel *Acero*
8	Seal Cover *Tapa Cierre*	Cast iron *Fundición*
9	Mechanical Seal *Ciefre Mecánico*	SiC/Carbon/SS304 *SiC-Grafito-Inox304*
10	Suction *Aspiración*	Cast iron *Fundición*
11	Pump Shaft 印	SS304/45# Iron *Inox 304/45^ hierro*
12	Diffuser Top Cover *Tope Tapa Difusor*	Technopolimer *TecnopoHmero*
13	Pump Cover *Tapa Bomba*	SS304 *Inox 304*
14	Through BoK *Pemo*	Steel *Acero*
15	Diffuser Cover *Tapa Difusor*	Technopolimer with SS304 ring *Tecnopolmero con Inox aniDo*
16	Diffuser *Difusor*	Technopolimer with SS304 ring *TecnopoHmero con Inox aniHo*
17	Impeller *Impufsor*	Technopolimer TecnopoAimefD
18	Impeller Nut *Tuerca de Impulsor*	Galvanized Steel *Acero Galvanizado*
19	O-ring *Junta Tórica*	Rubber Cauc/io
20	Suction Body *Cuerpo Aspiración*	Cast iron *Fundición*

PERFORMANCE CURVE / *CURVAS DEFUNCIONAMIENTO*

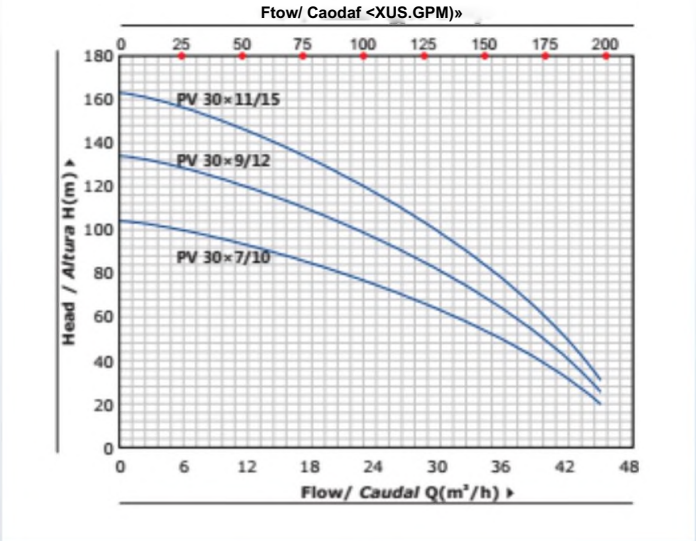

DIMENSIONS AND WEIGHT / *DIMEN^IONES Y PESOS*

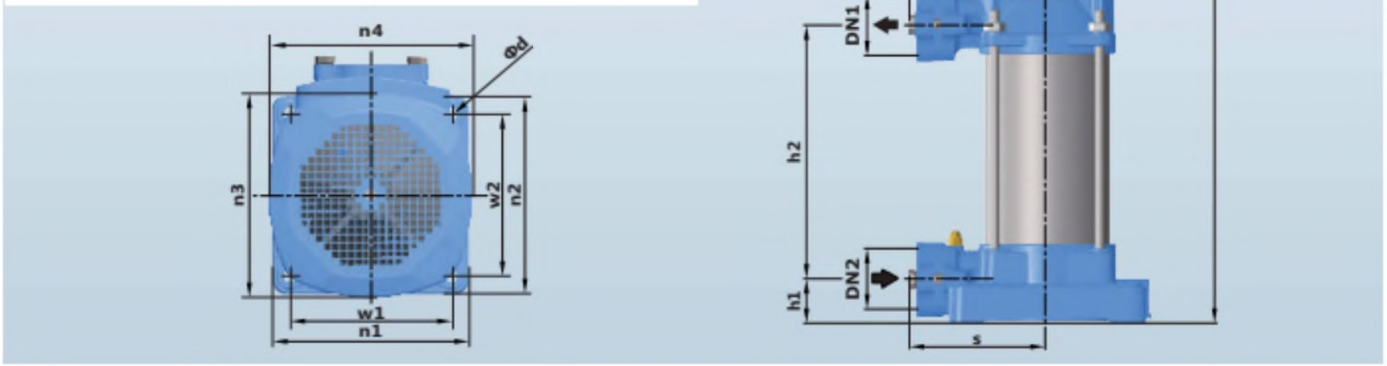

MODEL *MODELO*	DIMEN SION S / *DIMENSIONES* mm															ka	
	DN1	DN2	N	a	s	h	hi	h2	w1	w2	n1	n2	n3	n4	d	⊢	3-
PV 4x7/1.5	25/32	25/32	7	141	141	720	45.5	261.5	165	165	202	202	175	175	12	**28.0**	**27.0**
PV 4x9/2	25/32	25/32	9	141	141	790	45.5	331.5	165	165	202	202	175	175	12	**33.0**	**32.0**
PV 4x13/3	25/32	25/32	13	141	141	930	45.5	471.5	165	165	202	202	175	175	12	**38.0**	**37.0**
PV 4x16/4	25/32	25/32	16	141	141	1082	45.5	576.5	165	165	202	202	195	195	12	**48.0**	**47.0**
PV 6x5/1.5	25/32	25/32	5	141	141	650	45.5	191.5	165	165	202	202	175	175	12	**26.0**	**25.0**
PV 6x8/2	25/32	25/32	8	141	141	755	45.5	296.5	165	165	202	202	175	175	12	**31.0**	**30.0**
PV6x11/3	25/32	25/32	11	141	141	860	45.5	401.5	165	165	202	202	175	175	12	**36.0**	**35.0**
PV 6x15/4	25/32	25/32	15	141	141	1047	45.5	541.5	165	165	202	202	195	195	12	**46.0**	**45.0**
PV8x4/1.5	40/50	40/50	4	141	141	615	45.5	156.5	165	165	202	202	175	175	12	**26.0**	**25.0**
PV 8x7/2	40/50	40/50	7	141	141	720	45.5	261.5	165	165	202	202	175	175	12	**31.0**	**30.0**
PV 8x9/3	40/50	40/50	9	141	141	790	45.5	331.5	165	165	202	202	175	175	12	**36.0**	**35.0**
PV 8x12/4	40/50	40/50	12	141	141	942	45.5	436.5	165	165	202	202	195	195	12	**46.0**	**45.0**
PV 8x16/5.5	40/50	40/50	16	141	141	1082	45.5	576.5	165	165	202	202	195	195	12	-	**50.0**
PV 12x3/1.5	40/50	40/50	3	141	141	580	45.5	121.5	165	165	202	202	175	175	12	**25.0**	**24.0**
PV 12x5/2	40/50	40/50	5	141	141	650	45.5	191.5	165	165	202	202	175	175	12	**30.0**	**29.0**
PV 12x7/3	40/50	40/50	7	141	141	720	45.5	261.5	165	165	202	202	175	175	12	**35.0**	**34.0**
PV 12x9/4	40/50	40/50	9	141	141	837	45.5	331.5	165	165	202	202	195	195	12	**45.0**	**44.0**
PV 12x12/5.5	40/50	40/50	12	141	141	942	45.5	436.5	165	165	202	202	195	195	12	-	50.0
PV 12x17/7.5	40/50	40/50	17	141	141	1167	45.5	611.5	165	165	202	202	204	204	12	•	**60.0**
PV 30x7/10	50/65	50/65	7	170	170	1046	62	416	187	187	230	230	260	260	12	-	**86.0**
PV 30x9/12	50/65	50/65	9	170	170	1153	62	523	187	187	230	230	260	260	12	-	**92.0**
PV 30x11/15	50/65	50/65	11	170	170	1260	62	630	187	187	230	230	260	260	12	-	**100**

Product Specification (60HZ)

NEW/NUEVO

TECHNICAL DESCRIPTION

-New vertical multistage centrifugal pump
-Original design by PURITY
■ Both square motor & round motor available
-YE3 high efficient motor, with protection IP55 class F
-Pump case with anti-corrosive coating
• Impeller in techno-polimer
■ Shaft in stainless steel AISI 304 or galvanized iron
■ Suction and discharge port in cast iron G20 thread
• Quality NSK bearing, wear resistance mechanical seal

USING LIMITS

■ Liquid temperature between -10°C and +120°C
■ Ambient temperature up to +50°C
■ Max. working pressure 25 bar
■ Continuous service S1

APPLICATIONS

■ Suitable for use with clean water and liquids that are not chemically aggressive towards the materials from which the pump is made. The high efficiency and adaptability of these pumps to even the most unusual of applications, makes them ideal for use in the domestic, civil and industrial sectors; in particular for the distribution of water in combination with pressure sets and for pressure boosting.

TECHNICAL DATA /*DATOS TiCNICOS*

60 Hz n=3450 1/min

MODEL *MODELO*	Power *Potencia*		US gpm	Q DELIVERY / *CAUDAL*																				DN
				0	5	H	13	16	19	21	24	26	29	32	37	42	48	53	58	63	69	74	79	
			IZmin	0	20	40	50	60	70	80	90	100	110	120	140	160	180	200	220	240	260	280	300	
	kw	hp	m*/h	0	1.2	2.4	3	3.6	4^	4.8	5.4	6	6.6	7J	8.4	9.6	10.8	12	13.2	14.4	15.6	16.8	18	mm
PV4x 4/1.5	1.1	1.5		52	49	46	44	41	39	37	33	30	27	23										
PV 4x€/2	1.5	2		77	74	69	66	63	58	55	50	45	40	34										
PV 4x8/3	22	3		104	99	92	88	84	78	73	66	60	53	45										
PV 4x10/4	3	4		129	124	116	110	104	97	91	83	75	66	57										
PV 4x13/5.5	4	5.5		168	161	150	143	136	126	119	108	97	86	74										
PV 4x16/7.5	5.5	7.5		206	198	185	177	167	156	146	133	119	106	91										25x25
PV6x 3/1.5	11	1.5		40				36	35	33	31	30	28	26	22	17								32x32
PV 6x5/2	1.5	2		66				60	58	55	52	50	47	43	36	28								
PV 6x7/3	22	3		92				85	81	78	73	70	66	61	51	40								
PV fix 9/4	3	4		119				109	104	100	94	90	84	78	65	51								
PV 6x12/5.5	4	5.5		159				145	139	133	125	120	113	104	87	68								
PV 6x16/7.5	5.5	7.5		197				180	173	165	156	150	140	130	108	85								
PV 8x4/2	1.5	2	H(m)	53						44	42	41	39	37	33	29	23	17	12					
PV8x«/3	22	3		79						66	64	61	59	56	50	44	35	26	18					
PV 8x8/4	3	4		105						88	85	82	78	74	66	58	46	34	24					
PV 8x10/5.5	4	5.5		132						110	106	102	98	93	83	73	58	43	30					
PV 8x13/7.5	5.5	7.5		171						143	138	133	127	121	108	95	75	56	39					
PV 8x 17/10	7.5	10		224						187	180	173	167	158	141	124	99	73	51					
PV 12x3/2	1.5	2		44								43	42	41	40	38	36	33	30	27	24	20	17	40x40
PV 12x4/3	22	3		59								58	57	55	53	50	48	44	40	36	32	27	23	50x50
PV 12x5/4	3	4		73								72	71	69	66	63	60	55	50	45	40	34	29	
PV 12x7/5.5	4	5.5		102								101	99	97	92	88	84	77	70	63	56	48	40	
PV 12x9/7.5	5.5	7.5		132								130	127	124	119	113	108	99	90	81	71	61	51	
PV 12x11/10	7.5	10		161								159	155	152	145	138	131	121	110	99	87	75	63	
PV 12x15/15	11	15		220								217	212	207	198	189	179	165	150	136	119	102	86	

MODEL *MODELO*	Power *Potencia*		US gpm	Q DELIVERY / *CAUDAL*									DN
				0	26	53	79	106	132	159	185	211	
			l/min	0	100	200	300	400	500	600	700	800	
	kw	hp	nrp/h	0	6	12	18	24	30	36	42	48	mm
PV 30x5/10	7.5	10		105	100	93	86	78	67	54	36	4	50x50
PV30x«/12	9.2	12.5	H(m)	126	120	112	103	94	80	65	44	5	65x65
PV 30x8/15	11	15		168	158	149	138	124	106	86	58	6	80x80

PERFORMANCE CURVE / *CURVAS DEFUNCIONAMIENTO*

60 Hz n=34501/min

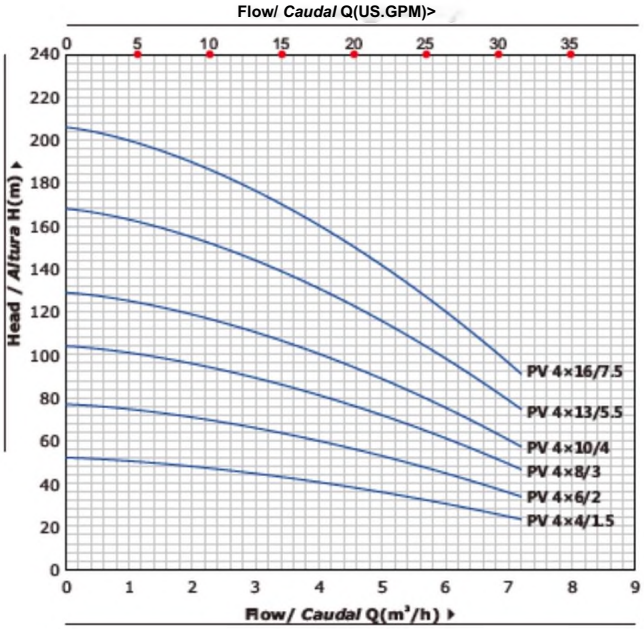

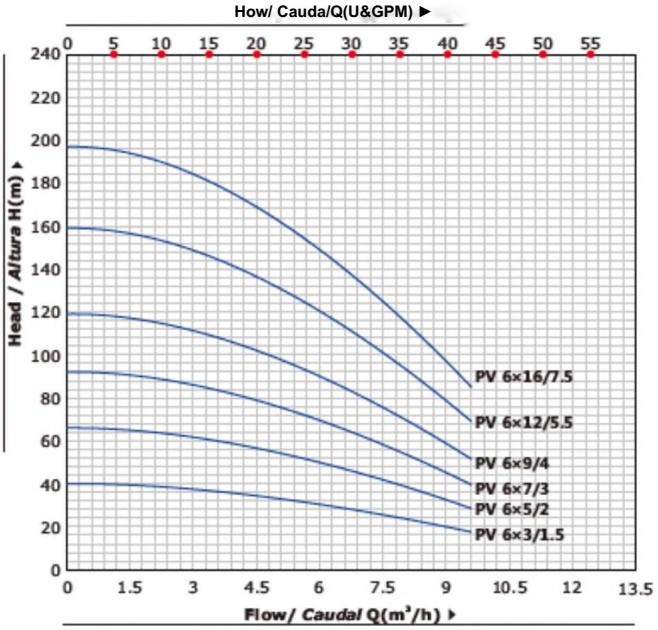

MATERIAL DESCRIPTION / *DESCRIPCIdN DE MATERIAL*

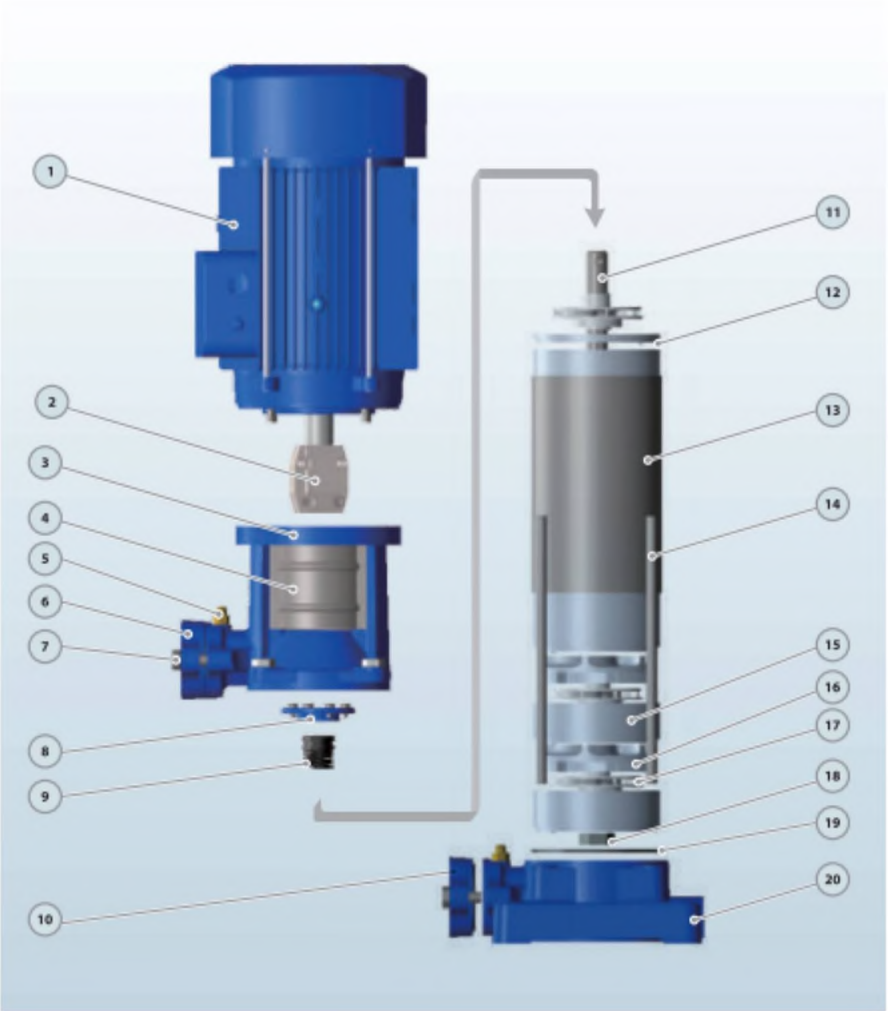

PERFORMANCE CURVE / *CURVAS DEFUNOONAMIENTO*

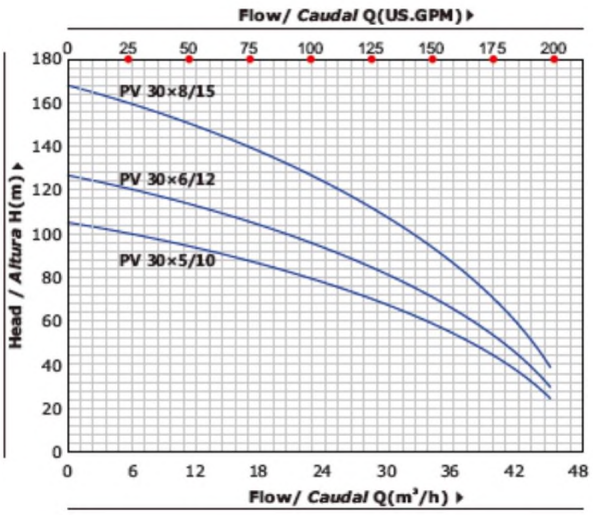

DIMENSIONS ANDWEIGHT/D/M£NS/ON£S y PESOS

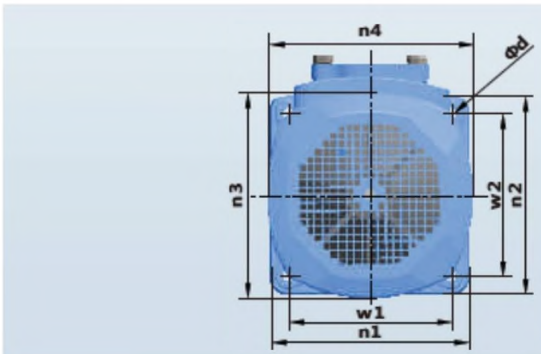

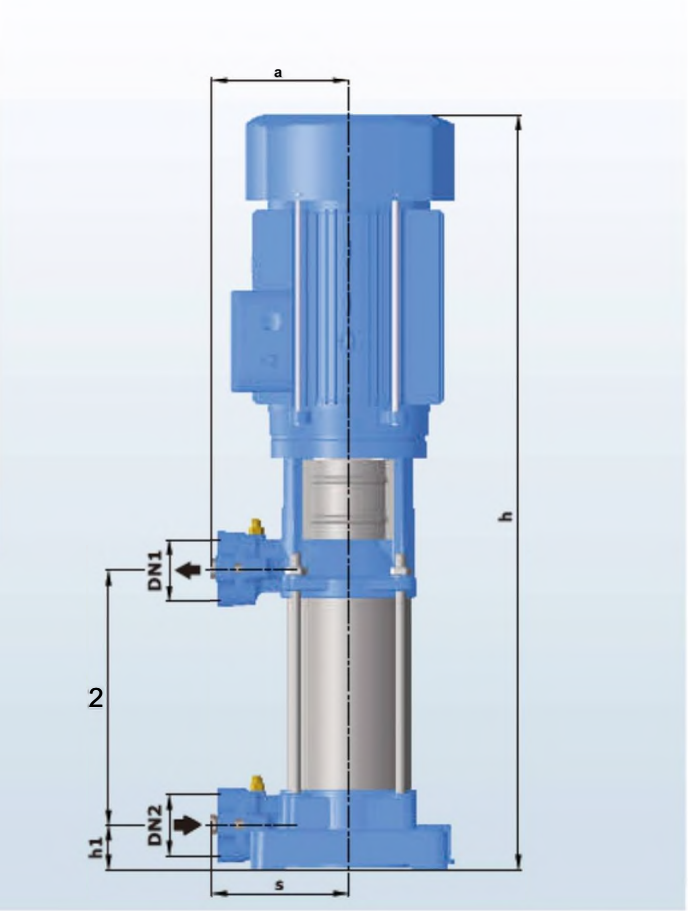

MODEL / MODELO		DIMENSIONS / *DIMENSIONES* mm															kg	
Single-phase Monofásico	Three-phase Trifásico	DN1	DN2	N	a	s	h hi K2 w1 w2 | n1						n2	n3 r>4 d			1~	3~
PV4x4/1.5	PV4x4/L5	25/32	25/32	4	141	141	615.5	45.5	156.5	165	165	202	202	175	175	| 12	27.0	26.0
PV 4x6/2	PV 4x6/2	25/32	25/32	6	141	141	685.5	45.5	226.5	165	165	202	202	175	175	if	3Z0	31.0
PV 4x8/3	PV 4x8/3	25/32	25/32	8	141	141	755.5	45.5	296.5	165	165	202	202	175	175	12	37.0	36.0
PV4X1Q/4	PV4xIQ/4	25/32	25^31	10	141	141	8725	45.5	366.5	165	165	202	202	195	195	12	47.0	46.0
-	PV 4x13/5.5	25/32	25/32	13	141	141	977.5	45.5	471.5	165	165	202	202	195	195	12	■	51.0
-	PV 4x16/7.5	25/32	25/32	16	141	141	11325	45.5	576.T	165	165	202	202	204	204	12	■	61.0
PV6x 3/1,5	PV6x3/L5	25/32	25/32	I-	141	141	580.5	45.5	121.5	165	165	202	302	175	175	12	26.0	25.0
FV 6x5/2	PV 6x5/2	25/32	2532	5	141	141	650.5	45.5	191.5	165	165	202	202	175	175	li	3L0	30.0
PV 6x7/3	PV 6x7/3	25/32	25/32	7	141	141	720.5	45.5	261.5	165	165	舶	202	175	175	□	36.0	35.0
PV 知9/4	PVSx，，感	25/32	25/32	9	141	141	837.5	45.5	331.5	165	165	202	202	195	195	12	46.0	45.0
-	PV 6x12/5.5	25/32	25/32	12-	141	141	942.5	45.5	436.5	165	165	202	202	195	195	12	-	50.0
-	PV6xI^7.5	25/32	25/32	16	141	141	11325	45.5	576.5	165	165	202	202	204 I 204 I if			■	60.0
PV 8x4/2	PV 8x4/2	40/50	40/50	4	141	141	615.5	45.5	1565	165	165	202	202	175	175	12	3 0.0	29. o
PV 8x€/3	PV 8x6/3	40/50	40/50	6	141	141	685.5	45.5	226.5	165	165	202	202	17(	175	12	3 5.0	34. o
PV 8x8/4	PV 8x8/4	40/50	40/50	8	141	141	8025 45.5 296.5			165	165	202	202	195	195	12	4 5.0	44. 49. o
-	PV 8xIQ/5.5	40/50	40/50	10	141	141	8725	45.5	366.5	165	165	202	202	195	195	12	-	S9.
-	PV 8x13/7.5	40/50	40/50	13	141	141	1027.5	45.5	471.5	165	165	202	202	204	204	12	-	64. o
-	PV 8x17/10	40/50	40/50	17	141	141	11675	45.5	6115	165	165	202	202	2乂	204	12	-	o
PV12xV2	PV 12x3/2	40/50	40/50	3	141	141	580.5	45.5	121.5	165	I 16S I 202 I 202 I 175 | 17S I 12						2&0	27.0 o
PV 12x^3	PV12x^3^|40/50 40/50			4	141	141 61S5 453 1565 165					165	202	202	175	175	12	310	32.0
PV 12x5/4	RQ2x 5/4	40/50	40/50	5	141	141	697.5	45.5	191.5	165	165	202	202	195	195	12	4L0	40.0
-	PVllx^rSJ	40/50	40/50	7	Ml	141	76Z5	455	趾5	兩	165	202	202	195	195	12	-	45.0
-	PV12x9jr7J	40^50	卜50	9	U1	141	887«5	4S»5	副5	祕	165	202	202	204	204	12	-	55.0
-	PVUxli/10	4(^504(^50		11	141	141	95Z5	45»5	4015	165	165	202 |	202	204	204	12	-	62.0
-	PV 12x15/15	40/50	40/50	15	141	141	1127.5	45.5	541.5	165	165	202	202	260	260	12	-	80.0
-	PV30x5/i❶	5(^655(^65		5	170	170	939	62	3的	187	187	230	230	260	260	12	•	84.0
-	PV 30x6/12	50/6550/65!		6	| 170 | 170		| 朔 |	62	|~362.5	187	I 1«7 I 230 I 230 I 260 I 260 I 12						-	90.0
-	PV 30x9/15	50/65 50/65! 8			| DO | 170 | HOP | 62 |4695| 187 | 187 | 230 | 230 | 260 | 260 | U												-	97.0

По вопросам продаж и поддержки обращайтесь:

Алматы (7273)495-231
Архангельск (8182)63-90-72
Астрахань (8512)99-46-04
Барнаул (3852)73-04-60
Белгород (4722)40-23-64
Брянск (4832)59-03-52
Владивосток (423)249-28-31
Волгоград (844)278-03-48
Вологда (8172)26-41-59
Воронеж (473)204-51-73
Екатеринбург (343)384-55-89
Иваново (4932)77-34-06
Ижевск (3412)26-03-58
Иркутск (395)279-98-46
Казань (843)206-01-48
Калининград (4012)72-03-81
Калуга (4842)92-23-67
Кемерово (3842)65-04-62
Киров (8332)68-02-04
Краснодар (861)203-40-90
Красноярск (391)204-63-61
Курск (4712)77-13-04
Липецк (4742)52-20-81
Магнитогорск (3519)55-03-13
Москва (495)268-04-70
Мурманск (8152)59-64-93
Набережные Челны (8552)20-53-41
Нижний Новгород (831)429-08-12
Новокузнецк (3843)20-46-81
Новосибирск (383)227-86-73
Омск (3812)21-46-40
Орел (4862)44-53-42
Оренбург (3532)37-68-04
Пенза (8412)22-31-16
Пермь (342)205-81-47
Ростов-на-Дону (863)308-18-15
Рязань (4912)46-61-64
Самара (846)206-03-16
Санкт-Петербург (812)309-46-40
Саратов (845)249-38-78
Севастополь (8692)22-31-93
Симферополь (3652)67-13-56
Смоленск (4812)29-41-54
Сочи (862)225-72-31
Ставрополь (8652)20-65-13
Сургут (3462)77-98-35
Тверь (4822)63-31-35
Томск (3822)98-41-53
Тула (4872)74-02-29
Тюмень (3452)66-21-18
Ульяновск (8422)24-23-59
Уфа (347)229-48-12
Хабаровск (4212)92-98-04
Челябинск (351)202-03-61
Череповец (8202)49-02-64
Ярославль (4852)69-52-93

Россия (495)268-04-70
Киргизия (996)312-96-26-47
Казахстан (7172)727-132

pyt@nt-rt.ru || https://purity.nt-rt.ru/