Системы пожарных насосов PED, PSDC, PEEJ, PDJ, PEJ, PET

Технические характеристики

По вопросам продаж и поддержки обращайтесь:

Алматы (7273)495-231
Архангельск (8182)63-90-72
Астрахань (8512)99-46-04
Барнаул (3852)73-04-60
Белгород (4722)40-23-64
Брянск (4832)59-03-52
Владивосток (423)249-28-31
Волгоград (844)278-03-48
Вологда (8172)26-41-59
Воронеж (473)204-51-73
Екатеринбург (343)384-55-89
Иваново (4932)77-34-06
Ижевск (3412)26-03-58
Иркутск (395)279-98-46
Казань (843)206-01-48
Калининград (4012)72-03-81
Калуга (4842)92-23-67
Кемерово (3842)65-04-62
Киров (8332)68-02-04
Краснодар (861)203-40-90
Красноярск (391)204-63-61
Курск (4712)77-13-04
Липецк (4742)52-20-81
Магнитогорск (3519)55-03-13
Москва (495)268-04-70
Мурманск (8152)59-64-93
Набережные Челны (8552)20-53-41
Нижний Новгород (831)429-08-12
Новокузнецк (3843)20-46-81
Новосибирск (383)227-86-73
Омск (3812)21-46-40
Орел (4862)44-53-42
Оренбург (3532)37-68-04
Пенза (8412)22-31-16
Пермь (342)205-81-47
Ростов-на-Дону (863)308-18-15
Рязань (4912)46-61-64
Самара (846)206-03-16
Санкт-Петербург (812)309-46-40
Саратов (845)249-38-78
Севастополь (8692)22-31-93
Симферополь (3652)67-13-56
Смоленск (4812)29-41-54
Сочи (862)225-72-31
Ставрополь (8652)20-65-13
Сургут (3462)77-98-35
Тверь (4822)63-31-35
Томск (3822)98-41-53
Тула (4872)74-02-29
Тюмень (3452)66-21-18
Ульяновск (8422)24-23-59
Уфа (347)229-48-12
Хабаровск (4212)92-98-04
Челябинск (351)202-03-61
Череповец (8202)49-02-64
Ярославль (4852)69-52-93

Россия (495)268-04-70
Киргизия (996)312-96-26-47
Казахстан (7172)727-132

pyt@nt-rt.ru || https://purity.nt-rt.ru/

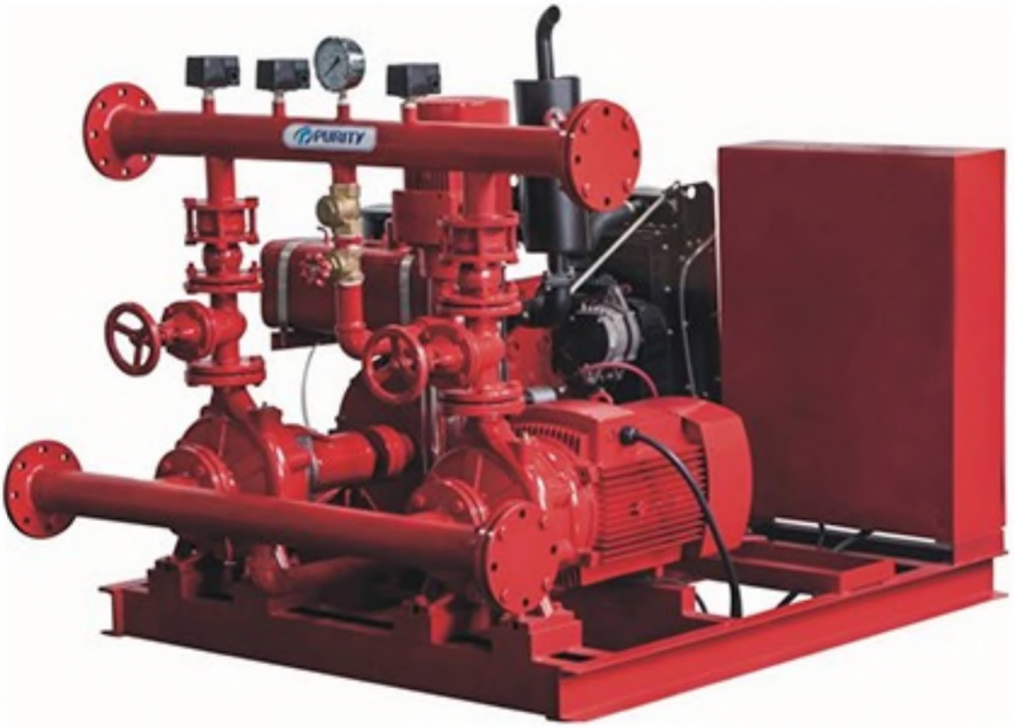

Fire Pump System PEDJ

Fire Fighting Pump Set Electric Diesel Jockey Pump (PEDJ 60Hz)

- Switch Automatically between the three pumps
- Can work when the power is off
- With quality NSK bearings, wear resistance mechanical seal
- Circuit available up on request
- Electronic battery charger

Product Specification (50HZ)

Product Description

PEDJ series Skid Mounted Fire Pump System from Purity

PEDJ Fire Pump Set consists of End Suction Centrifugal Pump driven by Electric Motor, End Suction Diesel Pump, and Vertical Jockey Pump.
Pumps are assembled with discharge line accessories as well as Control Panel.

Available **Flow Capacities 50-1500GPM.**
Availabel **Head/Pressure 1-14bar.**
Accessories include Suction pipe, Discharge pipe with Flanges, Battery, Gate Valves, Check Valves, Flexible Expansion Joints, Pressure Switches, Pressure Gauge, Base Frame, etc.

Advantages
0Switch **Automatically** among the three pumps
]Both Manual and Automatic operation is available
0Can work when the power is off
5 Easy Installation
BCustomized size and pump group
®YE3 high **efficient motor** with protection IP55 class F
0High performance and low power consumption
SPump case with Anti-corrosive coating
0With quality **NSK** bearings, wear resistance mechanical seal
SCircuit available up on request
0Different Mounting Styles
! Low Maintenance Cost and available spare parts
@ Electronic battery charger

形 PURITY

Advantages

Energy-saving Certificate

Large Flow Capacity

YE3 Motor IP55 ClassF All Copper Wire

Stainless Steel 304 Impeller & Shaft

Anti-corrosive Coating

NSK Bearing

Costormized Sizes & Pumps

Good Quality & Service 2-Years Guarantee

命 PURITy

Structure

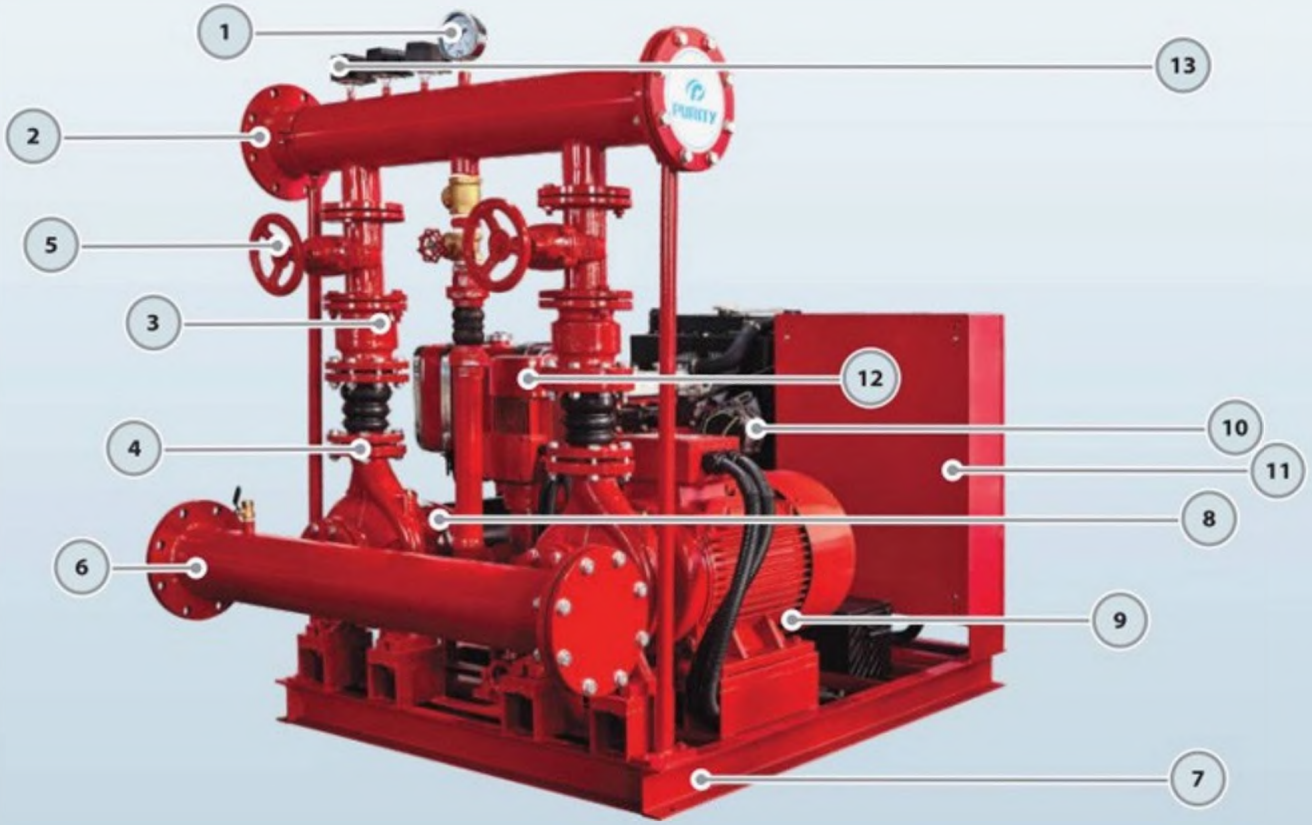

1.Pressure Gauge 2.Dicharge Pipe 3.Check Valve 4.Flexible Joint 5.Gate Valve
6.Suction Pipe 7. Base Frame 8.Pump for Diesel Engine 9.Electric Pump
10.Diesel Engine 11.Control Cabinet 12.Jockey Pump 13.Pressure Switch

命 PURITY

Fire Pump System Models PEDJ

PEDJ 500/ 8 -50-58-5.5

- Jockey Power: 5.5HP
- Diesel Engine Power: 58HP
- Electric Motor Power: 50HP
- Head/Pressure: 8 Bar
- Flow Capacity: 500GPM
- Purity Electric Diesel Jockey

GPM	BAR	REGULAR MODEL	MOTOR PUMP 2900/3500 rpm	PUMP FOR MOTOR &DIESEL ENGINE 2900/3500 rpm
				
50	6	PEDJ50/6-5.5-5.5-2	P2C 32-200/40	PS 32-200/40
80	7	PEDJ80/7-10-8.6-3	PST 32-250/75	PS 32-250/75
100		PEDJ100/7-10-8.6-3	PST 32-250/75	PS 32-250/75
120		PEDJ120/7-10-10-3	PST 32-250/75D	PS 32-250/75H
150		PEDJ150/7-15-10-3	PST 40-250/110	PS 40-250/110
200		PEDJ200/7-20-27-3	PST 40-250/150	PS 40-250/150
250		PEDJ250/7-25-27-4	PST 50-250/185	PS 50-250/185
300		PEDJ300/7-30-32-4	PST 50-250/220	PS 50-250/220
350		PEDJ350/7-30-32-4	PST 50-250/220	PS 50-250/220
400		PEDJ400/7-40-38-5.5	PST 65-250/300	PS 65-250/300
500	8	PEDJ500/8-50-58-5.5	PST 65-250/370	PS 65-250/370
750		PEDJ750/8-75-75-7.5	PST 80-250/550	PS 80-250/550
1000		PEDJ1000/8-100-99-10	PST 100-250/750	PS 100-250/750
1250		PEDJ1250/8-150-130-10	-	PS 125-250/1100
500	10	PEDJ500/10-60-61-7.5	-	PS 65-315/450
750		PEDJ750/10-100-99-10	-	PS 80-315/750
1000		PEDJ1000/10-125-113-12	-	PS 100-315/900
1250		PEDJ1250/10-180-170-15	-	PS 125-315/1320
500	13	PEDJ500/13-100-99-12	-	PS 65-315/750
750		PEDJ750/13-125-113-12	-	PS 80-315/900
1000		PEDJ1OOO/13-15O-13O-15	-	PS 100-315/1100
1250		PEDJ1250/13-220-170-15	-	PS 125-315/1600
1500		PEDJ1500/13-220-170-15	-	PS 125-315/1600

GPM	BAR	MOTOR	DIESEL	JOCKEY	
				 50HZ	60HZ
50	6	-	178-5.5HP	PV4x9/2HP	PV4x6/2HP
80	7	YE3-132S2-2-7.5kw	186-8.6HP	PV6xII/3HP	PV4x6/2HP
100		YE3-132S2-2-7.5kw	186-8.6HP	PV6xII/3HP	PV4x8/3HP
120		YE3-132S2-2-7.5kw	192-10HP	PV6xII/3HP	PV4x8/3HP
150		YE3-160MI-2-IIkw	192-10HP	PV6xII/3HP	PV4x8/3HP
200		YE3-160M2-2-15kw	380-27HP	PV6xII/3HP	PV4x8/3HP
250		YE3-160L-2-18.5kw	380-27HP	PV8xI2/4HP	PV 6x7/3HP
300		YE3-180M-2-22kw	385-32HP	PV8xI2/4HP	PV 8x8/4HP
350		YE3-180M-2-22kw	385-32HP	PV8xI2/4HP	PV 8x8/4HP
400		YE3-200LI-2-30kw	480-38HP	PV 12xI2/5.5HP	PV 12x7/5.5HP
500	8	YE3-200L2-2-37kw	490N-58HP	PV 12xI2/5.5HP	PV 12x7/5.5HP
750		YE3-250M-2-55kw	490Z-75HP	PV 12xI7/7.5HP	PV 12x9/7.5HP
1000		YE3-280S-2-75kw	4102Z-99HP	PV 30x7/10HP	PV 12xII/10HP
1250		YE3-315S-2-110kw	6110-150HP	PV30x7/10HP	PV30x5/10HP
500	10	YE3-225M-2-45kw	490-61HP	PV 12xI7/7.5HP	PV 12x9/7.5HP
750		YE3-280S-2-75kw	4102Z-99HP	PV 30x7/10HP	PV12xII/10HP
1000		YE3-280M-2-90kw	4108Z-113HP	PV 30x9/12HP	PV 30x6/12HP
1250		YE3-315M-2-132kw	6102ZS-170HP	PV 30xII/15HP	PV 30x8/15HP
500	13	YE3-280S-2-75kw	4102Z-99HP	PV 30x9/12HP	PV12xII/10HP
750		YE3-280M-2-90kw	4108Z-113HP	PV 30x9/12HP	PV 30x6/12HP
1000		YE3-315S-2-110kw	6110-150HP	PV 30xII/15HP	PV 30x8/15HP
1250		YE3-315LI-2-160kw	6102ZS-170HP	PV30xII/15HP	PV 30x8/15HP
1500		YE3-315LI-2-160kw	6102ZS-170HP	PV30xII/15HP	PV 30x8/15HP

Other sizes are also available

命 PURITY

Different Sets Can be Customized Depend on your Needs

More Fire Pump Groups are Available

PEDJ—Electric+Diesel+Jockey Pump +Controller

PDJ—Electric+Diesel Pump +Controller

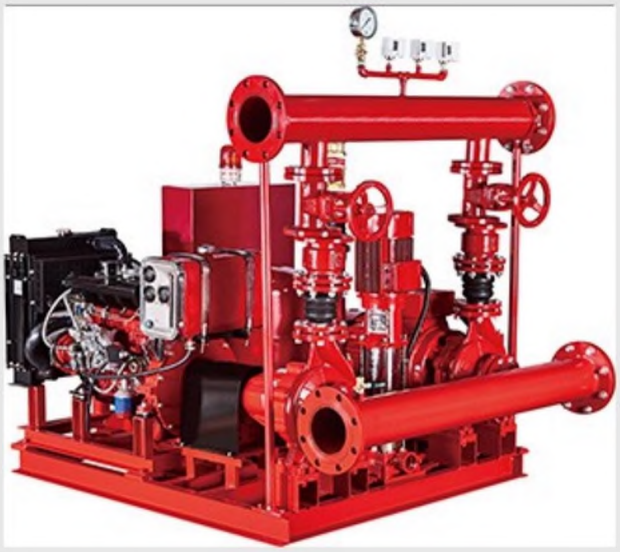

PEDJ--Electric+Diesel+Jockey Pump +Controller with Alarm

PEJ—Electric+Jockey Pump +Controller

PSDT—Diesel Pump+Pressure Tank
+Controller

PEET--2 Vertical Electric Pump
+ Pressure Tank

PEDJT-Electric+Diesel+Jockey Pump
4-Pressure Tank+Controller

PEDT—Electric+Diesel Pump
+ Pressure Tank+Controller

PSCM—Split Case Pump
+ Electric Motor

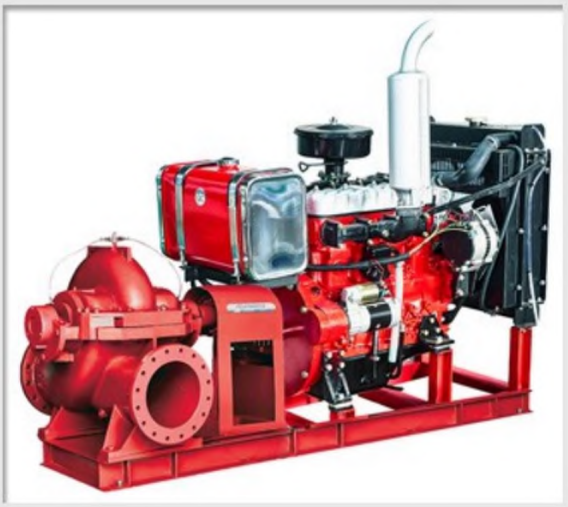

PSCD--Split Case Pump
+ Diesel Engine

Product Specification (60HZ)

Product Description

PEDJ series Skid Mounted Fire Pump System from Purity

PEDJ Fire Pump Set consists of End Suction Centrifugal Pump driven by Electric Motor, End Suction Diesel Pump, and Vertical Jockey Pump.
Pumps are assembled with discharge line accessories as well as Control Panel.

Available **Flow Capacities 50-1500GPM.**
Availabel **Head/Pressure 1-14bar.**
Accessories include Suction pipe, Discharge pipe with Flanges, Battery, Gate Valves, Check Valves, Flexible Expansion Joints, Pressure Switches, Pressure Gauge, Base Frame, etc.

Advantages
0Switch **Automatically** among the three pumps
]Both Manual and Automatic operation is available
0Can work when the power is off
5 Easy Installation
BCustomized size and pump group
®YE3 high **efficient motor** with protection IP55 class F
0High performance and low power consumption
SPump case with Anti-corrosive coating
0With quality **NSK** bearings, wear resistance mechanical seal
SCircuit available up on request
0Different Mounting Styles
! Low Maintenance Cost and available spare parts
@ Electronic battery charger

形 PURITY

Advantages

Energy-saving Certificate

Large Flow Capacity

YE3 Motor IP55 ClassF All Copper Wire

Stainless Steel 304 Impeller & Shaft

Anti-corrosive Coating

NSK Bearing

Costormized Sizes & Pumps

Good Quality & Service 2-Years Guarantee

命 PURITy

Structure

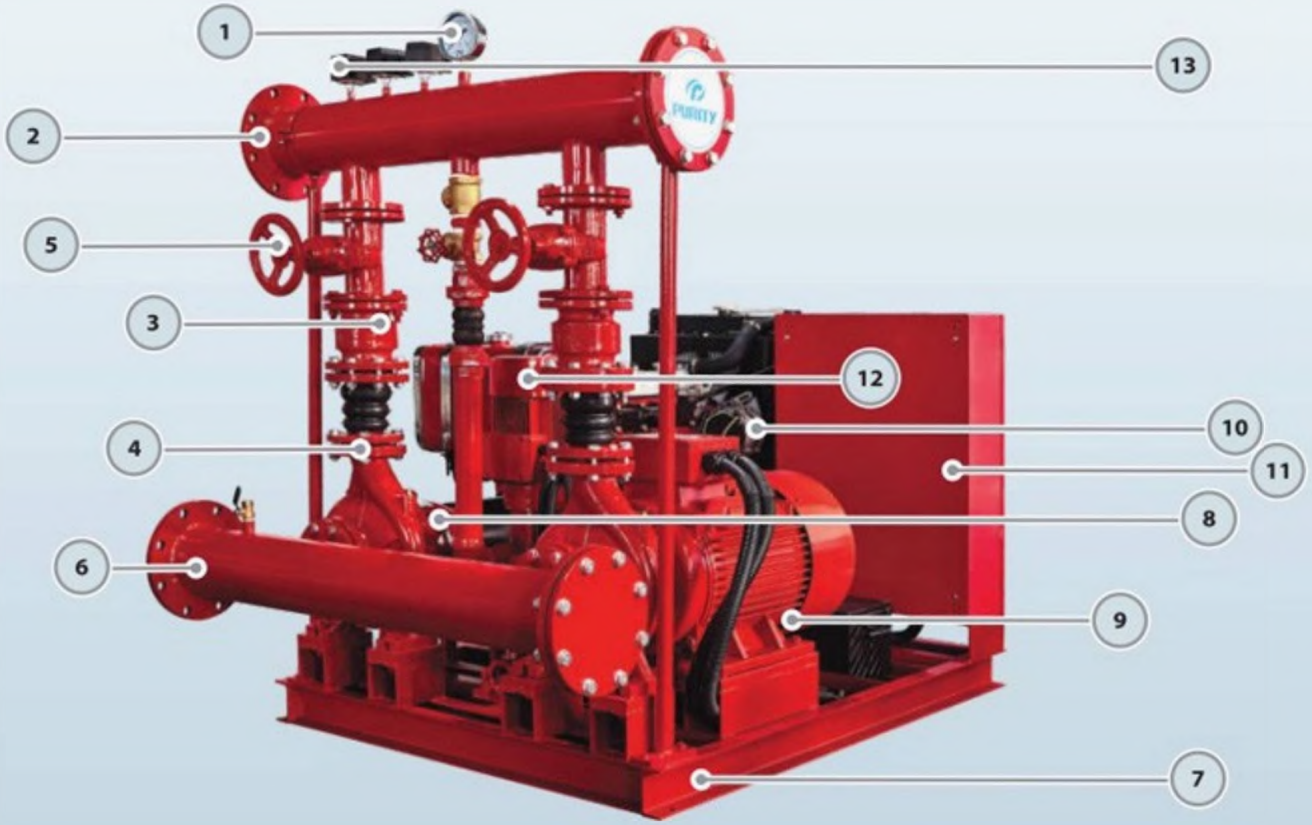

1.Pressure Gauge 2.Dicharge Pipe 3.Check Valve 4.Flexible Joint 5.Gate Valve
6.Suction Pipe 7. Base Frame 8.Pump for Diesel Engine 9.Electric Pump
10.Diesel Engine 11.Control Cabinet 12.Jockey Pump 13.Pressure Switch

命 PURITY

Fire Pump System Models PEDJ

PEDJ 500/ 8 -50-58-5.5

- Jockey Power: 5.5HP
- Diesel Engine Power: 58HP
- Electric Motor Power: 50HP
- Head/Pressure: 8 Bar
- Flow Capacity: 500GPM
- Purity Electric Diesel Jockey

GPM	BAR	REGULAR MODEL	MOTOR PUMP 2900/3500 rpm	PUMP FOR MOTOR &DIESEL ENGINE 2900/3500 rpm
				
50	6	PEDJ50/6-5.5-5.5-2	P2C 32-200/40	PS 32-200/40
80	7	PEDJ80/7-10-8.6-3	PST 32-250/75	PS 32-250/75
100		PEDJ100/7-10-8.6-3	PST 32-250/75	PS 32-250/75
120		PEDJ120/7-10-10-3	PST 32-250/75D	PS 32-250/75H
150		PEDJ150/7-15-10-3	PST 40-250/110	PS 40-250/110
200		PEDJ200/7-20-27-3	PST 40-250/150	PS 40-250/150
250		PEDJ250/7-25-27-4	PST 50-250/185	PS 50-250/185
300		PEDJ300/7-30-32-4	PST 50-250/220	PS 50-250/220
350		PEDJ350/7-30-32-4	PST 50-250/220	PS 50-250/220
400		PEDJ400/7-40-38-5.5	PST 65-250/300	PS 65-250/300
500	8	PEDJ500/8-50-58-5.5	PST 65-250/370	PS 65-250/370
750		PEDJ750/8-75-75-7.5	PST 80-250/550	PS 80-250/550
1000		PEDJ1000/8-100-99-10	PST 100-250/750	PS 100-250/750
1250		PEDJ1250/8-150-130-10	-	PS 125-250/1100
500	10	PEDJ500/10-60-61-7.5	-	PS 65-315/450
750		PEDJ750/10-100-99-10	-	PS 80-315/750
1000		PEDJ1000/10-125-113-12	-	PS 100-315/900
1250		PEDJ1250/10-180-170-15	-	PS 125-315/1320
500	13	PEDJ500/13-100-99-12	-	PS 65-315/750
750		PEDJ750/13-125-113-12	-	PS 80-315/900
1000		PEDJ1OOO/13-15O-13O-15	-	PS 100-315/1100
1250		PEDJ1250/13-220-170-15	-	PS 125-315/1600
1500		PEDJ1500/13-220-170-15	-	PS 125-315/1600

GPM	BAR	MOTOR	DIESEL	JOCKEY	
				 50HZ	60HZ
50	6	-	178-5.5HP	PV4x9/2HP	PV4x6/2HP
80	7	YE3-132S2-2-7.5kw	186-8.6HP	PV6xII/3HP	PV4x6/2HP
100		YE3-132S2-2-7.5kw	186-8.6HP	PV6xII/3HP	PV4x8/3HP
120		YE3-132S2-2-7.5kw	192-10HP	PV6xII/3HP	PV4x8/3HP
150		YE3-160MI-2-IIkw	192-10HP	PV6xII/3HP	PV4x8/3HP
200		YE3-160M2-2-15kw	380-27HP	PV6xII/3HP	PV4x8/3HP
250		YE3-160L-2-18.5kw	380-27HP	PV8xI2/4HP	PV 6x7/3HP
300		YE3-180M-2-22kw	385-32HP	PV8xI2/4HP	PV 8x8/4HP
350		YE3-180M-2-22kw	385-32HP	PV8xI2/4HP	PV 8x8/4HP
400		YE3-200LI-2-30kw	480-38HP	PV 12xI2/5.5HP	PV 12x7/5.5HP
500	8	YE3-200L2-2-37kw	490N-58HP	PV 12xI2/5.5HP	PV 12x7/5.5HP
750		YE3-250M-2-55kw	490Z-75HP	PV 12xI7/7.5HP	PV 12x9/7.5HP
1000		YE3-280S-2-75kw	4102Z-99HP	PV 30x7/10HP	PV 12xII/10HP
1250		YE3-315S-2-110kw	6110-150HP	PV30x7/10HP	PV30x5/10HP
500	10	YE3-225M-2-45kw	490-61HP	PV 12xI7/7.5HP	PV 12x9/7.5HP
750		YE3-280S-2-75kw	4102Z-99HP	PV 30x7/10HP	PV12xII/10HP
1000		YE3-280M-2-90kw	4108Z-113HP	PV 30x9/12HP	PV 30x6/12HP
1250		YE3-315M-2-132kw	6102ZS-170HP	PV 30xII/15HP	PV 30x8/15HP
500	13	YE3-280S-2-75kw	4102Z-99HP	PV 30x9/12HP	PV12xII/10HP
750		YE3-280M-2-90kw	4108Z-113HP	PV 30x9/12HP	PV 30x6/12HP
1000		YE3-315S-2-110kw	6110-150HP	PV 30xII/15HP	PV 30x8/15HP
1250		YE3-315LI-2-160kw	6102ZS-170HP	PV30xII/15HP	PV 30x8/15HP
1500		YE3-315LI-2-160kw	6102ZS-170HP	PV30xII/15HP	PV 30x8/15HP

Other sizes are also available

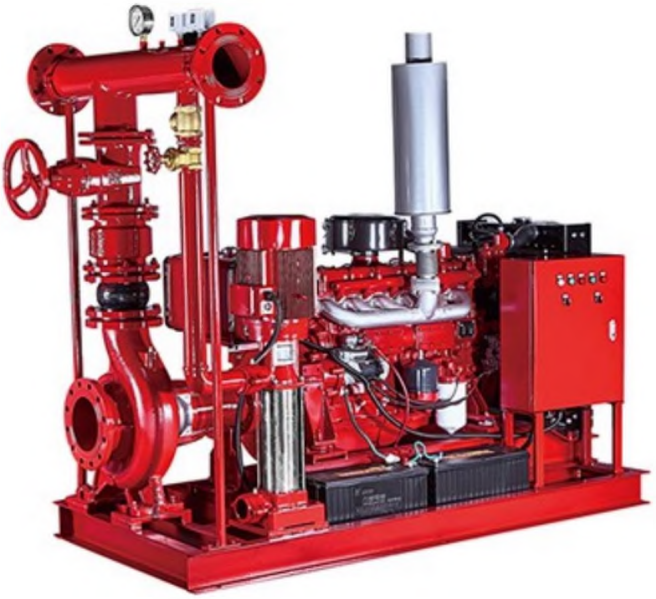

Fire Pump System PSDC

[PSDC]Diesel Engine Pump End Suction Pump with Control Panel for Fire Pump

TECHNICAL DESCRIPTION

■New EN733 standard centrifugal pump

■Original design by PURITY (patented)

■More Environmentally Friendly

■Low Fuel Consumption

■Strong Power

■Easy To Assemble

Product Description

TECHNICAL DESCRIPTION

New vertical multistage centrifugal pump
Original design by PURITY
Suction and discharge port in cast iron G20 thread
Quality NSK bearing, wear resistance mechanical seal

APPLICATIONS

Suitable for use with clean water and liquids that are not chemically aggressive towards the materials from which the pump is made.
The high efficiency and adaptability of these pumps to even the most unusual of applications, makes them ideal for use in the domestic, civil and industrial sectors; in particular for the distribution of water in combination with pressure sets and for pressure boosting.

USING LIMITS

Liquid temperature between -10°C and +120°C
Ambient temperature up to +50°C
Max. working pressure 25 bar
Continuous service SI

MATERIAL DESCRIPTION

MATERIAL DESCRIPTION / ***DESCRIPCI6N DE MATERIAL***

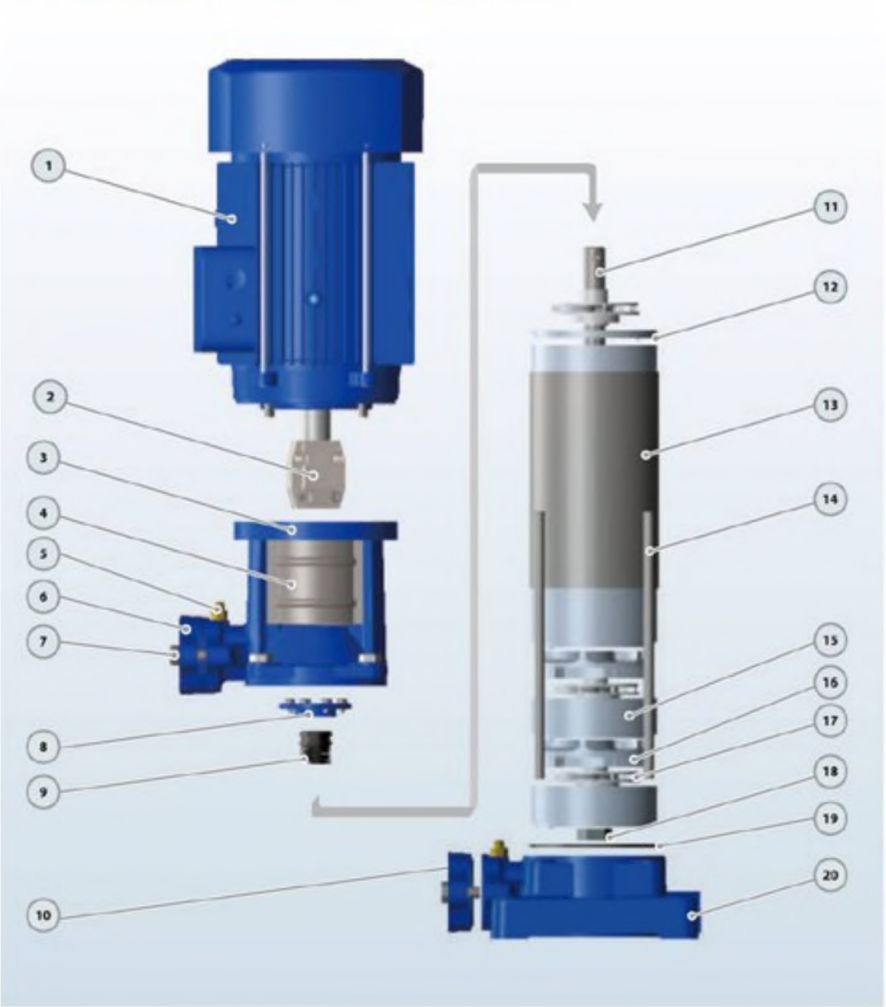

No.	Description *Descripcion*	Material *Material*
1	Motor *Motor*	IP55 Class F *IP5S Close F*
2	Coupfng Un/On	Iron *Hierro*
3	Discharge Body *Cuerpo tmpuisibfi*	Cast iron *Fundicion*
4	Cover *Tapa*	SS304 *ox 304*
S	Release Vahre *Tap6n C&b&do*	Brass *Bronco*
b	Discharge *Impuisidn*	Cast iron *Fundtcion*
7	Bolt *P&rno*	Sted *Ac^ro*
8	Seal Cover Tapa Qerre	Cast iron *FundM^n*
9	Mechanical Soai *Cierre Mec^nico*	SiGCarbon/SS304 *SiC~Grafik>-Inox304*
10	Suction *Aspiracidn*	Cast iron *Fundici6r*
11	Pump Shaft *Eje*	SS304/45# Iren *Inox 304/45H hierro*
12	Diffuser Top Cover *Tope Tops Difusor*	Tecnncpolmer *Tecnopdimero*
13	Punp Ccver *Tapa Bemba*	SS304 *Inox 304*
14	Through Bolt *Porno*	Steel *Aceio*
-	Dffuser Cover *Tapa Dfusof*	Technopofanefwth SS3O4 mg *iGcmpobnsm con Inox anHo*
16	Dffuser *Difusor*	T0Chnopoimefw<hSS3O4rtr) g *Tecnopoltmero con Inox onifo*
17	impeler *Impulsor*	Techncpolmer *TecnopoHmero*
18	Impel er Nut *Tuefca de fmputsor*	Galvanizated Sleel *Aeon Gclvanizodo*
19	O-nn (j *Junta TMca*	Rubber *Caucho*
20	Sucbon Body *Cuerpo Asptnd&i*	Cast iron *Fundtcidn*

DIMENSION AND WEIGHT

PERFORMANCE CURVE / ***CURVAS DEFUNCIONAMIENTO***

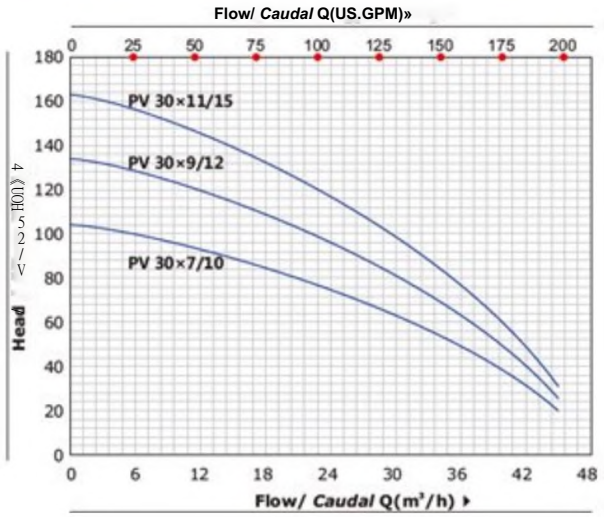

DIMENSIONS AND WEIGHT / ***DIMENSIONS Y PESOS***

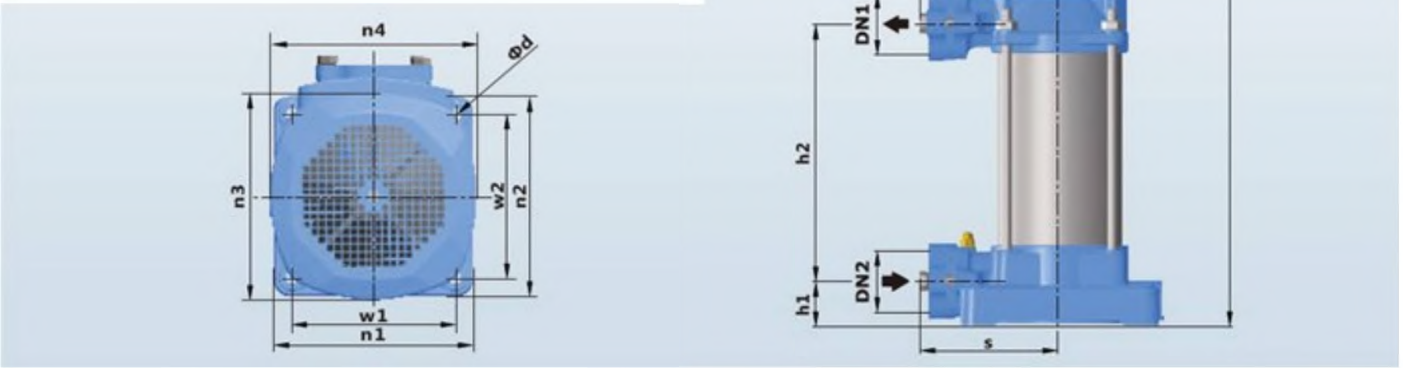

MODEL *MODELO*	DIMENSIONS / *DIMENSIONES* mm															kg	
	DN1	DN2	N	a	s	h	hi	h2	wl	w2	n1	n2	n3	n4	d	1-	3-
PV4x7/1.5	25/32	25/32	7	141	141	720	45.5	261.5	165	165	202	202	175	175	12	28.0	27.0
PV 4x9/2	25/32	25/32	9	141	141	790	45.5	331.5	16S	165	202	202	175	175	12	33.0	32.0
PV 4x13/3	25/32	25/32	13	141	141	930	45.5	471.5	165	165	202	202	175	175	12	38.0	37.0
PV 4x16/4	25/32	25/32	16	141	141	1082	45.5	576.5	16S	165	202	202	195	19S	12	48.0	47.0
PV6x5/1.5	25/32	25/32	S	141	141	650	45.5	191.5	165	165	202	202	175	175	12	26.0	2S.0
PV 6x8/2	25/32	25/32	8	141	141	755	45.5	296.5	16S	165	202	202	175	175	12	31.0	30.0
PV 6x11/3	25/32	25/32	11	141	141	860	45.5	401.5	165	165	202	202	175	175	12	36.0	35.0
PV 6x15/4	25/32	25/32	IS	141	141	1047	45.5	S41.5	16S	165	202	202	195	195	12	46.0	4S.0
PV8x4/1.5	40/50	40/50	4	141	141	615	45.5	156.5	165	165	202	202	175	175	12	26.0	25.0
PV 8x7/2	40/50	40/50	7	141	141	720	4S· S	261.5	16S	16S	202	202	175	175	12	31.0	30.0
PV 8x9/3	40/50	40/50	9	141	141	790	45.5	331.S	16S	16S	202	202	175	175	12	36.0	3S.0
PV 8x12/4	40/50	40/50	12	141	141	942	45.5	436.5	16S	16S	202	202	195	195	12	46.0	4S.0
PV 8x16/5.5	40/50	40/50	16	141	141	1082	45.5	576.5	165	165	202	202	195	195	12	-	50.0
PV 12x3/L5	40/50	40/50	3	141	141	580	45.5	121.5	165	16S	202	202	175	175	12	25.0	24.0
PV 12x5/2	40/50	40/50	5	141	141	650	45.5	191.5	165	16S	202	202	175	175	12	30.0	29.0
PV 12x7/3	40/50	40/50	7	141	141	720	45.5	261.5	165	16S	202	202	175	175	12	35.0	34.0
PV 12x9/4	40/50	40/50	9	141	141	837	45.5	331.5	165	165	202	202	195	195	12	45.0	44.0
PV 12x12/5.5	40/50	40/50	12	141	141	942	45.5	4J6.5	165	16S	202	202	195	195	12	-	50.0
PV 12x17/7.5	40/50	40/50	17	141	141	1167	45.5	611.5	16S	165	202	202	204	204	12	-	60.0
PV 30x7/10	50/65	50/65	7	170	170	1046	62	416	187	187	230	230	260	260	12	-	86.0
PV 30x9/12	50/65	50/65	9	170	170	1153	62	523	187	187	230	230	260	260	12	-	92.0
PV 30xII/IS	50/65	50/65	11	170	170	1260	62	630	187	187	230	230	260	260	12	-	100

PD

TECHNICAL DESCRIPTION

More Environmentally Friendly
Meeting China III Emission Standard
Low Fuel Consumption
Strong Power
Easy To Assemble

APPLICATIONS

Suitable for use with clean water and liquids that are not chemically aggressive towards the materials from which the pump is made.
The diesel engine pumps are recommended for use in water supply, cleaning sets, pressure boosting, firefighting sets, irrigation, industrial applications, water circulation in climatisation sets, agricultural.

USING LIMITS

Liquid temperature between -10°C and +120°C
Ambient temperature up to +50°C
Max. working pressure 16 bar
Continuous service SI

TECHNICAL DATA

TECHNICAL DATA / ***DATOS TtCNICOS***

Model	178	186	188	192	380	385	480	485	490N	490	495
Type	Single-cylinder;4-stroke,air-cooled				Direct Injection, Water-cooling, Four Stroke						
Intake Type	Naturally Aspirated										
Bore*Stroke(mm*mm)	78*62	86*72	88*75	92*75	80*90	85*90	80*90	85*100	90*100	90*105	95*105
Cylinder No.	1	1	1	1	3	3	4	4	4	4	4
Displacement (L)	0.296	0.418	0.456	0.499	1357	1.532	1.8	2.27	2.54	2.67	2.977
Rated Power/ Speed(kW/r/min)	3.7/3000 4.0/3600	5.7/3000 6.3/3600	6.6/3000 7.2/3600	7.5/3000 8.2/3600	20/3000	24/3000	28/3000	36/3000	42/3000	45/3000	50/3000
Horse Power	5.0/3000 5.5/3600	7.8/3000 8.6/3600	9.0/3000 10.0/3600	10.2/3000 12.0/3600	27	32	38	49	58	61	68
Power Coverage(kW)	≤11	名11	^11	Sil	£37	S37	S37	名55	£55	^55	≤75

Model	498	4102	4105	4108	485Z	490NZ	490Z	498Z	4102Z	4105Z	4108Z
Type	Direct Injection. Water-coding，Four Stroke										
Intake Type	Naturally Aspirated				TUrbo-charging						
Bore*Stroke(mm*mm)	98*105	102*118	105*118	108*118	85*100	90H00	90*105	98*105	102*118	105*118	108U18
Cylinder No.	4	4	4	4	4	4	4	4	4	4	4
Displacement (L)	3.168	3.857	4.087	4.324	2.27	2.54	2.67	3.168	3.857	4.087	4.324
Rated Power/ Speed (kW/r/min)	54/3000	62/3000	67/3000	73/3000	44/3000	50/3000	55/3000	60/3000	73/3000	75/3000	83/3000
Horse Power	73	85	91	99	60	68	75	81	99	102	113
Power Coverage(kW)	^75	£100	^100	≤100	i5S	155	^55	£75	^100	£100	≤100

Product Specification (60HZ)

Product Description

PV
TECHNICAL DESCRIPTION

TECHNICAL DESCRIPTION

New vertical multistage centrifugal pump
Original design by PURITY
Suction and discharge port in cast iron G20 thread
Quality NSK bearing, wear resistance mechanical seal

APPLICATIONS

Suitable for use with clean water and liquids that are not chemically aggressive towards the materials from which the pump is made.
The high efficiency and adaptability of these pumps to even the most unusual of applications, makes them ideal for use in the domestic, civil and industrial sectors; in particular for the distribution of water in combination with pressure sets and for pressure boosting.

USING LIMITS

Liquid temperature between -10°C and +120°C
Ambient temperature up to +50°C
Max. working pressure 25 bar
Continuous service SI

MATERIAL DESCRIPTION

MATERIAL DESCRIPTION / ***DESCRIPCI6N DE MATERIAL***

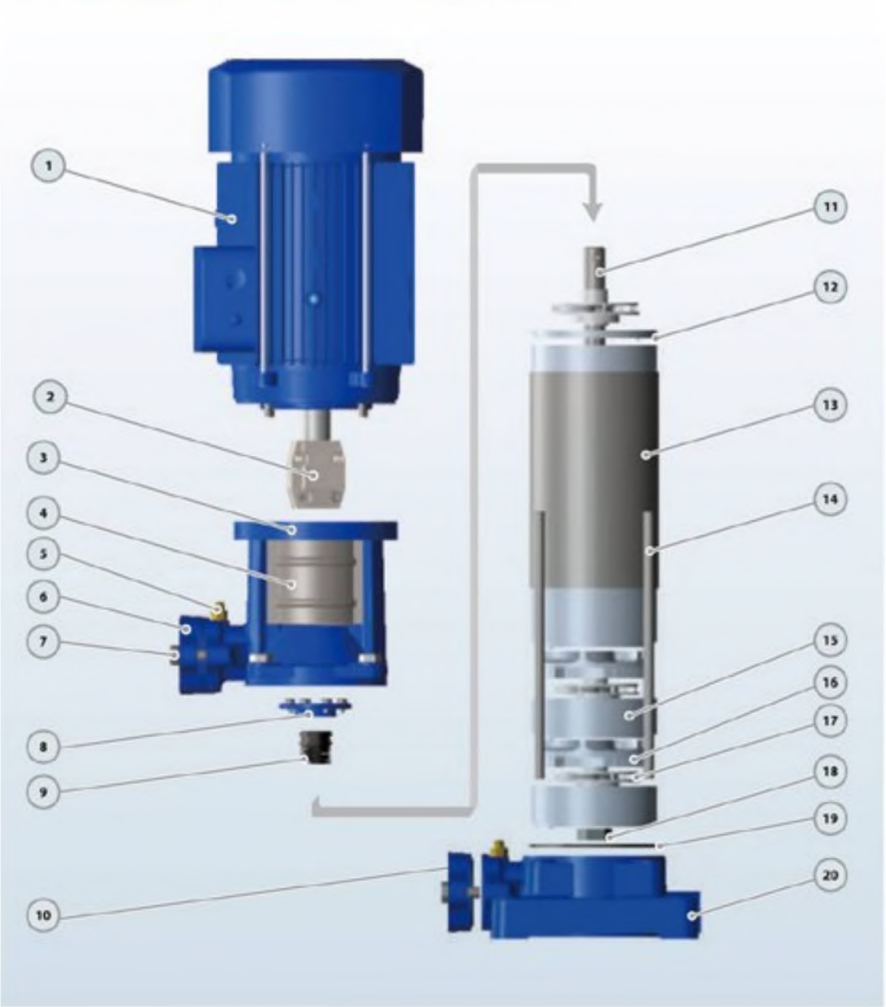

No.	Description *Descripcion*	Material *Material*
1	Motor *Motor*	IP55 Class F *IP5S Close F*
2	Coupfng Un/On	Iron *Hierro*
3	Discharge Body *Cuerpo tmpuisibfi*	Cast iron *Fundicion*
4	Cover *Tapa*	SS304 *ox 304*
S	Release Vahre *Tap6n C&b&do*	Brass *Bronco*
b	Discharge *Impuisidn*	Cast iron *Fundtcion*
7	Bolt *P&rno*	Sted *Ac^ro*
8	Seal Cover Tapa Qerre	Cast iron *FundM^n*
9	Mechanical Soai *Cierre Mec^nico*	SiGCarbon/SS304 *SiC~Grafik>-Inox304*
10	Suction *Aspiracidn*	Cast iron *Fundici6r*
11	Pump Shaft *Eje*	SS304/45# Iren *Inox 304/45H hierro*
12	Diffuser Top Cover *Tope Tops Difusor*	Tecnncpolmer *Tecnopdimero*
13	Punp Ccver *Tapa Bemba*	SS304 *Inox 304*
14	Through Bolt *Porno*	Steel *Aceio*
-	Dffuser Cover *Tapa Dfusof*	Technopofanefwth SS3O4 mg *iGcmpobnsm con Inox anHo*
16	Dffuser *Difusor*	T0Chnopoimefw<hSS3O4rtr) g *Tecnopoltmero con Inox onifo*
17	impeler *Impulsor*	Techncpolmer *TecnopoHmero*
18	Impel er Nut *Tuefca de fmputsor*	Galvanizated Sleel *Aeon Gclvanizodo*
19	O-nn (j *Junta TMca*	Rubber *Caucho*
20	Sucbon Body *Cuerpo Asptnd&i*	Cast iron *Fundtcidn*

DIMENSION AND WEIGHT

PERFORMANCE CURVE / ***CURVAS DEFUNCIONAMIENTO***

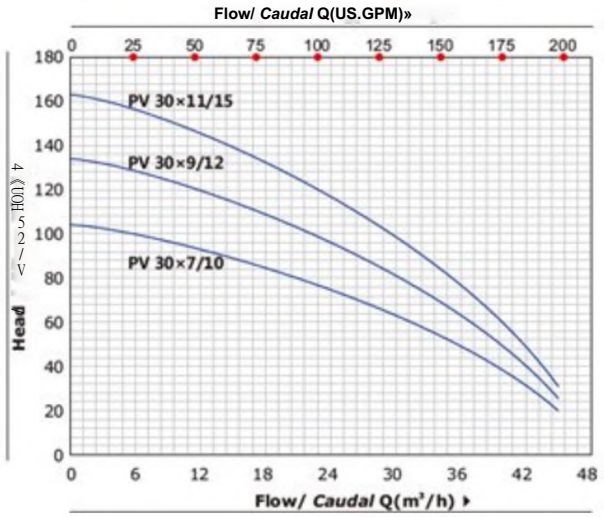

DIMENSIONS AND WEIGHT / ***DIMENSIONS Y PESOS***

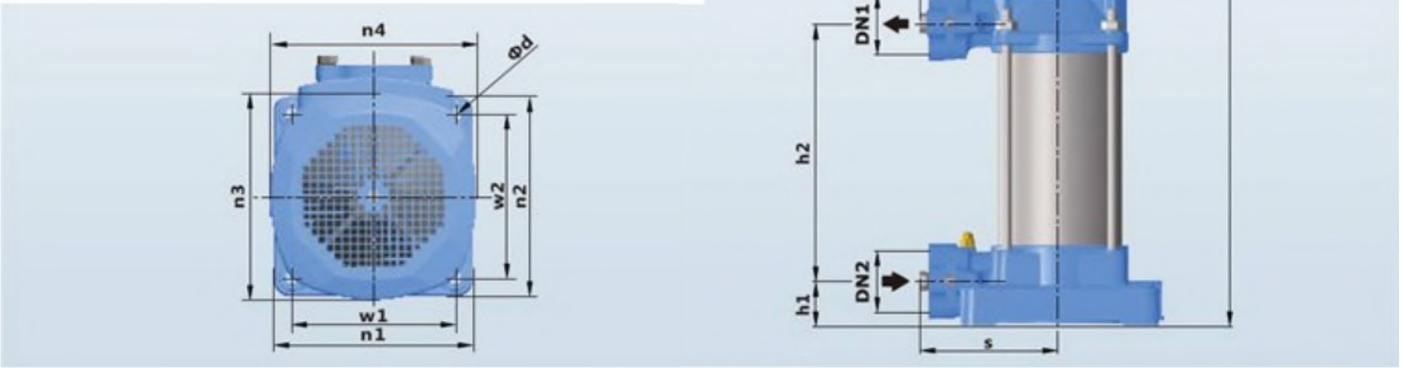

MODEL *MODELO*	DIMENSIONS / *DIMENSIONES* mm															kg	
	DN1	DN2	N	a	s	h	hi	h2	wl	w2	n1	n2	n3	n4	d	1-	3-
PV4x7/1.5	25/32	25/32	7	141	141	720	45.5	261.5	165	165	202	202	175	175	12	28.0	27.0
PV 4x9/2	25/32	25/32	9	141	141	790	45.5	331.5	16S	165	202	202	175	175	12	33.0	32.0
PV 4x13/3	25/32	25/32	13	141	141	930	45.5	471.5	165	165	202	202	175	175	12	38.0	37.0
PV 4x16/4	25/32	25/32	16	141	141	1082	45.5	576.5	16S	165	202	202	195	19S	12	48.0	47.0
PV6x5/1.5	25/32	25/32	S	141	141	650	45.5	191.5	165	165	202	202	175	175	12	26.0	2S.0
PV 6x8/2	25/32	25/32	8	141	141	755	45.5	296.5	16S	165	202	202	175	175	12	31.0	30.0
PV 6x11/3	25/32	25/32	11	141	141	860	45.5	401.5	165	165	202	202	175	175	12	36.0	35.0
PV 6x15/4	25/32	25/32	IS	141	141	1047	45.5	S41.5	16S	165	202	202	195	195	12	46.0	4S.0
PV8x4/1.5	40/50	40/50	4	141	141	615	45.5	156.5	165	165	202	202	175	175	12	26.0	25.0
PV 8x7/2	40/50	40/50	7	141	141	720	4S· S	261.5	16S	16S	202	202	175	175	12	31.0	30.0
PV 8x9/3	40/50	40/50	9	141	141	790	45.5	331.S	16S	16S	202	202	175	175	12	36.0	3S.0
PV 8x12/4	40/50	40/50	12	141	141	942	45.5	436.5	16S	16S	202	202	195	195	12	46.0	4S.0
PV 8x16/5.5	40/50	40/50	16	141	141	1082	45.5	576.5	165	165	202	202	195	195	12	-	50.0
PV 12x3/L5	40/50	40/50	3	141	141	580	45.5	121.5	165	16S	202	202	175	175	12	25.0	24.0
PV 12x5/2	40/50	40/50	5	141	141	650	45.5	191.5	165	16S	202	202	175	175	12	30.0	29.0
PV 12x7/3	40/50	40/50	7	141	141	720	45.5	261.5	165	16S	202	202	175	175	12	35.0	34.0
PV 12x9/4	40/50	40/50	9	141	141	837	45.5	331.5	165	165	202	202	195	195	12	45.0	44.0
PV 12x12/5.5	40/50	40/50	12	141	141	942	45.5	4J6.5	165	16S	202	202	195	195	12	-	50.0
PV 12x17/7.5	40/50	40/50	17	141	141	1167	45.5	611.5	16S	165	202	202	204	204	12	-	60.0
PV 30x7/10	50/65	50/65	7	170	170	1046	62	416	187	187	230	230	260	260	12	-	86.0
PV 30x9/12	50/65	50/65	9	170	170	1153	62	523	187	187	230	230	260	260	12	-	92.0
PV 30xII/IS	50/65	50/65	11	170	170	1260	62	630	187	187	230	230	260	260	12	-	100

PD

TECHNICAL DESCRIPTION

More Environmentally Friendly
Meeting China III Emission Standard
Low Fuel Consumption
Strong Power
Easy To Assemble

APPLICATIONS

Suitable for use with clean water and liquids that are not chemically aggressive towards the materials from which the pump is made.
The diesel engine pumps are recommended for use in water supply, cleaning sets, pressure boosting, firefighting sets, irrigation, industrial applications, water circulation in climatisation sets, agricultural.

USING LIMITS

Liquid temperature between -10°C and +120°C

Ambient temperature up to +50°C
Max. working pressure 16 bar
Continuous service SI

TECHNICAL DATA

TECHNICAL DATA / ***DATOS TtCNICOS***

Model	**178**	**186**	**188**	**192**	**380**	**385**	**480**	**485**	**490N**	**490**	**495**
Type	Si ngle-cylindef；4-stroke.air-cooled				Direct Injection, Water-cooling, Four Stroke						
Intake Type	Naturally Aspirated										
Bore*Stroke(mm*mm)	78*62	86*72	88*75	92*75	80*90	85*90	80*90	85*100	90*100	90*105	95*105
Cylinder No.	1	1	1	1	3	3	4	4	4	4	4
Displacement (L)	0.296	0.418	0.456	0.499	1.357	1.532	1.8	2.27	2.54	2.67	2.977
Rated Power/ Speed (kW/r/min)	3.7/3000 4.0/3600	5.7/3000 6.3/3600	6.6/3000 7.2/3600	7.5/3000 8.2/3600	20/3000	24/3000	28/3000	36/3000	42/3000	45/3000	50/3000
Horse Power	5.0/3000 5.5/3600	7.8/3000 8.6/3600	9.0/3000 10.0/3600	10.2/30C0 12.0/3600	27	32	38	49	58	61	68
Power Coverage(kW)	≤11	≤11	名11	或n	£37	名37	£37	彡55	^55	S55	名75

Model	**498**	**4102**	**4105**	**4108**	**485Z**	**490NZ**	**490Z**	**498Z**	**4102Z**	**4105Z**	**4108Z**
Type	Direct Injection. Water-cooling, Four Stroke										
Intake Type	Naturally Aspirated				7urtx>-charging						
Bore*Stroke(mm*mm)	98*105	102*118	105*118	108*118	85*100	90*100	90*105	98*105	102*118	105*118	108U18
Cylinder No.	4	4	4	4	4	4	4	4	4	4	4
Displacement (L)	3.168	3.857	4.087	4.324	2.27	2.54	2.67	3.168	3.857	4.087	4.324
Rated Power/ Speed (kW/r/min)	54/3000	62/3000	67/3000	73/3000	44/3000	50/3000	55/3000	60/3000	73/3000	75/3000	83/3000
Horse Power	73	85	91	99	60	68	75	81	99	102	113
Power Coverage(kW)	^75	£100	^100	£100	^55	iS5	^55	^75	^100	^100	^100

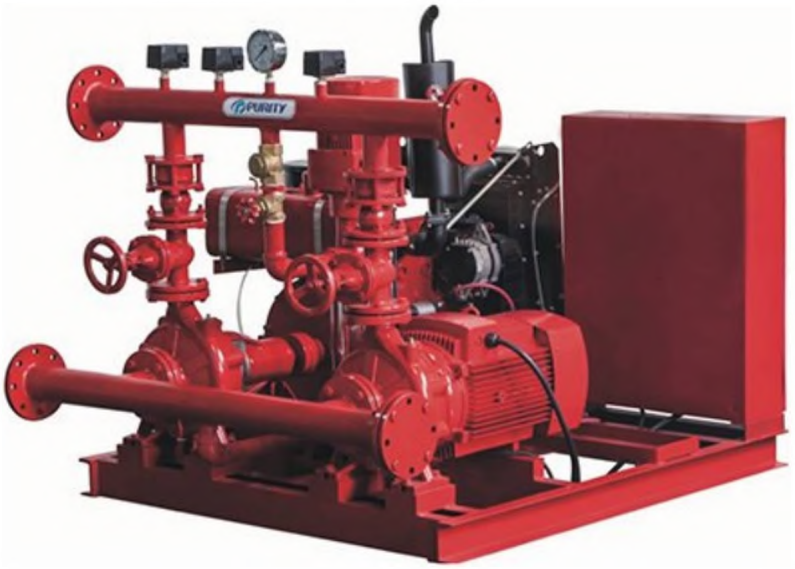

Fire Pump System PEDJ

Fire Fighting Pump Set Electric Diesel Jockey Pump

TECHNICAL DESCRIPTION

■Original design by PURITY (patented)

■Both square motor & round motor available

•YE3 high efficient motor, with protection IP55 class F

•Pump case with anti-corrosive coating

■Quality NSK bearing

•Pump case with anti-corrosive coating

■Impeller in stainless steel AISI 304 or cast iron

■Shaft in stainless steel AISI 304 or galvanized iron

■Galvanized counter flange with bolts, nuts and gaskets

Product Specification (50HZ)

Product Description

The fire fighting system consists of **electric pump, diesel pump,** jockey pump and control panel.

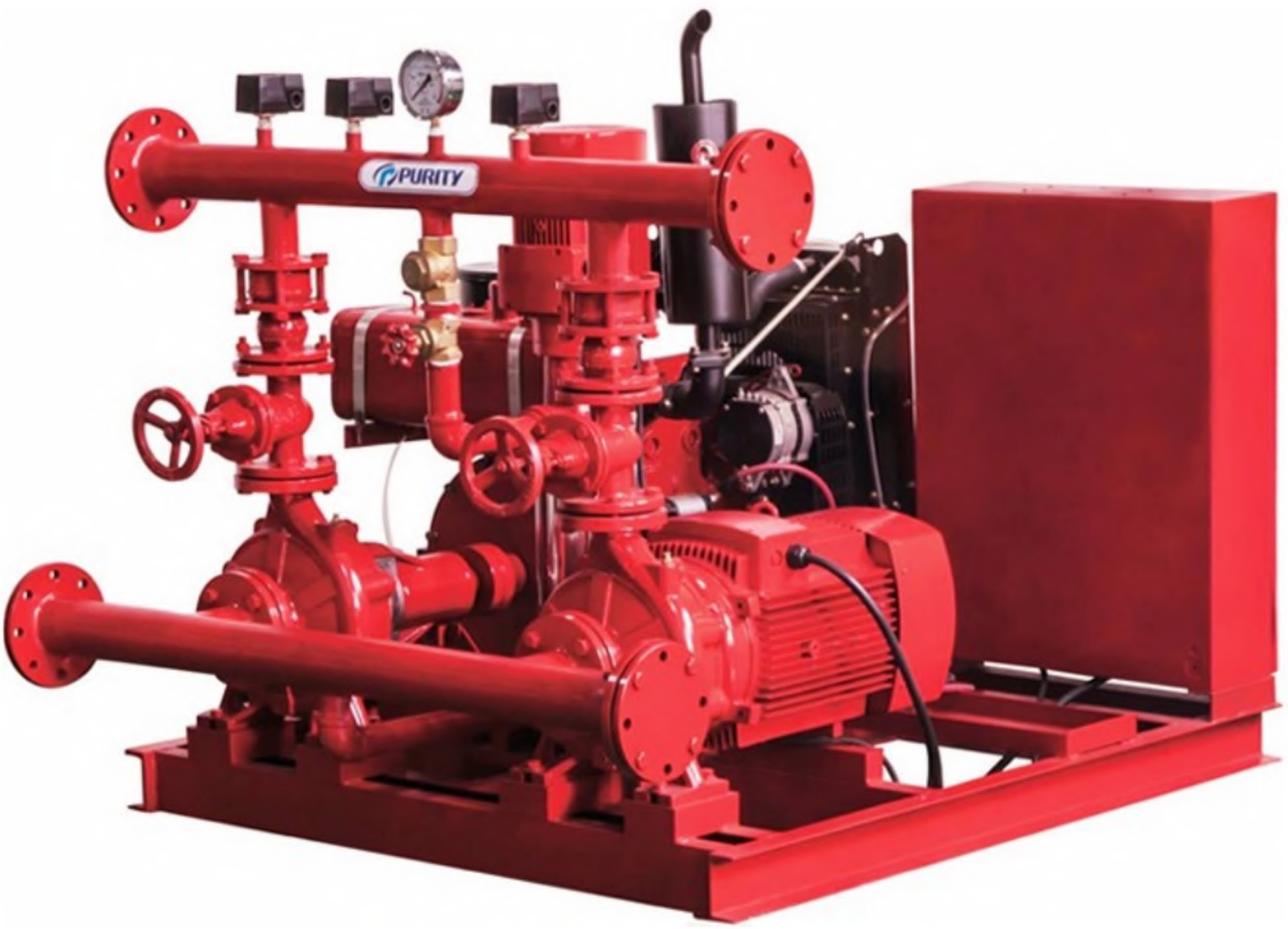

Electric Pump(PST or PSM)

Usable Pump- Single stage pump, end suction pump, horizontal open pump, multistage pump,

Pump case can made of cast iron or stainless steel.

Impeller can adopt copper impeller

Diesel Pump (PSD)

Flow head and pressure or other parameters are the same as the electric pump,
The diesel engine is connected to the pump head through the coupling.
The diesel pump includes Radiator, base frame, PTO shaft, stop solenoid(WOODWARD), vibration absorb, air filter, controller, muffler, tool box, plywood case

Jockey Pump (PV)

Vertical pump type.
The technical parameters is different from the electric or diesel pump, can also be customized.

Fire Pump Control Panel

Fire Pump Control Panel is the Pump System brain that designed to Control & Monitor the operation of the Electric, Diesel, and Jockey Pumps Drivers, and makes up pumps for both Manual & Automatic models, as well as turns pumps drivers ON/OFF under specific conditions.

Spare Parts

Accessories include Suction pipe, Discharge pipe with Flanges, Battery, Gate Valves, Check Valves,Flexible Expansion Joints,Pressure Switches, Pessure Gauge, Base Frame,etc

Hot Sale Types

GPM	Bar	REGULAR MODEL	EIECTRIC PUMP	DIESEL PUMP	JOCKEY PUMP	MOTOR
200	7	PEDJ200/7-20-27-3	PST 50-250/158	PSD 40-250-150	PV 6X11-3HP	15KW
250	7	PEDJ250/7-25-27-4	PST 50-250/185	PSD 50-250/185	PV 8X12-4HP	18.5KW
350	7	PEDJ350/7-30-32-4	PST 50-250/220	PSD 50-250/220	PV 8X12-4HP	22KW
500	8	PEDJ500/8-50-58-5.5	PST 65-250/370	PSD 65-250/370	PV 12X1^_^ 5Hp	37KW
750	8	PEDJ750/8-75-75-7.5	PST 80-250/550	PSD 80-250/550	PV 12X1^^ 5Hp	55KW
...	...	...	...			...

Other sizes can provide on request.

Technical Data

TECHNICAL DATA / *DATOS T^CNICOS*

GPM	BAR	REGULAR MODEL *MODELO REGULAR*	MOTOR PUMP *MOTOBOMBA*	PUMP FOR ELECTRIC *BOMBA PARA ELECTRICiDAD* 2900rpm	PUMP FOR DIESEL *BOMBA PARA DIESEL* 2900rpm
					
50	6	PEDJ50/6-55-5.5-2	P2C 32-200/40	-	PS 32-200/40
80	7	PEDJ80/7-10-8^-3	PST 32-250/75	PS 32-250/75	PS 32-250/75
100		PEDJ100/7-10-8.6-3	PST 32-250/75	PS 32-250/75	PS 32-250/75
120		PEDJ120/7-10-10-3	PST 32-250/75D	PS 32-250/75H	PS 32-2SQ/75H
150		PEDJ150/7-15-10-3	PST 40-250/110	PS 40-250/HO	PS 40-250/110
200		PEDJ200/7-20-27-3	PST 40-250/150	PS 40-250/150	PS 40-250/150
250		PEDJ250/7-25-27-4	PST 50-250/185	PS 50-250/185	PS 50-2S0/18S
300		PEDJ300/7-30-32-4	PST 50-250/220	PS 50-250/220	PS 50-250/220
350		PEDJ350/7-30-32-4	PST 50-250/220	PS 50-250/220	PS 50-250/220
400		PEDJ400/7-40-38-5.5	PST 65-250/300	PS 65-2S0/30O	PS 65-250/300
500	ô	PEDJ500/8-50-S8-55	PST 65-2S0/370	PS 65-250/370	PS 65-250/370
750		PEDJ750/8-75-75-7S	PST 8O-2S0/550	PS 80-250/550	PS 80-250/550
1000		PEDJ1000/8-100-99-10	PST 100-250/750	PS 100-250/750	PS 100-250/750
1250		PEDJ1250/8-150-130-10	-	PS 125-250/1100	PS 125-250/1100
500	10	PEDJ500/1G-60-61-7.5	-	PS 65-315/450	PS 65-315/450
750		P£DJ750/10-100-99-10	-	PS 80-315/750	PS 80-315/750
1000		PEDJ1000/1G-125-113-12	-	PS 100-315/900	PS 100-315/900
1250		PEDJ125O/1O-18O-17O-15	-	PS 125-315/1320	PS 125-315/1320
500	13	PEDJ500/13-100-99-12	-	PS 65-315/750	PS 65-315/750
750		PEDJ75O/13-125-113-12	-	PS 80-315/900	PS 80-315/900
1000		PEDJ1000/13-150-130-15	-	PS 100-315/1100	PS 100-315/1100
1250		PEDJ1250/13-220-170-15	-	PS 125-315/1600	PS 125-315A600
1S00		PEDJ15OO/13-22O-17O15	-	PS 125-315/1600	PS 125-315/1600

TECHNICAL DATA / *DATOS T(CNfCOS*

GPM	BAR	PUMP COUPLING MOTOR *MOTOR CONEXI^N DE LA BOMBA*	MOTOR *MOTOR*	DIESEL *DIESEL*	JOCKEY *JOCKEY*
				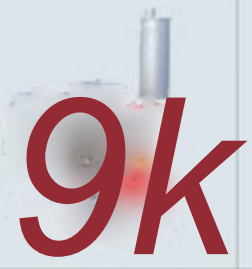	
50	6	-	-	178-55HP	PV4x9/2HP
80	7	PSM 32-250/75	YE3-132S2-2-7.5kw	186-8.6HP	PV6xII/3HP
100		PSM 32-250/75	YE3-132S2-2-7.5kw	186-8.6HP	PV6xII/3HP
120		PSM 32-250/75H	YE3-132S2-2-7.5kw	192-10HP	PV6xII/3HP
150		PSM 40-250/110	YE3-160MI-2-IIkw	192-10HP	PV6«11/3HP
200		PSM 40-250/150	YE3-160M2-2-15kw	380-27HP	PV6xII/3HP
2S0		PSM 50-250/185	YE3-160L-2-18.5kw	380-27HP	PV8xI2/4HP
300		PSM 50-250/220	YE3180M-2-22kw	38S-32HP	PV8«12/4HP
350		PSM 50-250/220	YE3180M-2-22kw	385-32HP	PV8xI2/4HP
400		PSM 65-250/300	YE3-200LI-2-30kw	480-38HP	PV 12x12/5.5HP
SOO	8	PSM 65-250/370	YE3-200L2-2-37kw	490N-58HP	PV 12x12/5.SHP
750		PSM 8O-2S0/550	YE3-25OM-2-55kw	490Z-7SHP	PV 12xI7/7.SHP
1000		PSM 100-250/750	YE3-280S-2-75kw	4102Z-99HP	PV 30x7/1 OHP
1250		PSM 125-250A100	YE3-315S-2-110kw	6102Q-130HP	PV 3Ox7A0HP
SOO	10	PSM 65-315/450	YE3-22SM-2-45kw	490-61HP	PV 12xI7/7.5HP
750		PSM 80-315/750	YE3-280S-2-75kw	4102Z-99HP	PV 30x7/10HP
1000		PSM 100-315/900	YE3-280M-2-90kw	4108Z-113HP	PV 3O«9/12HP
1250		PSM 125-315/1320	YE3-315M2132kw	6102ZS-170HP	PV30xII/15HP
500	13	PSM 65-315/750	Y£3-280S-2-75kw	4102Z-99HP	PV 30x9/12HP
750		PSM 80-315/900	YE3-280M-2-90kw	4108Z-113HP	PV 30x9/12HP
1000		PSM 100-315/1100	YE3-315$-2-110kw	6102Q130HP	PV30xII/ISHP
1250		PSM 125-315/1600	YE3-315LI-2-160kw	6102ZS-170HP	PV30xII/15HP
1500		PSM 125-315/1600	YE3-315LI-2-160kw	6102ZS-170HP	PV30xII/15HP

Product Specification (60HZ)

Product Description

The fire fighting system consists of **electric pump, diesel pump,** jockey pump and control panel.

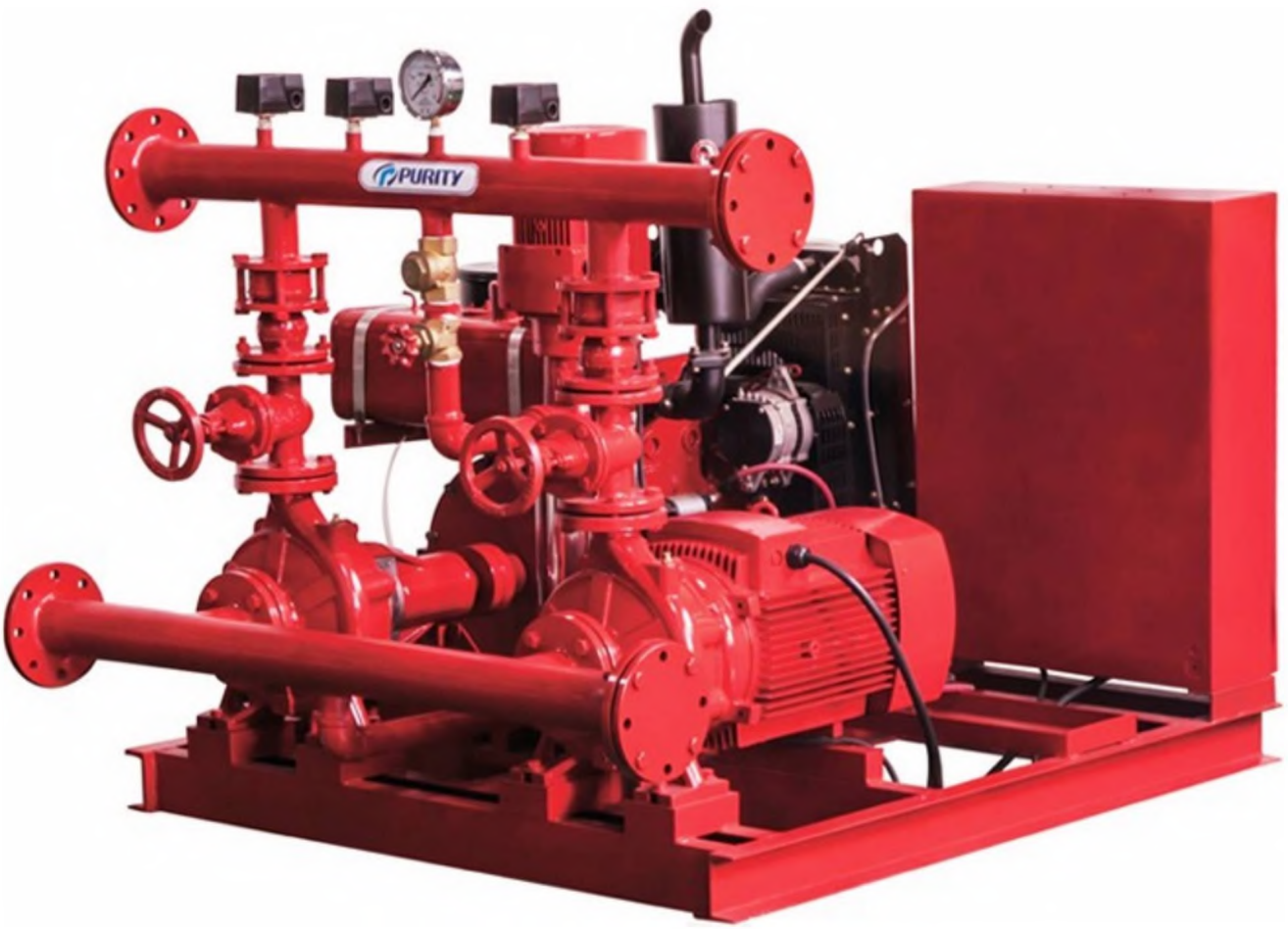

Electric Pump(PST or PSM)

Usable Pump- Single stage pump, end suction pump, horizontal open pump, multistage pump,

Pump case can made of cast iron or stainless steel.

Impeller can adopt copper impeller

Diesel Pump (PSD)

Flow head and pressure or other parameters are the same as the electric pump,
The diesel engine is connected to the pump head through the coupling.
The diesel pump includes Radiator, base frame, PTO shaft, stop solenoid(WOODWARD), vibration absorb, air filter, controller, muffler, tool box, plywood case

Jockey Pump (PV)

Vertical pump type.
The technical parameters is different from the electric or diesel pump, can also be customized.

Fire Pump Control Panel

Fire Pump Control Panel is the Pump System brain that designed to Control & Monitor the operation of the Electric, Diesel, and Jockey Pumps Drivers, and makes up pumps for both Manual & Automatic models, as well as turns pumps drivers ON/OFF under specific conditions.

Spare Parts

Accessories include Suction pipe, Discharge pipe with Flanges, Battery, Gate Valves, Check Valves,Flexible Expansion Joints,Pressure Switches, Pessure Gauge, Base Frame,etc

Hot Sale Types

GPM	Bar	REGULAR MODEL	EIECTRIC PUMP	DIESEL PUMP	JOCKEY PUMP	MOTOR
200	7	PEDJ200/7-20-27-3	PST 50-250/158	PSD 40-250-150	PV 6X11-3HP	15KW
250	7	PEDJ250/7-25-27-4	PST 50-250/185	PSD 50-250/185	PV 8X12-4HP	18.5KW
350	7	PEDJ350/7-30-32-4	PST 50-250/220	PSD 50-250/220	PV 8X12-4HP	22KW
500	8	PEDJ500/8-50-58-5.5	PST 65-250/370	PSD 65-250/370	PV 12X1^_^ 5Hp	37KW
750	8	PEDJ750/8-75-75-7.5	PST 80-250/550	PSD 80-250/550	PV 12X1^^ 5Hp	55KW
...	...	...	...			...

Other sizes can provide on request.

Technical Data

TECHNICAL DATA / *DATOS T^CNICOS*

GPM	BAR	REGULAR MODEL *MODELO REGULAR*	MOTOR PUMP *MOTOBOMBA*	PUMP FOR ELECTRIC *BOMBA PARA ELECTRICiDAD* 2900rpm	PUMP FOR DIESEL *BOMBA PARA DIESEL* 2900rpm
					
50	6	PEDJ50/6-55-5.5-2	P2C 32-200/40	-	PS 32-200/40
80	7	PEDJ80/7-10-8^-3	PST 32-250/75	PS 32-250/75	PS 32-250/75
100		PEDJ100/7-10-8.6-3	PST 32-250/75	PS 32-250/75	PS 32-250/75
120		PEDJ120/7-10-10-3	PST 32-250/75D	PS 32-250/75H	PS 32-2SQ/75H
150		PEDJ150/7-15-10-3	PST 40-250/110	PS 40-250/HO	PS 40-250/110
200		PEDJ200/7-20-27-3	PST 40-250/150	PS 40-250/150	PS 40-250/150
250		PEDJ250/7-25-27-4	PST 50-250/185	PS 50-250/185	PS 50-2S0/18S
300		PEDJ300/7-30-32-4	PST 50-250/220	PS 50-250/220	PS 50-250/220
350		PEDJ350/7-30-32-4	PST 50-250/220	PS 50-250/220	PS 50-250/220
400		PEDJ400/7-40-38-5.5	PST 65-250/300	PS 65-2S0/30O	PS 65-250/300
500	ô	PEDJ500/8-50-S8-55	PST 65-2S0/370	PS 65-250/370	PS 65-250/370
750		PEDJ750/8-75-75-7S	PST 8O-2S0/550	PS 80-250/550	PS 80-250/550
1000		PEDJ1000/8-100-99-10	PST 100-250/750	PS 100-250/750	PS 100-250/750
1250		PEDJ1250/8-150-130-10	-	PS 125-250/1100	PS 125-250/1100
500	10	PEDJ500/1G-60-61-7.5	-	PS 65-315/450	PS 65-315/450
750		P£DJ750/10-100-99-10	-	PS 80-315/750	PS 80-315/750
1000		PEDJ1000/1G-125-113-12	-	PS 100-315/900	PS 100-315/900
1250		PEDJ125O/1O-18O-17O-15	-	PS 125-315/1320	PS 125-315/1320
500	13	PEDJ500/13-100-99-12	-	PS 65-315/750	PS 65-315/750
750		PEDJ75O/13-125-113-12	-	PS 80-315/900	PS 80-315/900
1000		PEDJ1000/13-150-130-15	-	PS 100-315/1100	PS 100-315/1100
1250		PEDJ1250/13-220-170-15	-	PS 125-315/1600	PS 125-315A600
1S00		PEDJ15OO/13-22O-17O15	-	PS 125-315/1600	PS 125-315/1600

TECHNICAL DATA / *DATOS T(CNfCOS*

GPM	BAR	PUMP COUPLING MOTOR *MOTOR CONEXI^N DE LA BOMBA*	MOTOR *MOTOR*	DIESEL *DIESEL*	JOCKEY *JOCKEY*
				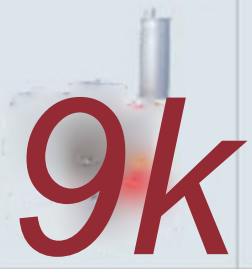	
50	6	-	-	178-55HP	PV4x9/2HP
80	7	PSM 32-250/75	YE3-132S2-2-7.5kw	186-8.6HP	PV6xII/3HP
100		PSM 32-250/75	YE3-132S2-2-7.5kw	186-8.6HP	PV6xII/3HP
120		PSM 32-250/75H	YE3-132S2-2-7.5kw	192-10HP	PV6xII/3HP
150		PSM 40-250/110	YE3-160MI-2-IIkw	192-10HP	PV6«11/3HP
200		PSM 40-250/150	YE3-160M2-2-15kw	380-27HP	PV6xII/3HP
2S0		PSM 50-250/185	YE3-160L-2-18.5kw	380-27HP	PV8xI2/4HP
300		PSM 50-250/220	YE3180M-2-22kw	38S-32HP	PV8«12/4HP
350		PSM 50-250/220	YE3180M-2-22kw	385-32HP	PV8xI2/4HP
400		PSM 65-250/300	YE3-200LI-2-30kw	480-38HP	PV 12x12/5.5HP
SOO	8	PSM 65-250/370	YE3-200L2-2-37kw	490N-58HP	PV 12x12/5.SHP
750		PSM 8O-2S0/550	YE3-25OM-2-55kw	490Z-7SHP	PV 12xI7/7.SHP
1000		PSM 100-250/750	YE3-280S-2-75kw	4102Z-99HP	PV 30x7/1 OHP
1250		PSM 125-250A100	YE3-315S-2-110kw	6102Q-130HP	PV 3Ox7A0HP
SOO	10	PSM 65-315/450	YE3-22SM-2-45kw	490-61HP	PV 12xI7/7.5HP
750		PSM 80-315/750	YE3-280S-2-75kw	4102Z-99HP	PV 30x7/10HP
1000		PSM 100-315/900	YE3-280M-2-90kw	4108Z-113HP	PV 3O«9/12HP
1250		PSM 125-315/1320	YE3-315M2132kw	6102ZS-170HP	PV30xII/15HP
500	13	PSM 65-315/750	Y£3-280S-2-75kw	4102Z-99HP	PV 30x9/12HP
750		PSM 80-315/900	YE3-280M-2-90kw	4108Z-113HP	PV 30x9/12HP
1000		PSM 100-315/1100	YE3-315$-2-110kw	6102Q130HP	PV30xII/ISHP
1250		PSM 125-315/1600	YE3-315LI-2-160kw	6102ZS-170HP	PV30xII/15HP
1500		PSM 125-315/1600	YE3-315LI-2-160kw	6102ZS-170HP	PV30xII/15HP

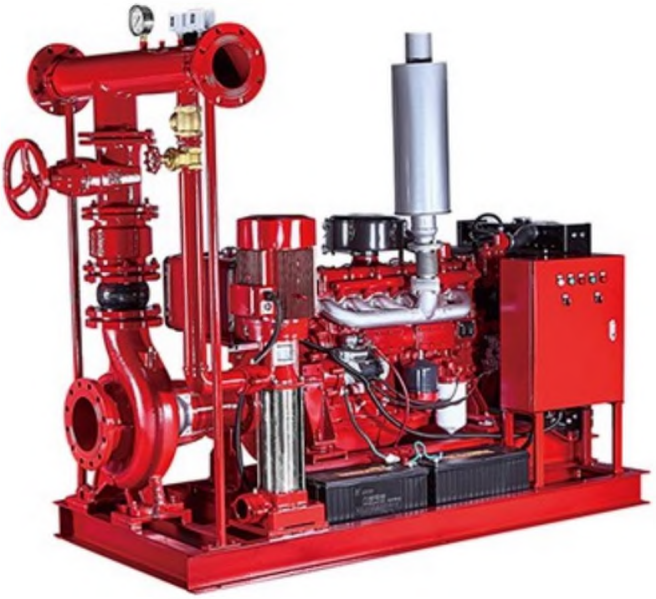

Fire Pump System PSDC

[PDJ]Fire Fighting Diesel Engine Pump Diesel Fire Pump Set From PURITY

TECHNICAL DESCRIPTION

■New EN733 standard centrifugal pump

■Original design by PURITY (patented)

■More Environmentally Friendly

■Low Fuel Consumption

■Strong Power

■Easy To Assemble

Product Description

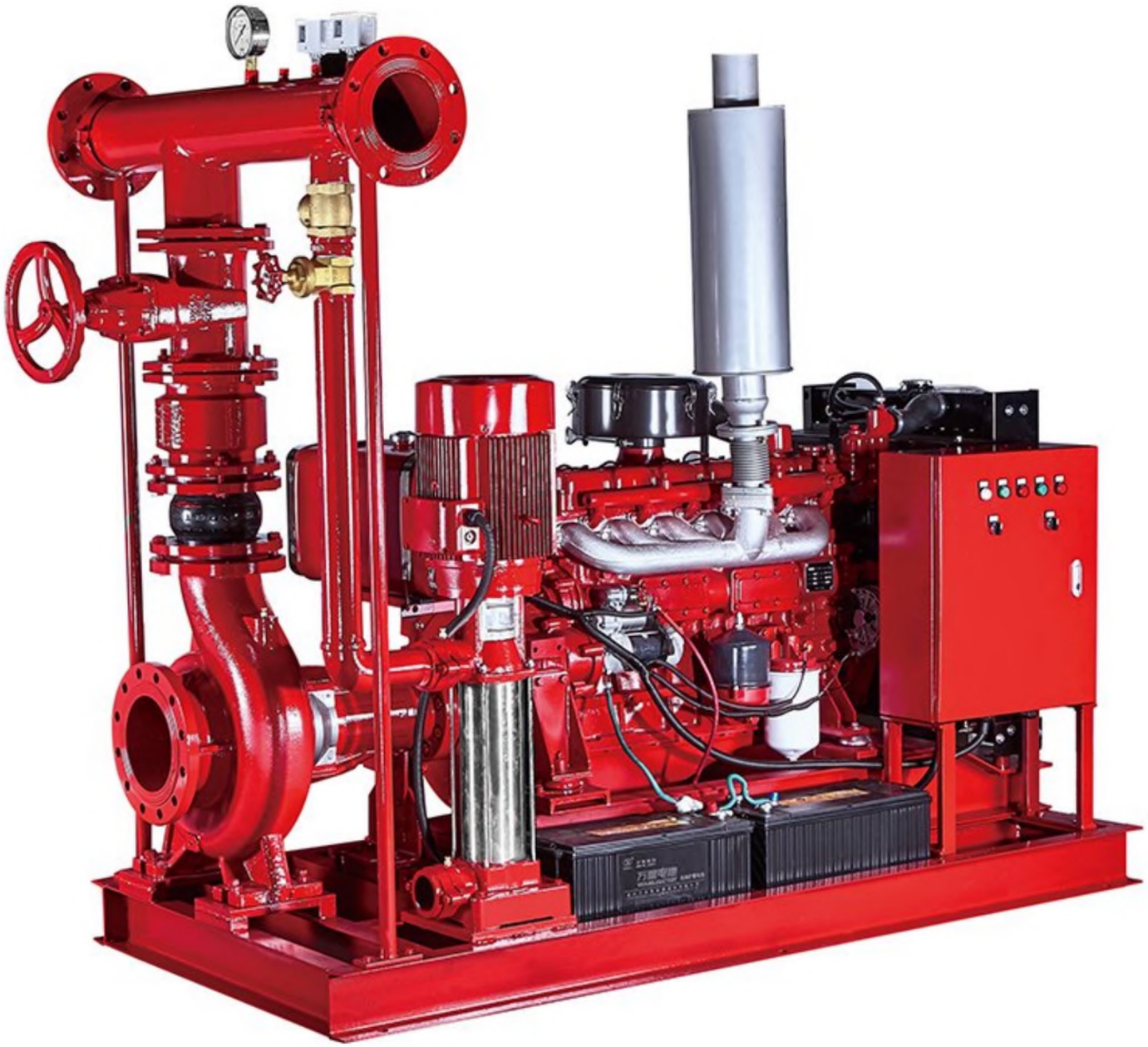

PV
TECHNICAL DESCRIPTION

TECHNICAL DESCRIPTION

New vertical multistage centrifugal pump
Original design by PURITY
Suction and discharge port in cast iron G20 thread
Quality NSK bearing, wear resistance mechanical seal

APPLICATIONS

Suitable for use with clean water and liquids that are not chemically aggressive towards the materials from which the pump is made.
The high efficiency and adaptability of these pumps to even the most unusual of applications, makes them ideal for use in the domestic, civil and industrial sectors; in particular for the distribution of water in combination with pressure sets and for pressure boosting.

USING LIMITS

Liquid temperature between -10°C and +120°C
Ambient temperature up to +50°C
Max. working pressure 25 bar
Continuous service SI

MATERIAL DESCRIPTION

MATERIAL DESCRIPTION / ***DESCRIPCI6N DE MATERIAL***

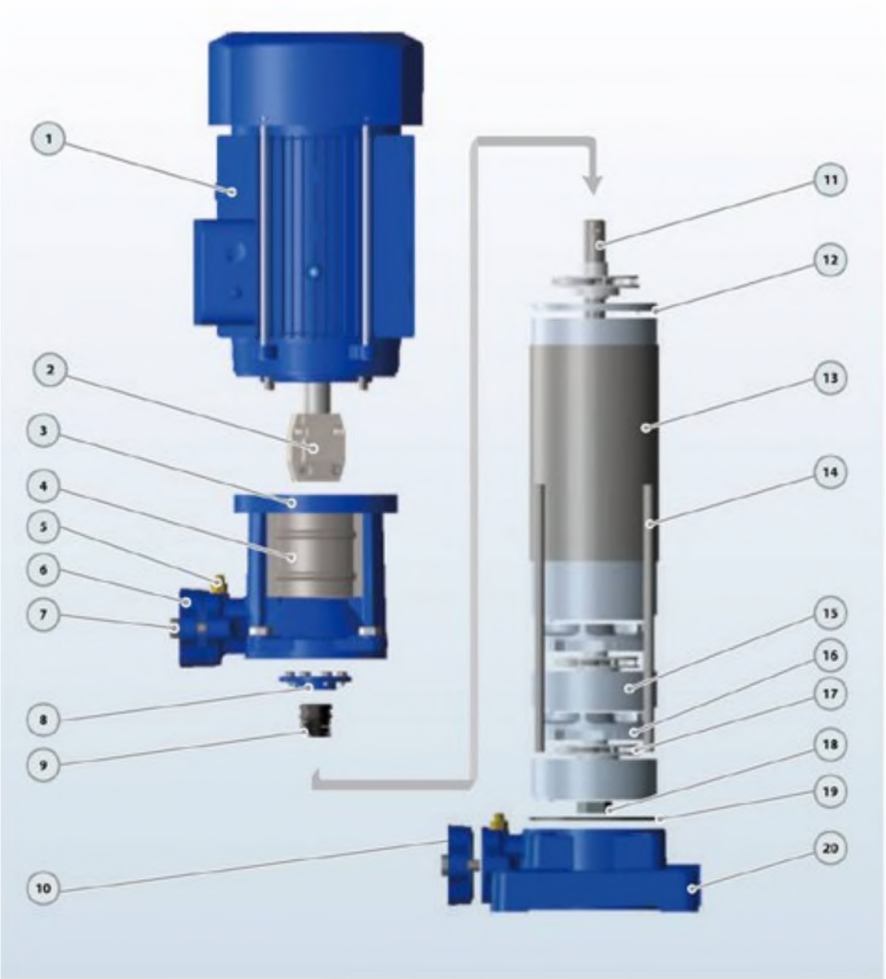

No.	Description *Descripcion*	Material *Material*
1	Motor *Motor*	IP55 Class F *IP5S Close F*
2	Coupfng Un/On	Iron *Hierro*
3	Discharge Body *Cuerpo tmpuisibn*	Cast iron *Fundicion*
4	Cover *Taps*	SS304 *mox3O4*
5	Release Vahre *Tap6n Ceb&do*	Brass *Bronco*
6	Discharge *Impuisfdn*	Cast iron *Fundteion*
7	Bolt *P&rno*	Steel *Ac^ro*
8	Seal Cover *Tapa Ciemo*	Cast iron *FundM^n*
9	Mechanical Soai *Cierre MecAnicc*	SiGCarbon/SS304 SrC-Gra«to-/nojr3(M
10	Suction *Aspiracidn*	Cast iron *Fundici^n*
11	Pump Shaft 狄	SS304/45# ken *Inox 304/45# hierm*
12	Diffuser Top Cover *Tope 7d/>a Difusor*	Tecnncpolmer *Tecnopolimero*
13	Punp Ccver *Tapa Bemba*	SS304 *Inox 304*
14	Through Boll *Porno*	Steel *Aceio*
15	O fluser Cover *Taps Difusof*	Technopoimef wth SS3O4 mg *locnopobrKm con Inox antlo*
16	Dffuser *Difusor*	T0Chnopoimefw<hSS3O4rtr) g *TecnopotinierQ con Inox onifo*
17	Impe4er *Impulsor*	Techncpolmer *TecnopoHmero*
18	Impel er Nut *Tuerca de fmpuisor*	Galvanizated Sleel *Acoro Gclvanizado*
19	*O-finQ* *Junta TMca*	Rubber *Caucho*
20	Sucbon Body *Cuerpo Aspiración*	Cast iron *Fundtcidn*

DIMENSION AND WEIGHT

PERFORMANCE CURVE / ***CURVAS DEFUNCIONAMIENTO***

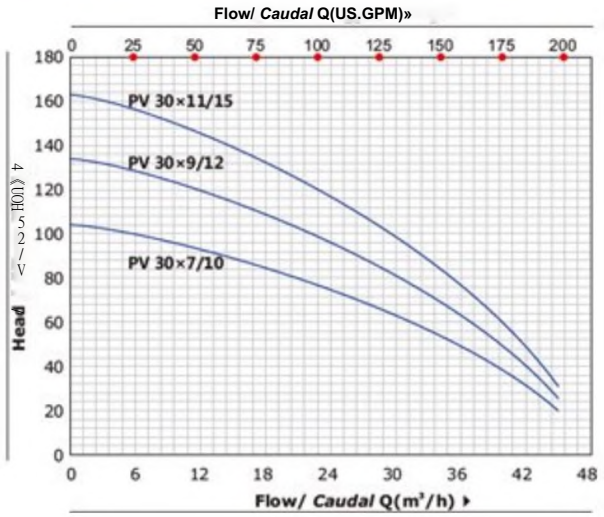

DIMENSIONS AND WEIGHT / ***DIMENSIONS Y PESOS***

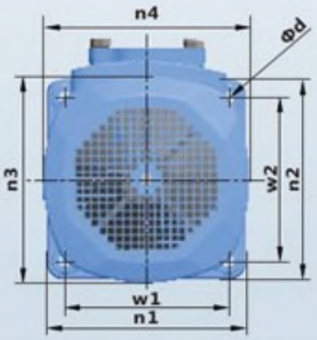

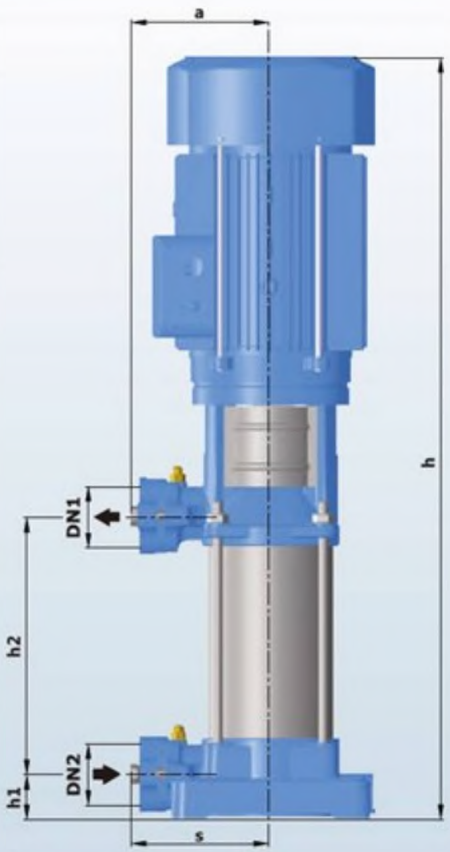

MODEL *MODELO*	DIMENSIONS / *DIMENSIONES* mm															kg	
	DN1	DN2	N	a	s	h	hi	h2	wl	w2	n1	n2	n3	n4	d	1-	3-
PV4x7/1.5	25/32	25/32	7	141	141	720	45.5	261.5	165	165	202	202	175	175	12	28.0	27.0
PV 4x9/2	25/32	25/32	9	141	141	790	45.5	331.5	16S	165	202	202	175	175	12	33.0	32.0
PV 4x13/3	25/32	25/32	13	141	141	930	45.5	471.5	165	165	202	202	175	175	12	38.0	37.0
PV 4x16/4	25/32	25/32	16	141	141	1082	45.5	576.5	16S	165	202	202	195	19S	12	48.0	47.0
PV6x5/1.5	25/32	25/32	S	141	141	650	45.5	191.5	165	165	202	202	175	175	12	26.0	2S.0
PV 6x8/2	25/32	25/32	8	141	141	755	45.5	296.5	16S	165	202	202	175	175	12	31.0	30.0
PV 6x11/3	25/32	25/32	11	141	141	860	45.5	401.5	165	165	202	202	175	175	12	36.0	35.0
PV 6x15/4	25/32	25/32	IS	141	141	1047	45.5	S41.5	16S	165	202	202	195	195	12	46.0	4S.0
PV8x4/1.5	40/50	40/50	4	141	141	615	45.5	156.5	165	165	202	202	175	175	12	26.0	25.0
PV 8x7/2	40/50	40/50	7	141	141	720	4S· S	261.5	16S	16S	202	202	175	175	12	31.0	30.0
PV 8x9/3	40/50	40/50	9	141	141	790	45.5	331.S	16S	16S	202	202	175	175	12	36.0	3S.0
PV 8x12/4	40/50	40/50	12	141	141	942	45.5	436.5	16S	16S	202	202	195	195	12	46.0	4S.0
PV 8x16/5.5	40/50	40/50	16	141	141	1082	45.5	576.5	165	165	202	202	195	195	12	-	50.0
PV 12x3/L5	40/50	40/50	3	141	141	580	45.5	121.5	165	16S	202	202	175	175	12	25.0	24.0
PV 12x5/2	40/50	40/50	5	141	141	650	45.5	191.5	165	16S	202	202	175	175	12	30.0	29.0
PV 12x7/3	40/50	40/50	7	141	141	720	45.5	261.5	165	16S	202	202	175	175	12	35.0	34.0
PV 12x9/4	40/50	40/50	9	141	141	837	45.5	331.5	165	165	202	202	195	195	12	45.0	44.0
PV 12x12/5.5	40/50	40/50	12	141	141	942	45.5	4J6.5	165	16S	202	202	195	195	12	-	50.0
PV 12x17/7.5	40/50	40/50	17	141	141	1167	45.5	611.5	16S	165	202	202	204	204	12	-	60.0
PV 30x7/10	50/65	50/65	7	170	170	1046	62	416	187	187	230	230	260	260	12	-	86.0
PV 30x9/12	50/65	50/65	9	170	170	1153	62	523	187	187	230	230	260	260	12	-	92.0
PV 30xII/IS	50/65	50/65	11	170	170	1260	62	630	187	187	230	230	260	260	12	-	100

PD

TECHNICAL DESCRIPTION

More Environmentally Friendly
Meeting China III Emission Standard
Low Fuel Consumption
Strong Power
Easy To Assemble

APPLICATIONS

Suitable for use with clean water and liquids that are not chemically aggressive towards the materials from which the pump is made.
The diesel engine pumps are recommended for use in water supply, cleaning sets, pressure boosting, firefighting sets, irrigation, industrial applications, water circulation in climatisation sets, agricultural.

USING LIMITS

Liquid temperature between -10°C and +120°C

Ambient temperature up to +50°C
Max. working pressure 16 bar
Continuous service SI

TECHNICAL DATA

TECHNICAL DATA / ***DATOS TtCNICOS***

Model	**178**	**186**	**188**	**192**	**380**	**385**	**480**	**485**	**490N**	**490**	**495**
Type	Si ngle-cylindef；4-stroke.air-cooled				Direct Injection, Water-cooling, Four Stroke						
Intake Type	Naturally Aspirated										
Bore*Stroke(mm*mm)	78*62	86*72	88*75	92*75	80*90	85*90	80*90	85*100	90*100	90*105	95*105
Cylinder No.	1	1	1	1	3	3	4	4	4	4	4
Displacement (L)	0.296	0.418	0.456	0.499	1.357	1.532	1.8	2.27	2.54	2.67	2.977
Rated Power/ Speed (kW/r/min)	3.7/3000 4.0/3600	5.7/3000 6.3/3600	6.6/3000 7.2/3600	7.5/3000 8.2/3600	20/3000	24/3000	28/3000	36/3000	42/3000	45/3000	50/3000
Horse Power	5.0/3000 5.5/3600	7.8/3000 8.6/3600	9.0/3000 10.0/3600	10.2/30C0 12.0/3600	27	32	38	49	58	61	68
Power Coverage(kW)	≤11	≤11	名11	或n	£37	名37	£37	彡55	^55	S55	名75

Model	**498**	**4102**	**4105**	**4108**	**485Z**	**490NZ**	**490Z**	**498Z**	**4102Z**	**4105Z**	**4108Z**
Type	Direct Injection. Water-cooling, Four Stroke										
Intake Type	Naturally Aspirated				7urtx>-charging						
Bore*Stroke(mm*mm)	98*105	102*118	105*118	108*118	85*100	90*100	90*105	98*105	102*118	105*118	108U18
Cylinder No.	4	4	4	4	4	4	4	4	4	4	4
Displacement (L)	3.168	3.857	4.087	4.324	2.27	2.54	2.67	3.168	3.857	4.087	4.324
Rated Power/ Speed (kW/r/min)	54/3000	62/3000	67/3000	73/3000	44/3000	50/3000	55/3000	60/3000	73/3000	75/3000	83/3000
Horse Power	73	85	91	99	60	68	75	81	99	102	113
Power Coverage(kW)	^75	£100	^100	£100	^55	iS5	^55	^75	^100	^100	^100

Product Description

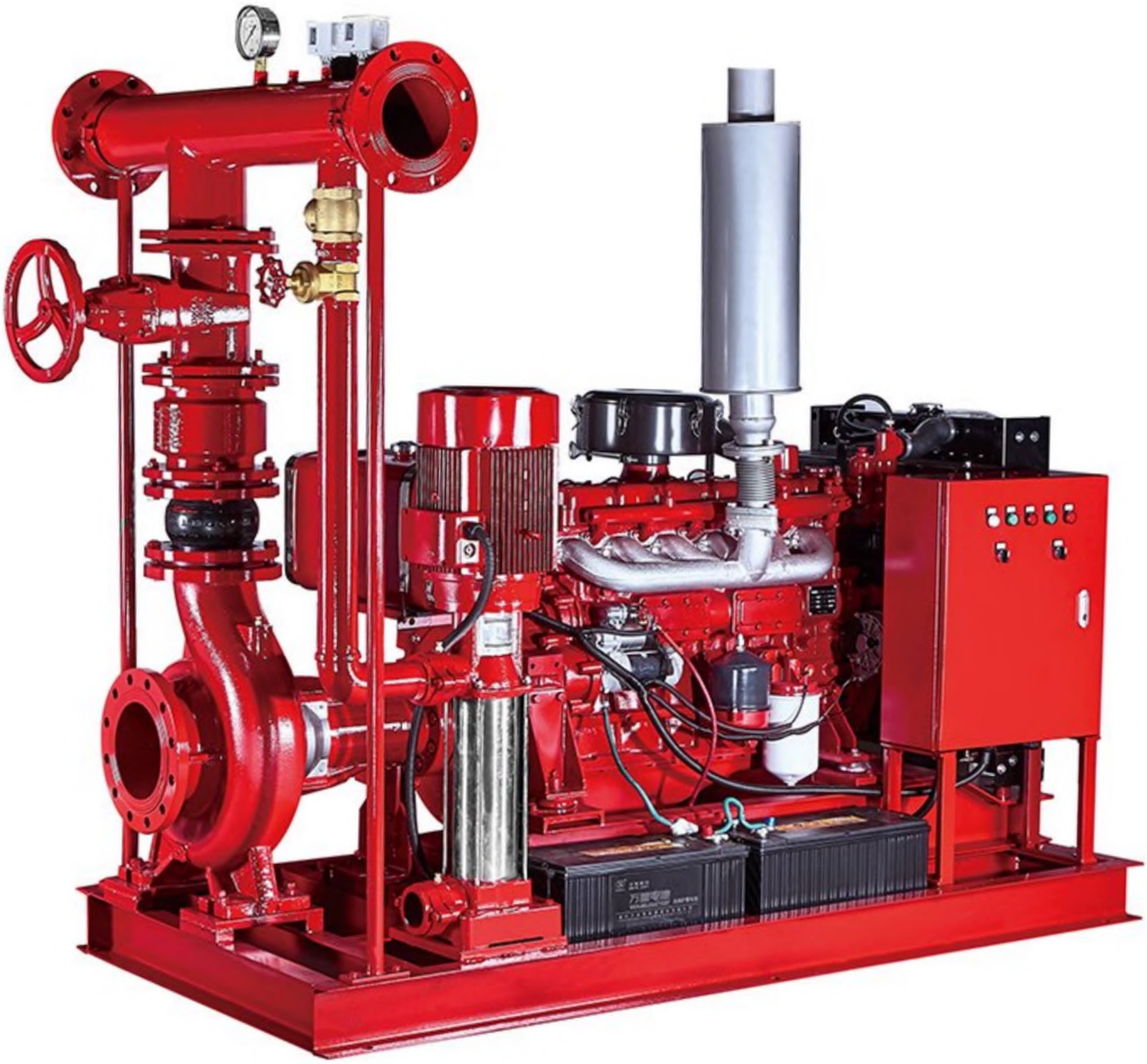

PV

TECHNICAL DESCRIPTION

TECHNICAL DESCRIPTION

New vertical multistage centrifugal pump
Original design by PURITY
Suction and discharge port in cast iron G20 thread
Quality NSK bearing, wear resistance mechanical seal

APPLICATIONS

Suitable for use with clean water and liquids that are not chemically aggressive towards the materials from which the pump is made.
The high efficiency and adaptability of these pumps to even the most unusual of applications, makes them ideal for use in the domestic, civil and industrial sectors; in particular for the distribution of water in combination with pressure sets and for pressure boosting.

USING LIMITS

Liquid temperature between -10°C and +120°C
Ambient temperature up to +50°C
Max. working pressure 25 bar

Continuous service SI

MATERIAL DESCRIPTION

MATERIAL DESCRIPTION / ***DESCRIPCI6N DE MATERIAL***

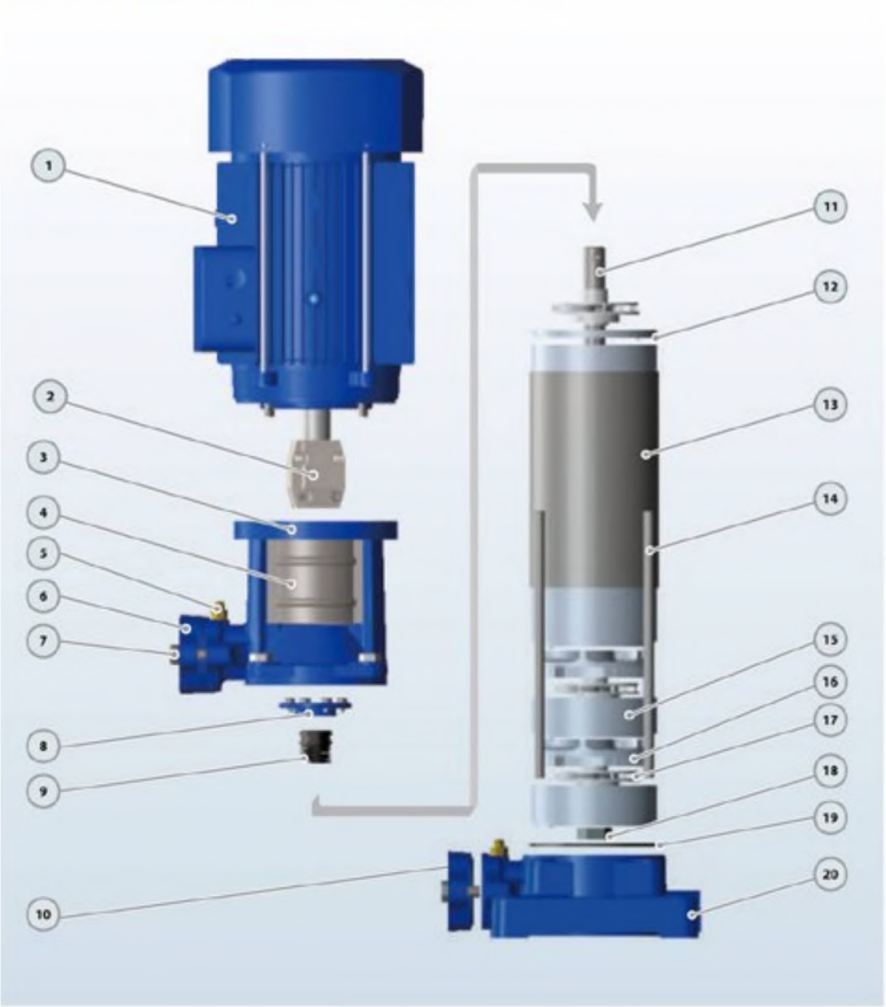

No.	Description *Descripcion*	Material *Material*
1	Motor *Motor*	IP55 Class F *IP5S Close F*
2	Coupfng Un/On	Iron *Hierro*
3	Discharge Body *Cuerpo tmpuisibfi*	Cast iron *Fundicion*
4	Cover *Tapa*	SS304 *ox 304*
S	Release Vahre *Tap6n C&b&do*	Brass *Bronco*
b	Discharge *Impuisidn*	Cast iron *Fundtcion*
7	Bolt *P&rno*	Sted *Ac^ro*
8	Seal Cover Tapa Qerre	Cast iron *FundM^n*
9	Mechanical Soai *Cierre Mec^nico*	SiGCarbon/SS304 *SiC~Grafik>-Inox304*
10	Suction *Aspiracidn*	Cast iron *Fundici6r*
11	Pump Shaft *Eje*	SS304/45# Iren *Inox 304/45H hierro*
12	Diffuser Top Cover *Tope Tops Difusor*	Tecnncpolmer *Tecnopdimero*
13	Punp Ccver *Tapa Bemba*	SS304 *Inox 304*
14	Through Bolt *Porno*	Steel *Aceio*
15	Dffuser Cover *Tapa Dtfusof*	Technopofanefwth SS3O4 mg *iGcmpobnsm con Inox anHo*
16	Dffuser *Difusor*	T0Chnopoimefw<hSS3O4rtr) g *Tecnopoltmero con Inox onifo*
17	impeler *Impulsor*	Techncpolmer *TecnopoHmero*
18	Impel er Nut *Tuefca de fmputsor*	Galvanizated Sleel *Aeon Gclvanizodo*
19	O-nn (j *Junta TMca*	Rubber *Caucho*
20	Sucbon Body *Cuerpo Asptnd&i*	Cast iron *Fundtcidn*

DIMENSION AND WEIGHT

PERFORMANCE CURVE / ***CURVAS DEFUNCIONAMIENTO***

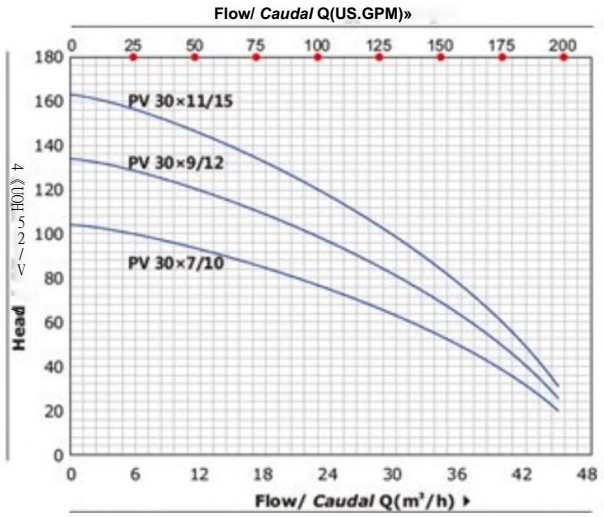

DIMENSIONS AND WEIGHT / ***DIMENSIONS Y PESOS***

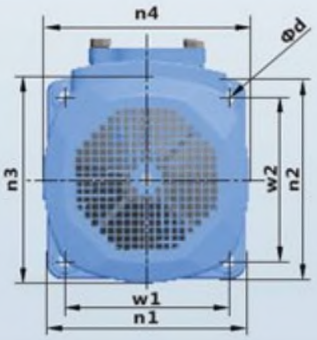

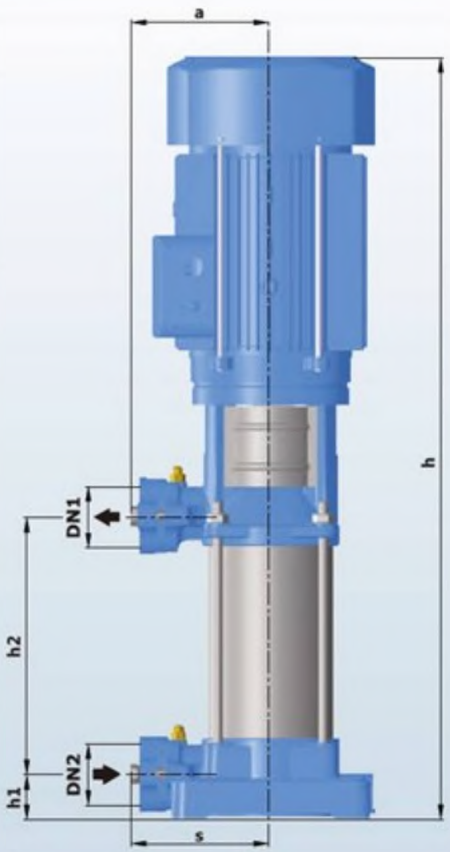

MODEL *MODELO*	DIMENSIONS / *DIMENSIONES* mm															kg	
	DN1	DN2	N	a	s	h	hi	h2	wl	w2	n1	n2	n3	n4	d	1-	3-
PV4x7/1.5	25/32	25/32	7	141	141	720	45.5	261.5	165	165	202	202	175	175	12	28.0	27.0
PV 4x9/2	25/32	25/32	9	141	141	790	45.5	331.5	16S	165	202	202	175	175	12	33.0	32.0
PV 4x13/3	25/32	25/32	13	141	141	930	45.5	471.5	165	165	202	202	175	175	12	38.0	37.0
PV 4x16/4	25/32	25/32	16	141	141	1082	45.5	576.5	16S	165	202	202	195	19S	12	48.0	47.0
PV6x5/1.5	25/32	25/32	S	141	141	650	45.5	191.5	165	165	202	202	175	175	12	26.0	2S.0
PV 6x8/2	25/32	25/32	8	141	141	755	45.5	296.5	16S	165	202	202	175	175	12	31.0	30.0
PV 6x11/3	25/32	25/32	11	141	141	860	45.5	401.5	165	165	202	202	175	175	12	36.0	35.0
PV 6x15/4	25/32	25/32	IS	141	141	1047	45.5	S41.5	16S	165	202	202	195	195	12	46.0	4S.0
PV8x4/1.5	40/50	40/50	4	141	141	615	45.5	156.5	165	165	202	202	175	175	12	26.0	25.0
PV 8x7/2	40/50	40/50	7	141	141	720	4S· S	261.5	16S	16S	202	202	175	175	12	31.0	30.0
PV 8x9/3	40/50	40/50	9	141	141	790	45.5	331.S	16S	16S	202	202	175	175	12	36.0	3S.0
PV 8x12/4	40/50	40/50	12	141	141	942	45.5	436.5	16S	16S	202	202	195	195	12	46.0	4S.0
PV 8x16/5.5	40/50	40/50	16	141	141	1082	45.5	576.5	165	165	202	202	195	195	12	-	50.0
PV 12x3/L5	40/50	40/50	3	141	141	580	45.5	121.5	165	16S	202	202	175	175	12	25.0	24.0
PV 12x5/2	40/50	40/50	5	141	141	650	45.5	191.5	165	16S	202	202	175	175	12	30.0	29.0
PV 12x7/3	40/50	40/50	7	141	141	720	45.5	261.5	165	16S	202	202	175	175	12	35.0	34.0
PV 12x9/4	40/50	40/50	9	141	141	837	45.5	331.5	165	165	202	202	195	195	12	45.0	44.0
PV 12x12/5.5	40/50	40/50	12	141	141	942	45.5	4J6.5	165	16S	202	202	195	195	12	-	50.0
PV 12x17/7.5	40/50	40/50	17	141	141	1167	45.5	611.5	16S	165	202	202	204	204	12	-	60.0
PV 30x7/10	50/65	50/65	7	170	170	1046	62	416	187	187	230	230	260	260	12	-	86.0
PV 30x9/12	50/65	50/65	9	170	170	1153	62	523	187	187	230	230	260	260	12	-	92.0
PV 30xII/IS	50/65	50/65	11	170	170	1260	62	630	187	187	230	230	260	260	12	-	100

PD

TECHNICAL DESCRIPTION

More Environmentally Friendly
Meeting China III Emission Standard
Low Fuel Consumption
Strong Power
Easy To Assemble

APPLICATIONS

Suitable for use with clean water and liquids that are not chemically aggressive towards the materials from which the pump is made.
The diesel engine pumps are recommended for use in water supply, cleaning sets, pressure boosting, firefighting sets, irrigation, industrial applications, water circulation in climatisation sets, agricultural.

USING LIMITS

Liquid temperature between -10°C and +120°C

Ambient temperature up to +50°C
Max. working pressure 16 bar
Continuous service SI

TECHNICAL DATA

TECHNICAL DATA / ***DATOS TtCNICOS***

Model	**178**	**186**	**188**	**192**	**380**	**385**	**480**	**485**	**490N**	**490**	**495**
Type	Si ngle-cylindef；4-stroke.air-cooled				Direct Injection, Water-cooling, Four Stroke						
Intake Type	Naturally Aspirated										
Bore*Stroke(mm*mm)	78*62	86*72	88*75	92*75	80*90	85*90	80*90	85*100	90*100	90*105	95*105
Cylinder No.	1	1	1	1	3	3	4	4	4	4	4
Displacement (L)	0.296	0.418	0.456	0.499	1.357	1.532	1.8	2.27	2.54	2.67	2.977
Rated Power/ Speed (kW/r/min)	3.7/3000 4.0/3600	5.7/3000 6.3/3600	6.6/3000 7.2/3600	7.5/3000 8.2/3600	20/3000	24/3000	28/3000	36/3000	42/3000	45/3000	50/3000
Horse Power	5.0/3000 5.5/3600	7.8/3000 8.6/3600	9.0/3000 10.0/3600	10.2/30C0 12.0/3600	27	32	38	49	58	61	68
Power Coverage(kW)	≤11	≤11	名11	或n	£37	名37	£37	彡55	^55	S55	名75

Model	**498**	**4102**	**4105**	**4108**	**485Z**	**490NZ**	**490Z**	**498Z**	**4102Z**	**4105Z**	**4108Z**
Type	Direct Injection. Water-cooling, Four Stroke										
Intake Type	Naturally Aspirated				7urtx>-charging						
Bore*Stroke(mm*mm)	98*105	102*118	105*118	108*118	85*100	90*100	90*105	98*105	102*118	105*118	108U18
Cylinder No.	4	4	4	4	4	4	4	4	4	4	4
Displacement (L)	3.168	3.857	4.087	4.324	2.27	2.54	2.67	3.168	3.857	4.087	4.324
Rated Power/ Speed (kW/r/min)	54/3000	62/3000	67/3000	73/3000	44/3000	50/3000	55/3000	60/3000	73/3000	75/3000	83/3000
Horse Power	73	85	91	99	60	68	75	81	99	102	113
Power Coverage(kW)	^75	£100	^100	£100	^55	iS5	^55	^75	^100	^100	^100

Fire Pump System PEEJ

PEEJ Horizontal Centrifugal Water Pump Multistage Centrifugal Pump for Fire Fighting System Assembly

TECHNICAL DESCRIPTION

-More Environmentally Friendly

-Meeting China III Emission Standard

-Low Fuel Consumption

-Strong Power

-Easy To Assemble

Product Specification (50HZ)

Product Description

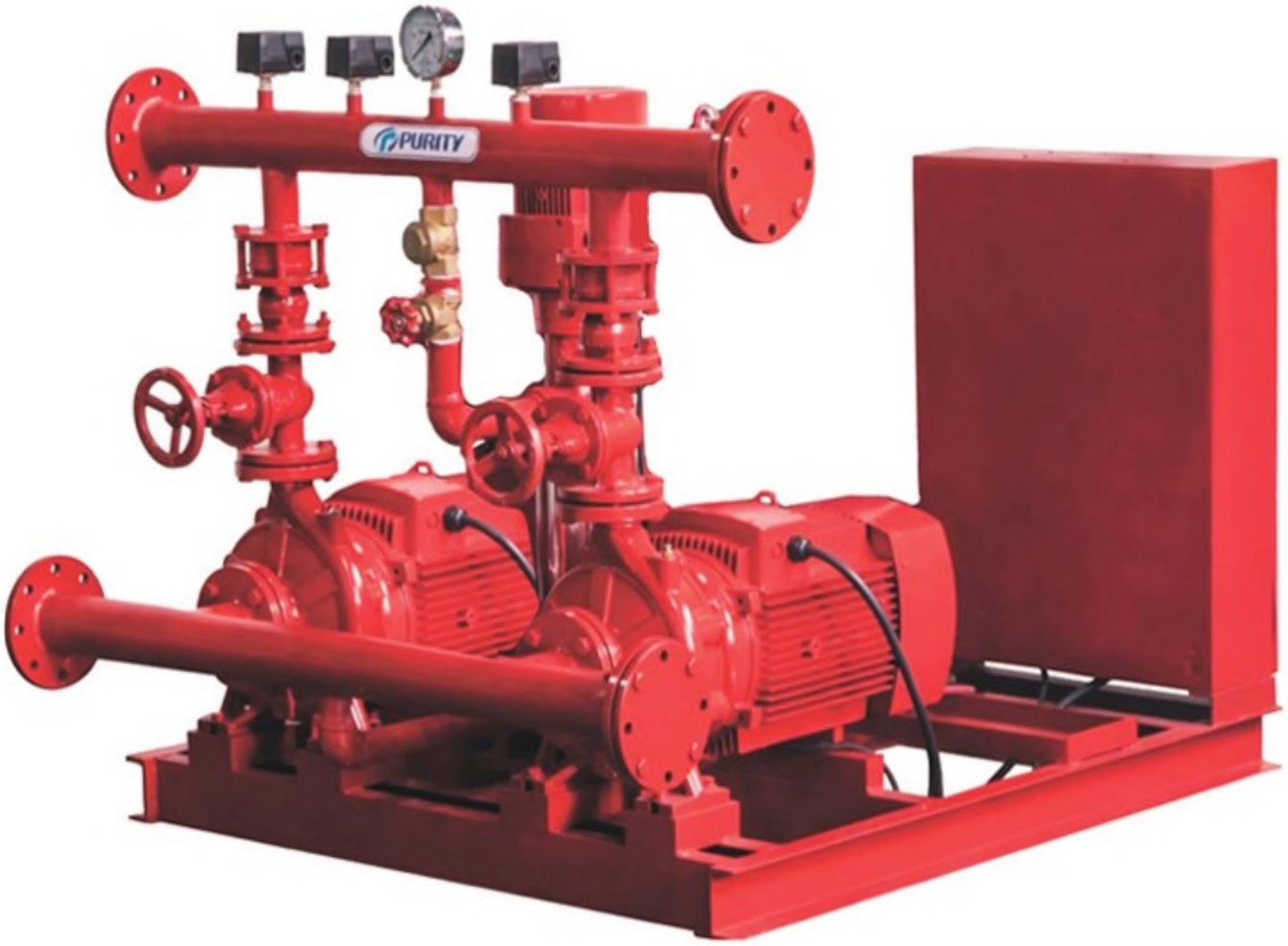

PV

TECHNICAL DESCRIPTION

New vertical multistage centrifugal pump
Original design by PURITY
Both square motor & round motor available
YE3 high efficient motor, with protection IP55 class F
Pump case with anti-corrosive coating
Impeller in techno-polimer
Shaft in stainless steel AISI 304 or galvanized iron
Suction and discharge port in cast iron G20 thread
Quality NSK bearing, wear resistance mechanical seal

APPLICATIONS

Suitable for use with clean water and liquids that are not chemically aggressive towards the materials from which the pump is made. The high efficiency and adaptability of these pumps to even the most unusual of applications,

makes them ideal for use in the domestic, civil and industrial sectors; in particular for the distribution of water in combination with pressure sets and for pressure boosting.

USING LIMITS

Liquid temperature between -10°C and +120°C
Ambient temperature up to +50°C
Max. working pressure 25 bar
Continuous service S1

PST

TECHNICAL DESCRIPTION

New EN733 standard centrifugal pump
Original design by PURITY (patented)
Both square motor & round motor available
YE3 high efficient motor, with protection IP55 class F
Pump case with anti-corrosive coating
Impeller in stainless steel AISI 304 or cast iron
Shaft in stainless steel AISI 304 or galvanized iron
Galvanized counter flange with bolts, nuts and gaskets
Quality NSK bearing, wear resistance mechanical seal

APPLICATIONS

Suitable for use with clean water and liquids that are not chemically aggressive towards the materials from which the pump is made.
The EN733 centrifugal pumps are recommended for use in water supply,

cleaning sets, pressure boosting, firefighting sets, irrigation, industrial applications, water circulation in climatisation sets, agricultural.

USING LIMITS

Liquid temperature between -10°C and +120°C
Ambient temperature up to +50°C
Max. working pressure 16 bar
Continuous service S1

PATENTS

Registered model PST
Registered Patent Design n° 201530478502.0

TECHICAL DATA/DATOS TECNICOS 50HZ n=2900 1/min

MODEL *MODELO*	Power *Potencia* kw	hp	US gpm l/min m³/h	Q=DEUVERY/ *CAUDAL* 0	26	40	66	79	106	119	1S9	185	211	238	317	370	396	476	529	608	793	925	DN mm
				0	100	150	250	300	400	450	600	700	800	900	1200	1400	1500	1800	2000	2300	^000	3500	
				0	6	9	15	18	24	27	36	42	48	54	72	84	90	108	120	158	180	210	
32*125/07	0.75	1		17.5	16.7	15	12	9															50x32
32-125/11	1.1	1.5		22	21	19.7	16.5	14.5	9														50x32
32-160/15	15	2		25.4	23.7	22.5	18.5	15.8															50x32
32-160/22	2.2	3		31	29.6	28.5	24.5	22	15														50x32
32-160/50	3			35	34.3	34	28	25.5	19	15													50x32
32-200/30	3	4		44.2	43	39.8	35.2	32.2	24.6	19.8													50x32
32-200/40	4	5.5		54.5	52	50	45.5	41.9	35	30.3													50x32
32-250/55	5.5	7.5		60	59.5	59	55	51	34.5														50x32
52-250/75	7.5	10		69.5	69	68.5	66	63	53														50x32
32-250/110	11	15		90	89.5	89	82	79	66														50x32
32-250/55D	5.5	7.5		79.5	74.7	71.8	63	56	37.5														50x32
32-250/75D	7.5	10		95	93	91	83	76	57.8														50x32
40-125/11	1.1	1.5		14.7				13.5	11.5	10.1	53												65x40
40-125/15	1.5	2		18.1				17	15	13.9	96	6											65x40
40-125/22	2.2	3		24.5				23.2	21.5	20.2	16	13	8.3										65x40
40-160/30	3	4		31.8				29.5	27.5	26.3	21.5	17.5											65x40
40-160/40	4	5.5		38				36	34	33	28.5	25	20.1										65x40
40-200/55	5.5	7.5		46				43.8	41.3	40.1	35	30											65x40
40-200/75	7.5	10		57				53.6	51.5	50	45	41	36.5										65x40
40-250/92	9.2	12.5		64				59	56.5	55	49.5	45	39.8										65x40
40-250/110	11	15		72				67.5	66	63.5	57.5	52.2	47										65x40
40-250/150	15	20		84.5				80	77.3	75.2	71	65	61										65x40
SO-125/22	22	3		17							15.4	14	12.8	11.5	6.5								65x50

50-125/S0	3	4		20							1&8	18	17	15.6	11								65x50
50-125/40	4	5.5		24							23.1	23	21.5	20.3	15.8	11.8							65x50
50-160/55	5.5	7.5	Head	32							30.6	30	28	26.6	20.5	14.8							65x50
50-160/75	7.5	10	H(m)	40							38	37	36	344	29	24	21						65x50
50-200/92	9.2	12.5		50.5							46.8	45	43	40.9	32.5	26.7							65x50
50-200/HO	11	15		57.5							53.5	52	50	47.5	40	34	29						65x50
50-200/150	15	20		62							58	56.5	54.5	52	44.5	39	35.5						65x50
50-250/150	15	20		68.5							64	63	61.5	59	50	41							65x50
50-250/185	18.5	25		79							75.8	74.8	74	71.5	63.5	55.5	47						65x50
50-250/220	22	30		89.5							86	85.3	84	81.5	73.5	65.5	57						65x50
65125/40	4	5.5		19									17.3	16.8	14.5	13	11.8						80x65
65-125/55	5.5	7.5		23									21.3	20.9	19	17.5	16.7	13.7					80x65
65-125/75	7.5	10		27									26	25.6	24.5	23	22.5	20	18				80x65
65-160/92	9.2	12.5		33										31.5	30	28	27.1	24	21.5				80x65
65-160/110	11	15		36										34.5	33	31.5	30.8	28	25.5				80x65
65-160/150	15	20		42										41	40	38.5	373	35	33	29.5			80x65
65-200/150	15	20		45										45.5	43	41	40,2	36.5	34				80x65
65-200/185	18.5	25		52										52.3	51	49	48.2	44.5	42				80x65
65200/220	22	30		59										59.5	58	56	55	52	49.5	44.5			80x65
65-250/220	22	30		64.8										64.7	62	60	58.5	53	50				80x65
65-250/500	30	40		80										79.8	77.5	75.5	74.5	70	66	58			80x65
65-250/370	37	50		92										90.5	88.5	87	85	80.5	78	68			80x65
80-125/40	4	5.5		17									16.5	15.9	14.3	13.5	11.6	10	7.5				100x80
80-125/55	5.5	7.5		21									20.5	20	19	18	16.5	15	12.5	9.5			100x80
80-125/75	7.5	10		26									25	25	24.5	23.8	22.5	21.5	19.5	16.5			100x80

TECHICAL DATA/DATOS TECNICOS 50HZ n=2900 1/min

MODEL MODELO	Power POTCnCIS		US gpm	Q=DELIVERY/ CAUDAL																		DN
				0	264	396	529	634	793	881	925	969	1057	1233	1322	1586	1762	2203	2643	3524	4405	
			l/min	0	1000	1500	2000	2400	3000	3333	3500	3666	4000	4666	5000	6000	6666	8333	10000	13333	16666	
		hp	m³/h	0	60	90	120	144	180	200	210	220	240	280	300	360	400	500	600	800	1000	mm
80-160/110	n	15		27	27	27.3	24.5	21.1	16													100x80
80-160/150	15	20		32.8	32.6	32.5	30.2	27	22.1	18.5	16.7											100x80
80-160/185	18.5	25		39	38.5	38	36.7	33.6	28.8	25.3	23.5											100x80
80-160/220	22	ao		44	43.5	43	4L7	38.6	33.8	30.3	28.5											100x80
80-200/220	22	30		48	47.7	47.5	43.5	39.2	32.5	27.2	24.5											100x80
80-200/300	30	40		60	59.7	59.5	57	53.1	47	42.7	40.5											100x80
80-250/370	37	50		71.5	70.9	70.5	65.5	59.3	51	43.2	38.5											100x80
80-250/450	45	60		88	86.7	86	83.6	78.5	70.5	60	51											100x80
80-250/550	55	75		94.5	94.5	94.5	91.8	87	79.5	72.1	68.3											100x80
100-160/150	15	20	Head	35	33.5	32.5	30	27.8	24.5	21.5	20	18.3	15									125x100
100-160/185	18.5	25	H(m)	38.5	37.5	36.5	34.3	32.2	29	25.7	24	22	18									125x100
100-160/220	22	JO		43	41	40	37.6	35.2	-	28.5	27	25.3	22									125x100
100-200/220	22	30		38.5	拖7	35.7	33.8	31.7	28.5	26.8	26	25	22.9	16.3	13							125x100
100-200/300	30	40		44.5	42.5	42	40.2	38.8	36.7	34.2	33	31.7	29	2L7	18							125x100
100-200/370	37	50		55	53	51	50.6	49.2	47	45	44	42.8	40.5	32.8	29							125x100
100-250/450	45	60		65	65	64	63	61	58	56	55	53.3	50	39	33.5							125x100
100-250/550	55	75		77	76	75.5	75	73.8	72	71.7	71.5	70.7	69	62.3	59							125x100
100-250/750	75	100		91	91	90.5	89.7	88	85.5	84	83.3	81.5	78	71.7	68.5	48						125x100

TECHNICAL DATA *IDATOS TiCNICOS* **50 Hz n=29001 /min**

MODEL *MODELO*	Power *Potencia*		us 卿	Q ^DELIVERY /C/K/D4L																				DN
				0	5	11	13	16	19	21	24	26	29	32	37	42	48	53	58	63	69	74	79	
			l/min	0	20	40	50	60	70	80	90	100	110	120	140	160	180	200	220	240	260	280	300	
	kw	hp	rr^h	0	12	2.4	3	3.6	4.2	4.8	5.4	6	6.6	7.2	8.4	9.6	10.8	12	13.2	14.4	15.6	16.8	18	mm
PV 4x7/1.5	1.1	1.5		60.7	56.8	52.1	49	4S.9	42.8	38.9	3S	30.3	2S.7	202										25x25
PV 4x9/2	1.5	2		78	73	67	63	59	55	50	45	39	33	26										25x25
PV 4x13/3	2.2	3		113	105	96.8	91	85.2	79.4	72.2	65	56.3	47.7	37.5										25x25
PV 4x16/4	3	4		139	130	119	112	105	97.8	88.9	80	69.3	58.7	46.2										25x25
PV6x 5/1.5	1.1	1.5		44.4				135.5	333	30.9	28.4	26.1	23.4	20.2	14.3	6.8								32x32
PV6xft/2	IS	2		71.1				56.7	53.2	49.5	45.5	41.8	37.5	32.4	22.9	10.9								32x32
PV6xU/3	2.2	3		97.7				78	73.2	68	62.5	57.5	51.5	44.5	31.5	15								32x32
PV 6x15/4	3	4		133				106	99.8	92.7	85.2	78.4	70.2	60.7	43	20.S								32x32
PV8x4/1.5	1.1	1.5		36.8						30	28.4	27.2	26	24.4	21.2	17.6	132	9.2	4.8					40x40
PV 8x7/2	1.5	2	H(m)	64.4						52.5	49.7	47.6	45.5	42.7	37.1	30.8	23.1	16.1	8.4					40x40
PV 8x9/3	2.2	3		82.8						67.5	63.9	61.2	S8.5	54.9	47.7	39.6	29.7	20.7	10.8					40x40
PV 8x12/4	3	4		110						90	85.2	81.6	78	73.2	63.6	52.8	39J6	27.6	14.4					40x40
PV 8x16/5.5	4	5.5		147						120	114	109	104	97.6	84.8	70.4	S23	36.8	19.2					40x40
PV 12x3/1.5	1.1	1.5		31								25.4	24.7	24	22.4	20.6	18.4	16.2	133	10.9	83	5.1	2	50x50
PV 12x5/2	1.5	2		51.7								42.4	41.2	40	37.3	34.3	30.7	27	22.2	18.2	13.8	85	3.3	50x50
PV 12x7/3	2.2	3		72.3								593	57.6	56	523	48.1	43	37.8	31	25.5	19.4	11.9	4.7	50x50
PV 12x9/4	3	4		93								76.2	74.1	72	67.2	61.8	552	48.6	39.9	32.8	24.9	15.4	6	50x50
PV 12x12/5.5	4	5.5		122								102	98.8	96	89.6	82.4	73J6	64.8	512	43.8	33.2	20.5	8	50x50
PV 12x17/75	5.5	7.5		176								144	140	136	127	117	104	91.8	75.4	62	47	29	11.3	50x50

MODEL *MODELO*	Power *Potencia*		us 卯m	Q=DELIVERY /C4yDA£									DN
				0	26	S3	79	ioe	132	159	185	211	
			l/min	0	100	200	300	400	500	600	700	800	
	kw	hp	m³/h	0	6	12	18	24	30	36	42	48	mm
PV 30x7/10	7.5	10		104	100	93	83	74	64	49	31	4	50x50
PV 30x9/12	9.2	12.5	H(m)	133	128	119	108	96	82	63	40	5	65x65
PV 30x11/15	11	IS		163	156	145	132	116	99	77	48	6	

MATERIAL DESCRIPTION /DESCRIPCI6N DE MATERIAL

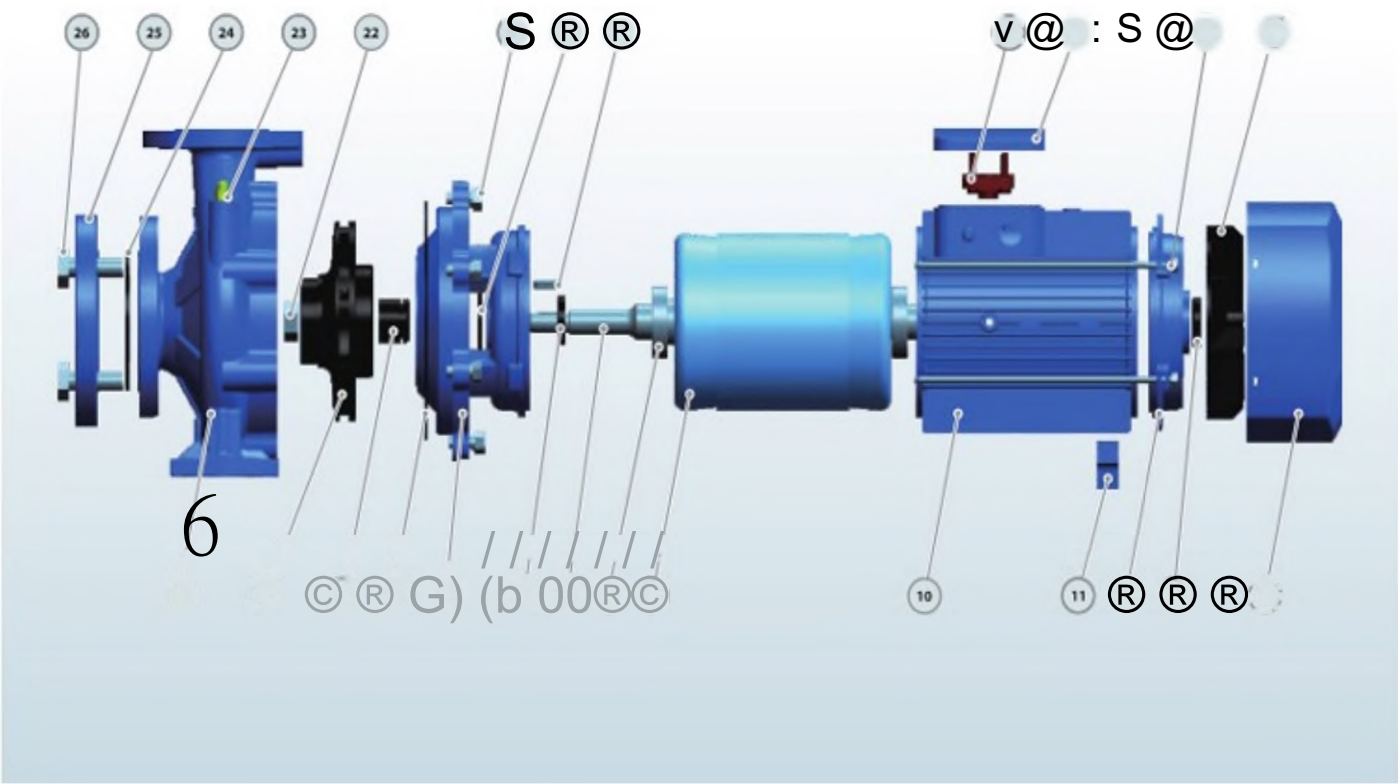

No.	Description	Material	No.	Description	Material	No.	Description	Material
1	Pump Case	Cast iron	10	Motor Case	Aluminum	19	Impeller Key	Iron
2	Impeller	SS304/Cast iron	11	Support Foot	Plastic	20	Water Deflector	Rubber
3	Mechanical Seal	SiC/Carbon/SS304	12	Back Cover	Cast iron	21	Connection Bolt	Steel
4	O-ring	Rubber	13	Reinforced Seal	Rubber	22	Impeller Nut	Galvanizated Steel
5	Connection	Cast iron	14	Fan Cover	Aluminum	23	Release Valve	Brass
6	Reinforced Seal	Rubber	15	Fan	Plastic	24	Gasket	Rubber
7	Shaft	SS304/45# Steel	16	Through Bolt	Steel	25	Counter Flange	Galvanizated Cast iron
8	Bearing	Ball Bearing	17	Terminal Box	Aluminum	26	Flange Bolt	Steel
9	Wound Stator/Rotor	Silicon Steel/Copper	18	Terminal Board	Plastic			

DIMENSIONS AND WEIGHT / *DIMENSIONES Y PESOS*

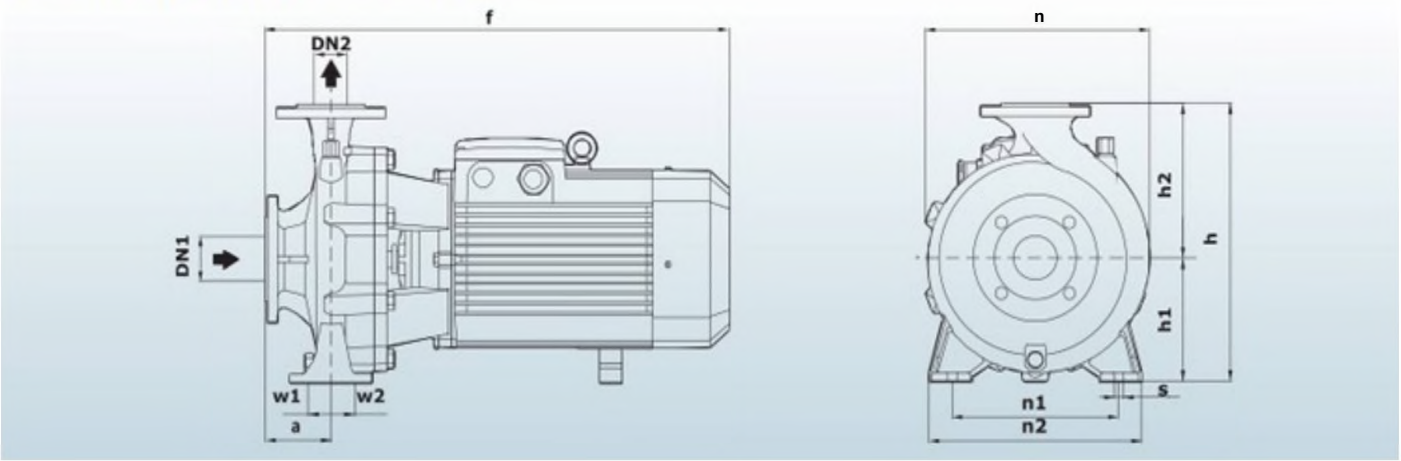

MODEL/MODELO		DIMENSIONS / *DIMENSIONES* mm													kg	
Single-phase *Monofdsico*	Three-phase *Tftfysico*	DN1	DN2	a		f	h	hi	h2	n	nl		n2	w1	w2	s	1~	3~
32-125/7	32-125/7																27	24
32-125/11	32-125/11			80		435	2S5	114	141	202	140		190				28	25
32-160/15	32-160/15																5	S
32-160/22	32-160/22			83			295	133	162	245			245	3S	35	15		
32-160/30	32160/30					470					190						54	50
32-200/30	32-200/30	50	32	82		490	342	161	181	26S			240				S6	S2
-	32-200/40																	S3
-	32-250/55																-	66
-	32-250/75			88		S90	405	186	219	333	250		328	49	49	16	-	73
-	32-250/110																-	
-	32-250/550																-	95
-	32-250/75D			160		610	362	162	200	330	216		280			14	-	73
40-125/11	40-125/11																30	80
40-125/15	40-125/15			82		440	260	116	144	220	160		212				33	
40-125/22	40-125/22													37	37		M	34 27
40-160/30	40-160/30			80		490	305	13S	170	250	190		241				52	4S 29
-	40*160/40		40														.	50
-	40-200/55			102		S60	34S	162	193	282	214		267				-	66
-	40-200/75																.	73
-	40-250/92			94		712	41S	186	*229*	327	250		327	49	49		-	100
-	40-250/110																.116	
-	40-250/150	6S															■	146
50-125/22	50-125/22																45	41
50-125/30	50-125/30			102		52$	305	135	170	263	190		245				54	S0
-	50125/40																•	52
-	50-160/55			110		560	348	164	193	270	*212*		262	37	37		-	64
-	50-160/75		50													15	垂	71
-	50-200/92			104		722	392	186	206	307	*232*		310				-	90
-	50-200/110																L •	106
-	50-250/150																-	145
-	50-250/185			102		720	416	186	230	330	250		327				-	153
-	50-250/220																-	183
-	65 125/40																•	56
-	65-125/55			104		580	34S	162	193	275	212		280				-	68
-	65-125/75																•	74
-	65-160/92																-	90
-	65 160/110	80	65	110		730			239								-	106
-	6S160/1S0						425	186			232		*309*	49	49		-	134
-	65-200/150																• —	140
-	6S-200/18S			111		740			240								-	145
-	65-200/220																•	18S
-	80-125/40									330							-	56
-	80-125/55			117			357	163	194		212		280				! -	68
-	80-125/75	ion	80			750											-	74
-	80-160/110																-	113
-	80-160/1S0			88							2S5		332				-	143
-	80-160/185-220						435	186	250								:-	150
-	100-160/150																-	143
-	100-160/185	12S	100	130		765				34S	*262*		340	55	55	16	-	150
-	100-160/220																-	133

DIMENSIONS AND WEIGHT / *DIMENSIONES Y PESOS*

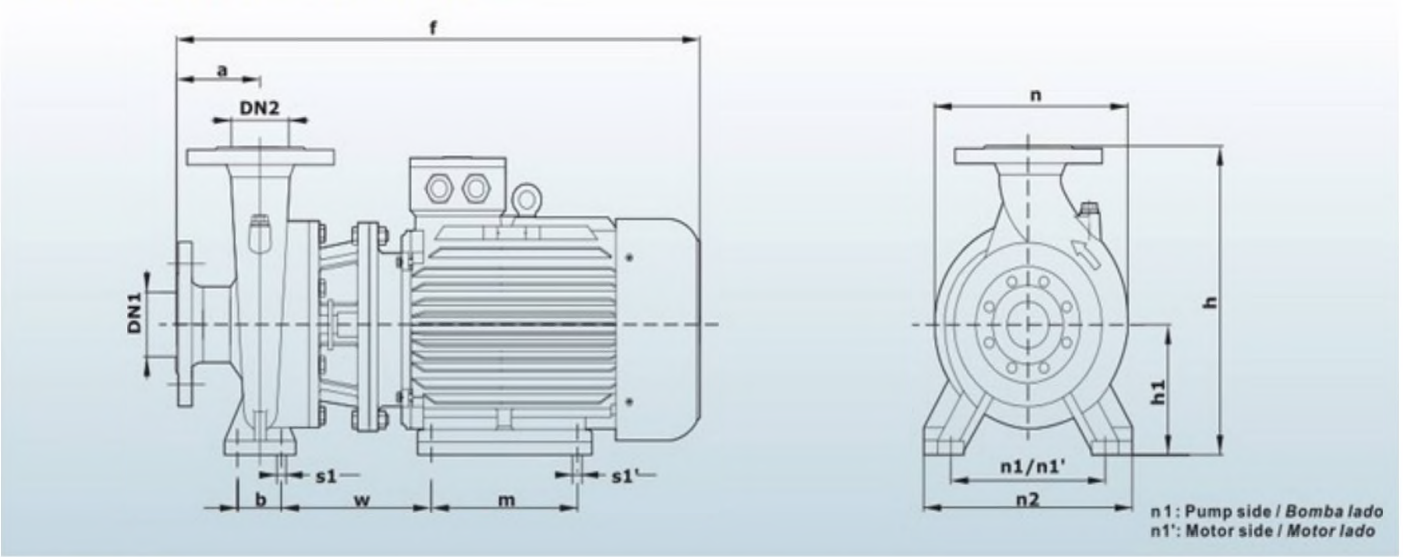

MODEL/MODELO Three-phase *TrifAsico*	DIMENSIONS / *DIMENSIONES* mm															kg
	DN1	DN2	a	f	h	hi	n	n1	nt	n2	b	w	m	s1	s1*	3~
65-250/220	80	65	116	870	420	180	369	260	279	320	70	246	241	18	15	210
65-250/300				990	456	195		250	318	327		293	30S		19	230
65-250/370																240
80-200/220	100	80	118	880	460	250	360	310	279	260	95	258		20		212
80-200/300				950					318			246	241		15	222
80.250/370			130		537		490			310		228	305		19	245
80-250/450				980					356			229	311			385
80-250/550				1160					406			363	349		24	497
100-200/220	125	100	140	910	530	225	422	324	279	402	115	256	305	18	15	217
100-200/300				102S					318			248	241			227
100-200/370																250
100-250/450				1000	580	250	418	310	356	402	95	224	311	20	19	390
100-250/550				1180					406			32S	349		20	503
100250/750				1250		280			436							535

COUNTER FLANGE / *CONTRABRIDA*

DN	D	K	HOLES *ORIfiOOS*	
	mm	mm	N	(Pmm
32	140	100		
40	150	110		
SO	165	125		
6S	185	145		18
80	200	160		
100	220	180		
12S	250	210	8	
150	285	240		22
200	340	295		
250	40S	35S	12	26

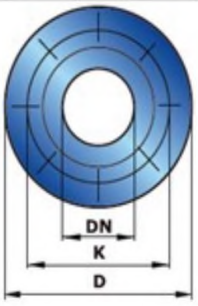

PIPE RECOMMEND /H/SfR/A *RECOMENDADA*

SERIES *SERIE*	SUCTION *ASPIRAObN*	DISCHARGE *IMPULSIdN*	PIPE RECOMMEND *TUBERIA RECOMENDADA* SUCTION *ASPIMOON*	DISCHARGE *IMPULMN*
32	50mm	32mm	27,"-3-	2*-27/
40	6Smm	40mm	3M-	27a.-3.
50	65mm	50mm	4 ,	3*
65	80mm	65mm	$•	4.
80	100mm	80mm	6-	5-
100	125mm	100mm	8"	6-
12S	150mm	125 mm	10.	8-
ISO	200mm	150mm	12-	W
200	250mm	200mm	14.	ir
2S0	300mm	250mm	16*	14'

PERFORMANCE CURVE / *CURVAS DEFUNCIONAMIENTO*

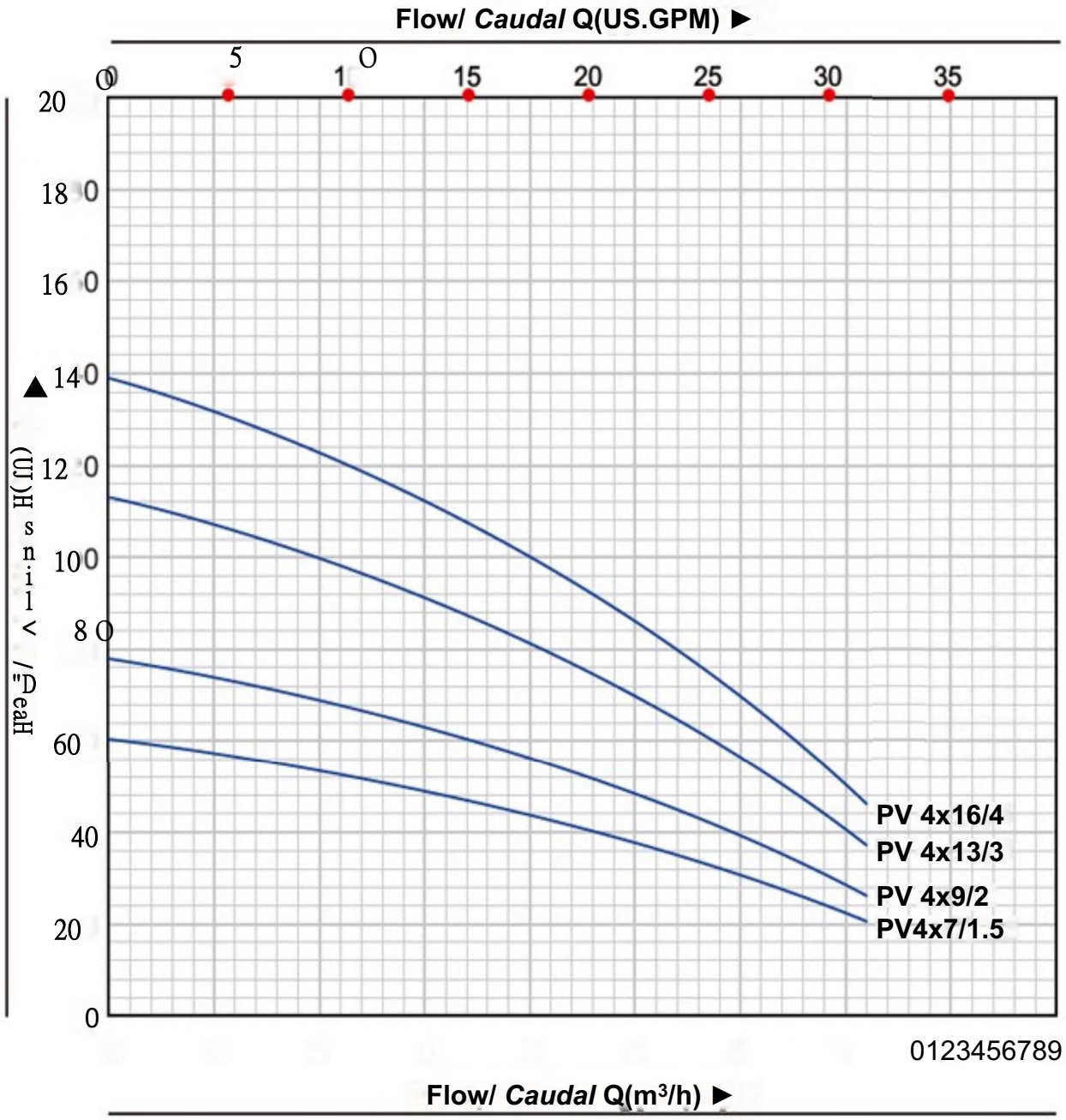

50 Hz n=29001/min

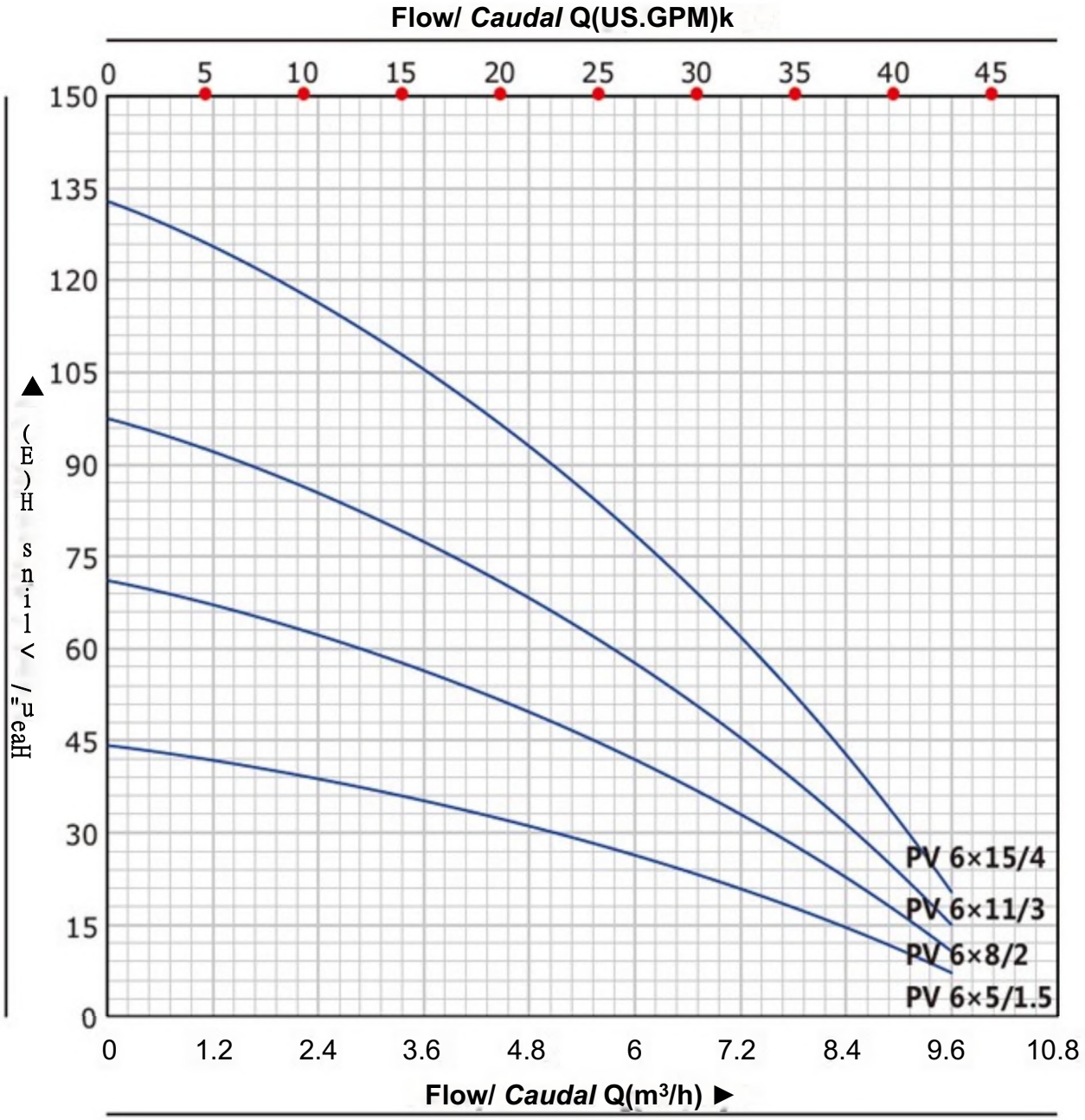

PERFORMANCE CURVE / *CURVAS DEFUNCIONAMIENTO*

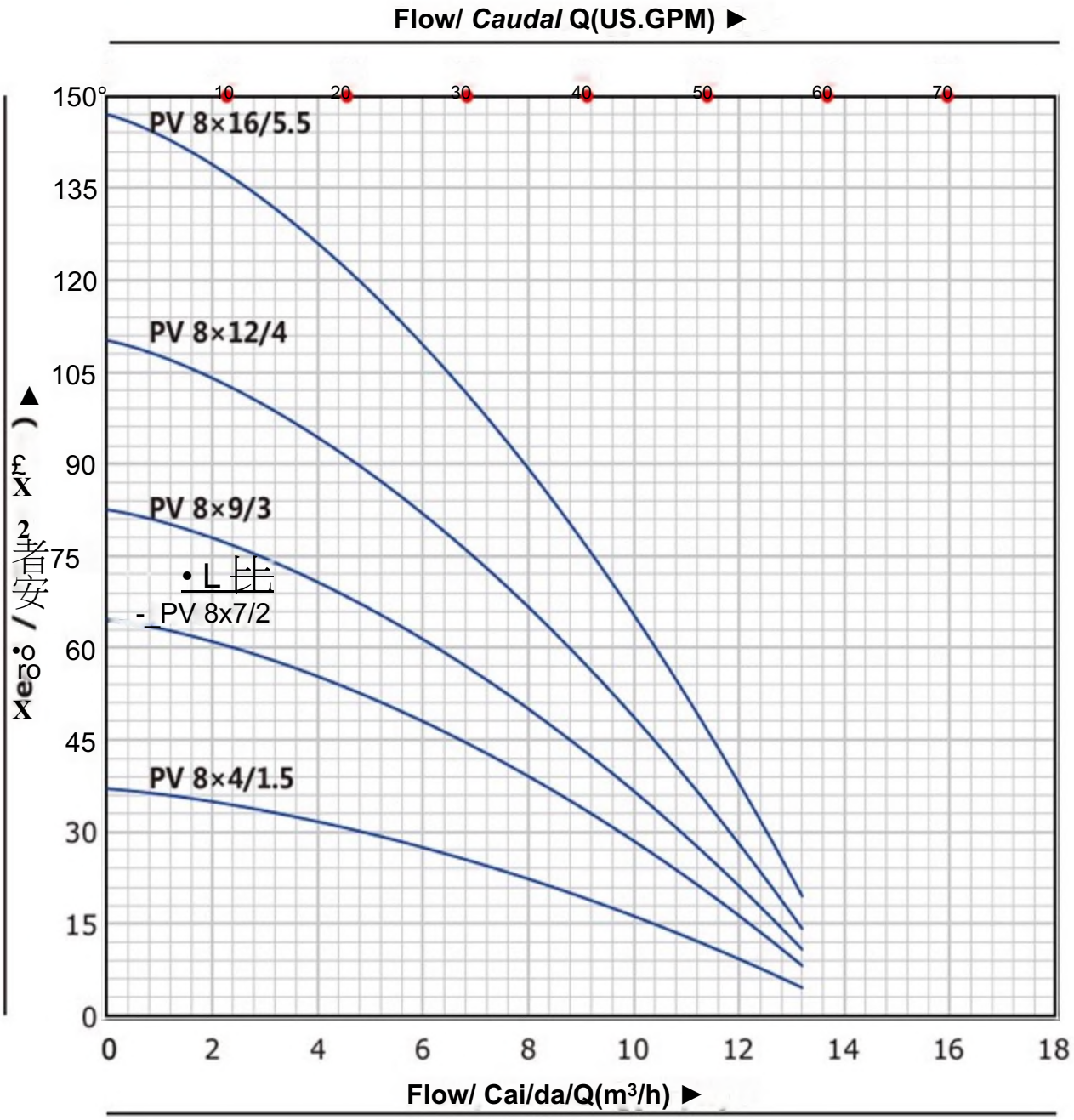

50 Hz n=29001/min

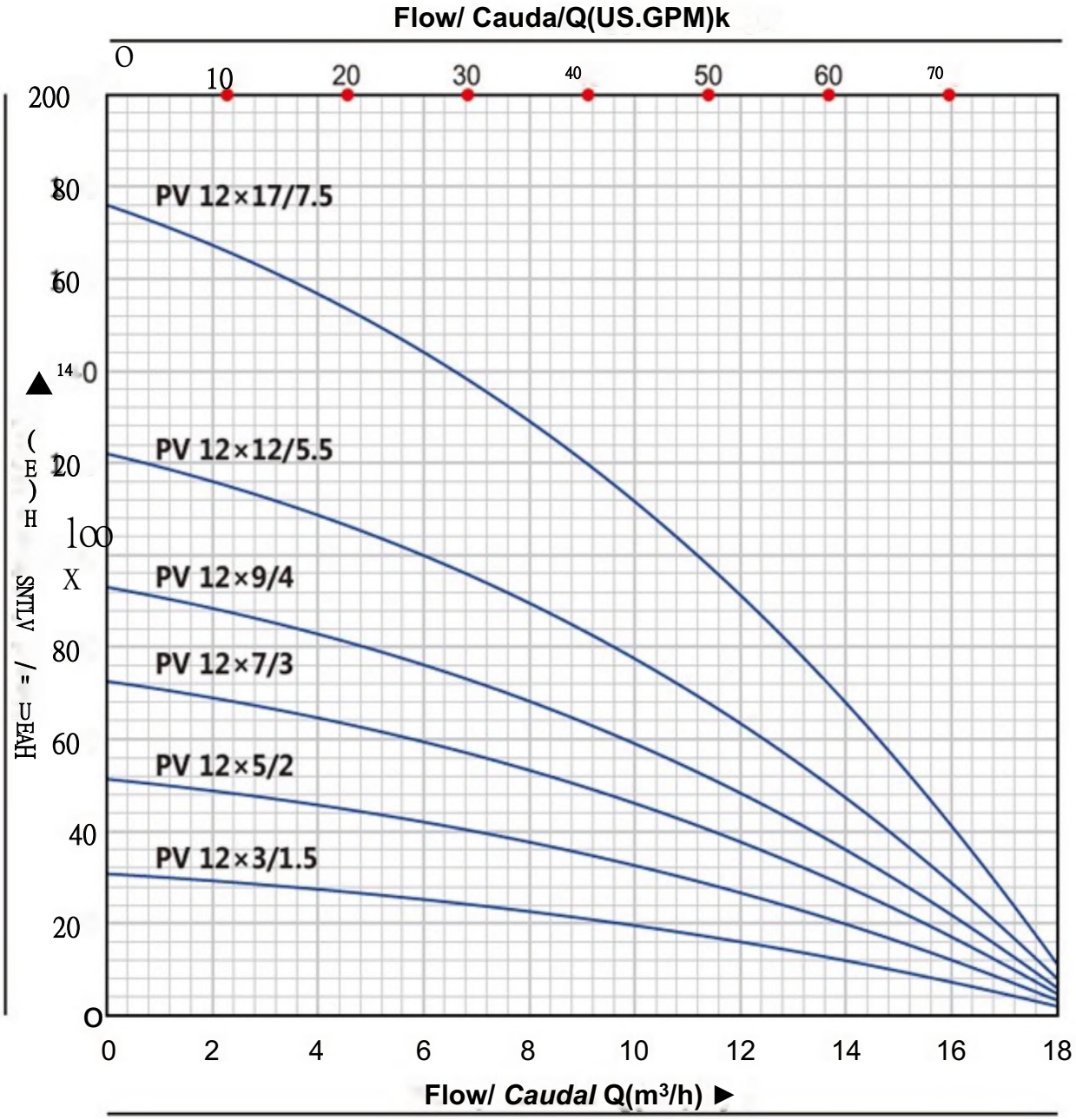

MATERIAL DESCRIPTION / *DESCRIPCIdN DE MATERIAL*

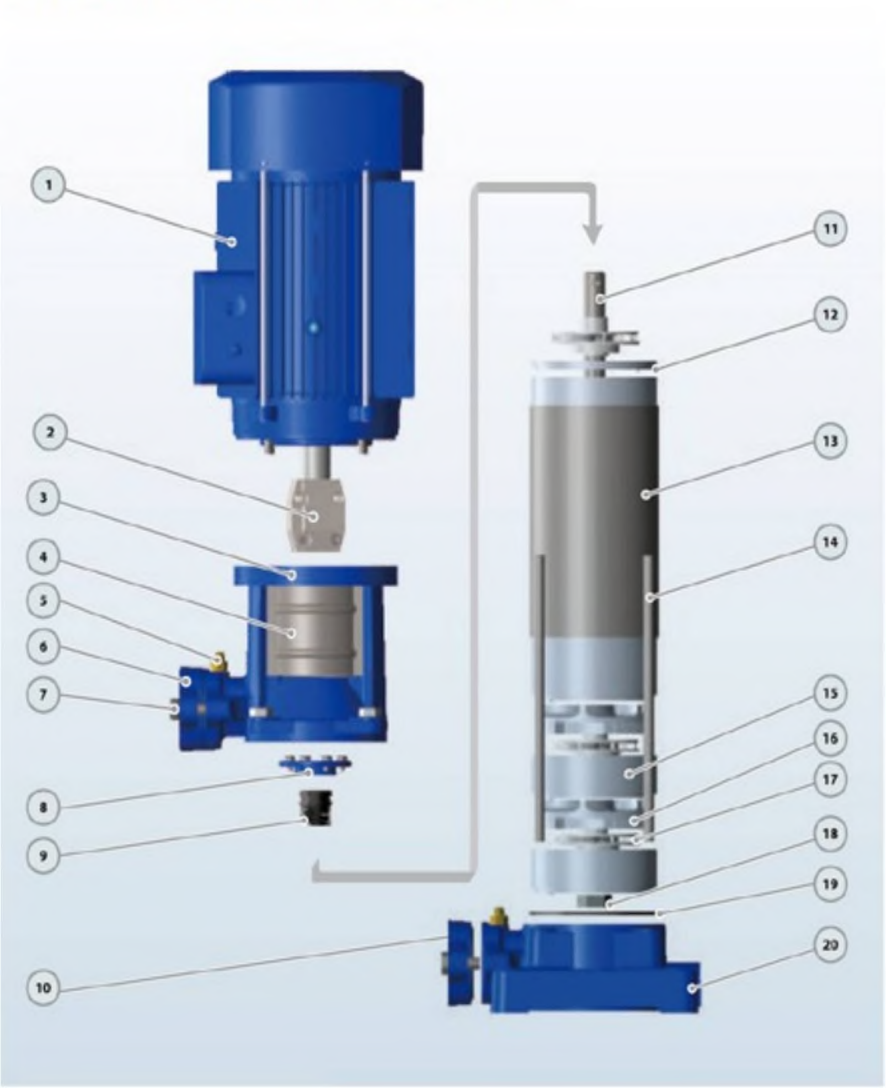

No.	Description *Descripdon*	Material *Material*
1	Motor *Motor*	IP55 Class F *IP55Cto&eF*
2	CoupSng *Unión*	Iron *Hierro*
3	Discharge Body *Cuerpo Impuisidn*	Cast iron *Fundicidn*
4	Cover *Tapa*	SS304 *咖(304*
S	Release VaVe *Tap6n Cebado*	Brass *Brcncc*
6	Discharge *Impuisidti*	Cast iron *Fundtcion*
7	Bot Porno	Steel *Ac^ro*
8	Seal Cover *Topa G ene*	Cast iron *Fundicibn*
9	Mechanical Sod *Cierre MecAnico*	SiC?Carbon/SS304 *SiC-Grsfik>-Inox304*
10	Suction *Aspiracidn*	Cast iron *Fundidoii*
11	Pump Shaft *E/e*	SS304/45# Iren *Inox* 304/45# *h^rro*
12	Diffuser Top Cover *Tope Taf>e Difu^or*	Tech nopoli mer *TecnopoHmero*
13	Punp Cover *Tapa Bemba*	SS304 *Inox 304*
14	Through Boll *Porno*	Steel *AOBIV*
15	Dffuser Cover *Tapa Dfusof*	TiBchnopofcn9rMhSS3O1mg *lecnopobrKm con Inox anHo*
16	Dffuser *Difusor*	Techropoifn9rv4fiSS3O4mg 7ecr) cpo/4niero con *Inox anifo*
17	Impe^er *Impulsor*	Techncpolimer *Tecnopctimero*
18	Impeler Nut *Tuerca de Impulsor*	Galvanizated Sleel *Acoro Gelvonizado*
19	0, *Junta TMca*	Rubber *Caucho*
20	Suction Body *Cuerpo Aspuwdn*	Cast iron *Fundkidn*

PERFORMANCE CURVE *ICURVAS DEFUNCIONAMIENTO*

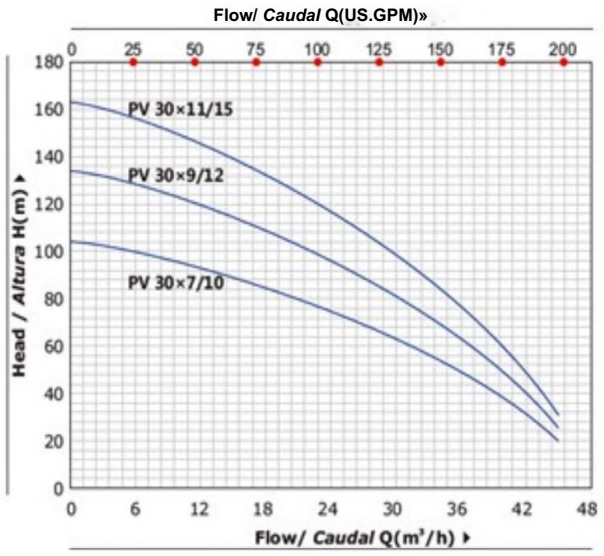

DIMENSIONS AND WEIGHT / *DIMENSIONESY PESOS*

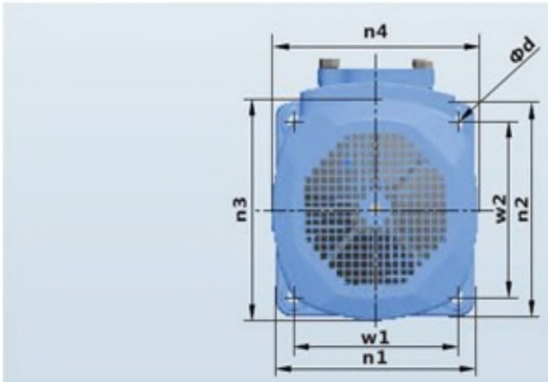

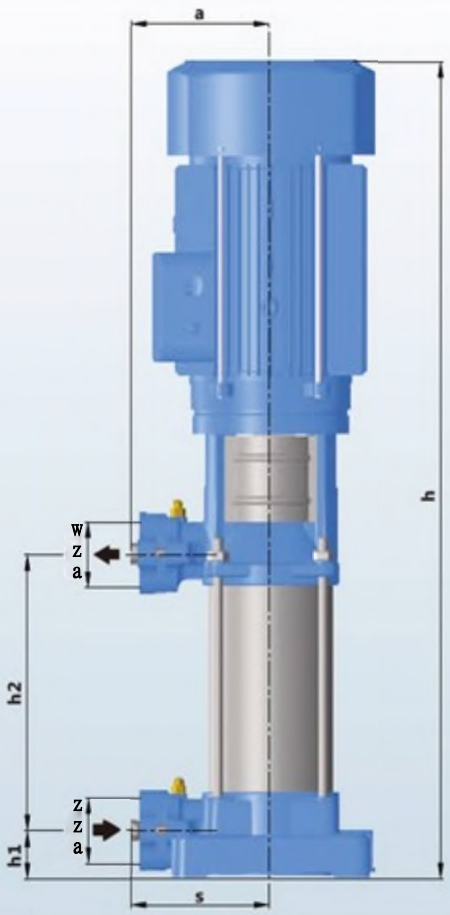

MODEL *MODELO*	DIMENSIONS *1 DiMENSIONES* mm															kg	
	DN1	DN2	N	a	9	h	hi	h2	wl	w2	n1	n2	n3	n4	d	1~	3-
PV4x7/l,5	25/32	25/32	7	141	141	720	45.5	261.5	165	16S	202	202	175	175	12	28.0	27.0
PV 4x9/2	25/32	25/32	9	141	141	790	45.5	331.5	165	16S	202	202	175	175	12	33.0	32.0
PV 4x13/3	25/32	25/32	13	141	141	930	45.5	471.5	16S	16S	202	202	175	17S	12	38.0	37.0
PV 4x16/4	25/32	25/32	16	141	141	1082	45.5	576.5	165	16S	202	202	195	195	12	48.0	47.0
PV6x5/1.5	25/32	25/32	s	141	141	650	45.5	191.5	16S	165	202	202	175	17S	12	26.0	25.0
PV 6x8/2	25/32	25/32	8	141	141	755	45.5	296.5	165	16S	202	202	175	175	12	31.0	30.0
PV 6x11/3	25/32	25/32	11	141	141	860	45.5	401.5	165	165	202	202	175	175	12	36.0	35.0
PV 6x15/4	25/32	25/32	IS	141	141	1047	45.5	541.5	16S	165	202	202	195	195	12	46.0	4S.0
PV 8x4/15	40/50	40/50	4	141	141	615	45.5	156.5	16S	165	202	202	175	175	12	26.0	2S.0
PV 8x7/2	40/S0	40/50	7	141	141	720	45.5	261.5	165	165	202	202	175	175	12	31.0	M).O
PV 8x9/3	40/50	40/50	9	141	141	790	45.5	331.5	16S	16S	202	202	17S	175	12	36.0	3S.0
PV 8x12/4	40/50	40/50	12	141	141	942	45.5	436.5	165	165	202	202	195	195	12	46.0	4S.0
PV 8x16/5.5	40/50	40/50	16	141	141	1082	45.5	576.5	16S	165	202	202	195	195	12	•	50.0
PV 12x3/15	40/50	40/50	3	141	141	580	45.5	121.5	16S	16S	202	202	175	175	12	25.0	24.0
PV 12x5/2	40/50	40/50	5	141	141	650	45.5	191.5	165	165	202	202	175	175	12	30.0	29.0
PV 12x7/3	40/50	40/50	7	141	141	720	45.5	261.5	165	165	202	202	175	175	12	35.0	34.0
PV 12x9/4	40/50	40/50	9	141	141	837	45.5	331.5	165	165	202	202	195	195	12	45.0	44.0
PV 12x12/5.5	40/50	40/50	12	141	141	942	45.5	436.5	165	165	202	202	195	195	12	-	50.0
PV 12x17/7.5	40/50	40/50	17	141	141	1167	45.5	611.5	165	16S	202	202	204	204	12	-	60.0
PV 30x7/10	50/65	50/65	7	170	170	1046	62	416	187	187	230	230	260	260	12	-	86.0
PV 30x9/12	50/65	50/65	9	170	170	1153	62	523	187	187	230	230	260	260	12	-	92.0
PV 30x11/15	50/65	50/6S	11	170	170	1260	62	630	187	187	230	230	260	260	12	-	100

Product Specification (60HZ)

Product Description

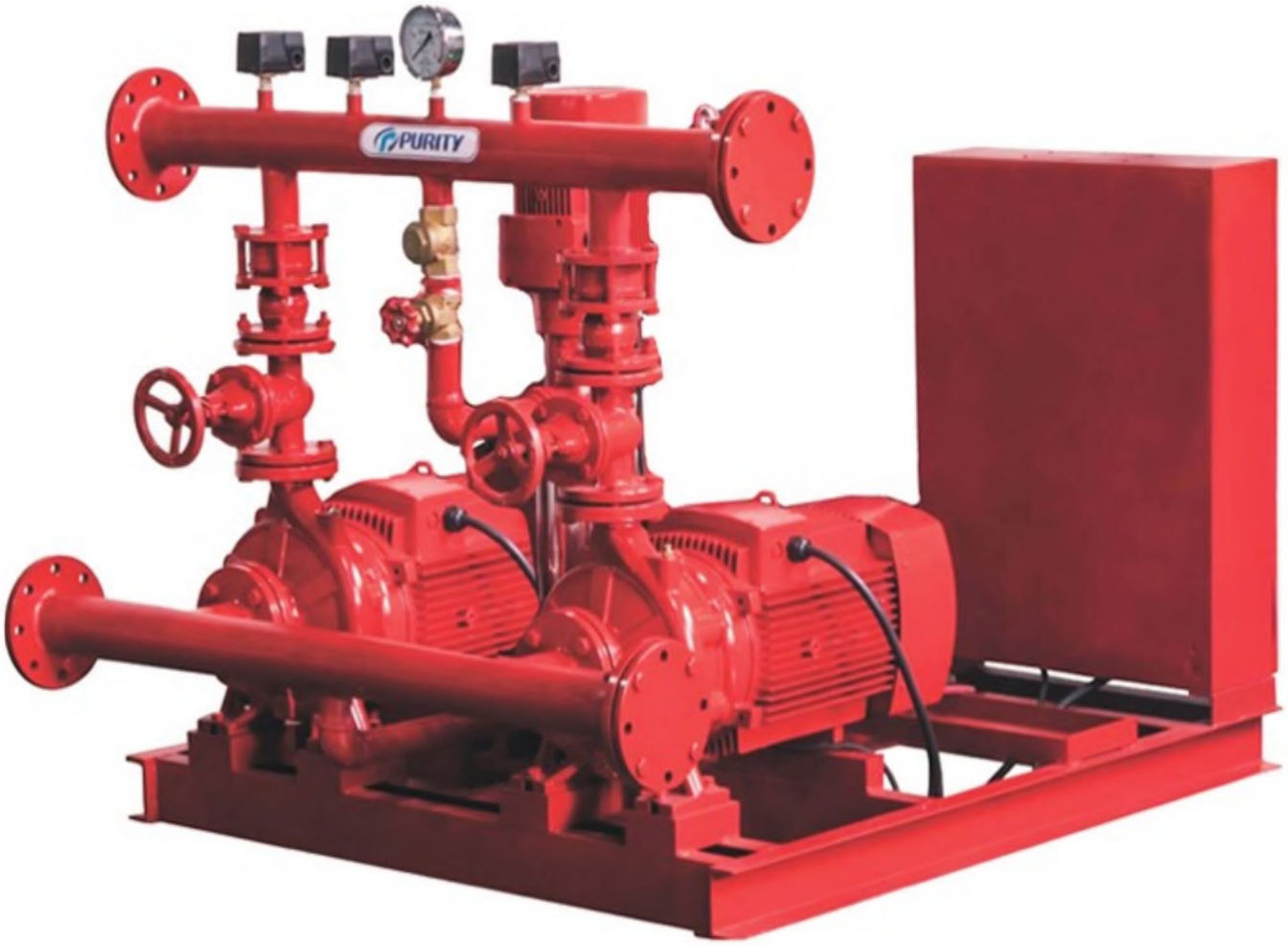

PV

TECHNICAL DESCRIPTION

New vertical multistage centrifugal pump
Original design by PURITY
Both square motor & round motor available
YE3 high efficient motor, with protection IP55 class F
Pump case with anti-corrosive coating
Impeller in techno-polimer
Shaft in stainless steel AISI 304 or galvanized iron
Suction and discharge port in cast iron G20 thread
Quality NSK bearing, wear resistance mechanical seal

APPLICATIONS

Suitable for use with clean water and liquids that are not chemically aggressive towards the materials from which the pump is made. The high efficiency and adaptability of these pumps to even the most unusual of applications,

makes them ideal for use in the domestic, civil and industrial sectors; in particular for the distribution of water in combination with pressure sets and for pressure boosting.

USING LIMITS

Liquid temperature between -10°C and +120°C
Ambient temperature up to +50°C
Max. working pressure 25 bar
Continuous service S1

PST

TECHNICAL DESCRIPTION

New EN733 standard centrifugal pump
Original design by PURITY (patented)
Both square motor & round motor available
YE3 high efficient motor, with protection IP55 class F
Pump case with anti-corrosive coating
Impeller in stainless steel AISI 304 or cast iron
Shaft in stainless steel AISI 304 or galvanized iron
Galvanized counter flange with bolts, nuts and gaskets
Quality NSK bearing, wear resistance mechanical seal

APPLICATIONS

Suitable for use with clean water and liquids that are not chemically aggressive towards the materials from which the pump is made.
The EN733 centrifugal pumps are recommended for use in water supply,

cleaning sets, pressure boosting, firefighting sets, irrigation, industrial applications, water circulation in climatisation sets, agricultural.

USING LIMITS

Liquid temperature between -10°C and +120°C
Ambient temperature up to +50°C
Max. working pressure 16 bar
Continuous service S1

PATENTS

Registered model PST
Registered Patent Design n° 201530478502.0

TECHICAL DATA/DATOS TECNICOS 50HZ n=2900 1/min

MODEL *MODELO*	Power Potencia kw	hp	US gpm l/min m³/h	Q=DEUVERY/ *CAUDAL* 0	26	40	66	79	106	119	1S9	185	211	238	317	370	396	476	529	608	793	925	DN mm
				0	100	150	250	300	400	450	600	700	800	900	1200	1400	1500	1800	2000	2300	^000	3500	
				0	6	9	15	18	24	27	36	42	48	54	72	84	90	108	120	158	180	210	
32*125/07	0.75	1		17.5	16.7	15	12	9															50x32
32-125/11	1.1	1.5		22	21	19.7	16.5	14.5	9														50x32
32-160/15	15	2		25.4	23.7	22.5	18.5	15.8															50x32
32-160/22	2.2	3		31	29.6	28.5	24.5	22	15														50x32
32-160/50	3			35	34.3	34	28	25.5	19	15													50x32
32-200/30	3	4		44.2	43	39.8	35.2	32.2	24.6	19.8													50x32
32-200/40	4	5.5		54.5	52	50	45.5	41.9	35	30.3													50x32
32-250/55	5.5	7.5		60	59.5	59	55	51	34.5														50x32
52-250/75	7.5	10		69.5	69	68.5	66	63	53														50x32
32-250/110	11	15		90	89.5	89	82	79	66														50x32
32-250/55D	5.5	7.5		79.5	74.7	71.8	63	56	37.5														50x32
32-250/75D	7.5	10		95	93	91	83	76	57.8														50x32
40-125/11	1.1	1.5		14.7				13.5	11.5	10.1	53												65x40
40-125/15	1.5	2		18.1				17	15	13.9	96	6											65x40
40-125/22	2.2	3		24.5				23.2	21.5	20.2	16	13	8.3										65x40
40-160/30	3	4		31.8				29.5	27.5	26.3	21.5	17.5											65x40
40-160/40	4	5.5		38				36	34	33	28.5	25	20.1										65x40
40-200/55	5.5	7.5		46				43.8	41.3	40.1	35	30											65x40
40-200/75	7.5	10		57				53.6	51.5	50	45	41	36.5										65x40
40-250/92	9.2	12.5		64				59	56.5	55	49.5	45	39.8										65x40
40-250/110	11	15		72				67.5	66	63.5	57.5	52.2	47										65x40
40-250/150	15	20		84.5				80	77.3	75.2	71	65	61										65x40
SO-125/22	22	3		17							15.4	14	12.8	11.5	6.5								65x50

50-125/S0	3	4		20							1&8	18	17	15.6	11								65x50
50-125/40	4	5.5		24							23.1	23	21.5	20.3	15.8	11.8							65x50
50-160/55	5.5	7.5	Head	32							30.6	30	28	26.6	20.5	14.8							65x50
50-160/75	7.5	10	H(m)	40							38	37	36	344	29	24	21						65x50
50-200/92	9.2	12.5		50.5							46.8	45	43	40.9	32.5	26.7							65x50
50-200/HO	11	15		57.5							53.5	52	50	47.5	40	34	29						65x50
50-200/150	15	20		62							58	56.5	54.5	52	44.5	39	35.5						65x50
50-250/150	15	20		68.5							64	63	61.5	59	50	41							65x50
50-250/185	18.5	25		79							75.8	74.8	74	71.5	63.5	55.5	47						65x50
50-250/220	22	30		89.5							86	85.3	84	81.5	73.5	65.5	57						65x50
65125/40	4	5.5		19									17.3	16.8	14.5	13	11.8						80x65
65-125/55	5.5	7.5		23									21.3	20.9	19	17.5	16.7	13.7					80x65
65-125/75	7.5	10		27									26	25.6	24.5	23	22.5	20	18				80x65
65-160/92	9.2	12.5		33										31.5	30	28	27.1	24	21.5				80x65
65-160/110	11	15		36										34.5	33	31.5	30.8	28	25.5				80x65
65-160/150	15	20		42										41	40	38.5	373	35	33	29.5			80x65
65-200/150	15	20		45										45.5	43	41	40,2	36.5	34				80x65
65-200/185	18.5	25		52										52.3	51	49	48.2	44.5	42				80x65
65200/220	22	30		59										59.5	58	56	55	52	49.5	44.5			80x65
65-250/220	22	30		64.8										64.7	62	60	58.5	53	50				80x65
65-250/500	30	40		80										79.8	77.5	75.5	74.5	70	66	58			80x65
65-250/370	37	50		92										90.5	88.5	87	85	80.5	78	68			80x65
80-125/40	4	5.5		17									16.5	15.9	14.3	13.5	11.6	10	7.5				100x80
80-125/55	5.5	7.5		21									20.5	20	19	18	16.5	15	12.5	9.5			100x80
80-125/75	7.5	10		26									25	25	24.5	23.8	22.5	21.5	19.5	16.5			100x80

TECHICAL DATA/DATOS TECNICOS 50HZ n=2900 1/min

MODEL MODELO	Power POTCnCIS		US gpm	Q=DELIVERY/ CAUDAL																		DN
				0	264	396	529	634	793	881	925	969	1057	1233	1322	1586	1762	2203	2643	3524	4405	
			l/min	0	1000	1500	2000	2400	3000	3333	3500	3666	4000	4666	5000	6000	6666	8333	10000	13333	16666	
		hp	m³/h	0	60	90	120	144	180	200	210	220	240	280	300	360	400	500	600	800	1000	mm
80-160/110	n	15		27	27	27.3	24.5	21.1	16													100x80
80-160/150	15	20		32.8	32.6	32.5	30.2	27	22.1	18.5	16.7											100x80
80-160/185	18.5	25		39	38.5	38	36.7	33.6	28.8	25.3	23.5											100x80
80-160/220	22	ao		44	43.5	43	4L7	38.6	33.8	30.3	28.5											100x80
80-200/220	22	30		48	47.7	47.5	43.5	39.2	32.5	27.2	24.5											100x80
80-200/300	30	40		60	59.7	59.5	57	53.1	47	42.7	40.5											100x80
80-250/370	37	50		71.5	70.9	70.5	65.5	59.3	51	43.2	38.5											100x80
80-250/450	45	60		88	86.7	86	83.6	78.5	70.5	60	51											100x80
80-250/550	55	75		94.5	94.5	94.5	91.8	87	79.5	72.1	68.3											100x80
100-160/150	15	20	Head	35	33.5	32.5	30	27.8	24.5	21.5	20	18.3	15									125x100
100-160/185	18.5	25	H(m)	38.5	37.5	36.5	34.3	32.2	29	25.7	24	22	18									125x100
100-160/220	22	JO		43	41	40	37.6	35.2	-	28.5	27	25.3	22									125x100
100-200/220	22	30		38.5	拖7	35.7	33.8	31.7	28.5	26.8	26	25	22.9	16.3	13							125x100
100-200/300	30	40		44.5	42.5	42	40.2	38.8	36.7	34.2	33	31.7	29	2L7	18							125x100
100-200/370	37	50		55	53	51	50.6	49.2	47	45	44	42.8	40.5	32.8	29							125x100
100-250/450	45	60		65	65	64	63	61	58	56	55	53.3	50	39	33.5							125x100
100-250/550	55	75		77	76	75.5	75	73.8	72	71.7	71.5	70.7	69	62.3	59							125x100
100-250/750	75	100		91	91	90.5	89.7	88	85.5	84	83.3	81.5	78	71.7	68.5	48						125x100

TECHNICAL DATA *IDATOS TiCNICOS* **50 Hz n=29001 /min**

MODEL *MODELO*	Power *Potencia*		us 卿	Q ^DELIVERY /C/K/D4L																				DN
				0	5	11	13	16	19	21	24	26	29	32	37	42	48	53	58	63	69	74	79	
			l/min	0	20	40	50	60	70	80	90	100	110	120	140	160	180	200	220	240	260	280	300	
	kw	hp	rr^h	0	12	2.4	3	3.6	4.2	4.8	5.4	6	6.6	7.2	8.4	9.6	10.8	12	13.2	14.4	15.6	16.8	18	mm
PV 4x7/1.5	1.1	1.5		60.7	56.8	52.1	49	4S.9	42.8	38.9	3S	30.3	2S.7	202										25x25
PV 4x9/2	1.5	2		78	73	67	63	59	55	50	45	39	33	26										25x25
PV 4x13/3	2.2	3		113	105	96.8	91	85.2	79.4	72.2	65	56.3	47.7	37.5										25x25
PV 4x16/4	3	4		139	130	119	112	105	97.8	88.9	80	69.3	58.7	46.2										25x25
PV6x 5/1.5	1.1	1.5		44.4				135.5	333	30.9	28.4	26.1	23.4	20.2	14.3	6.8								32x32
PV6xft/2	IS	2		71.1				56.7	53.2	49.5	45.5	41.8	37.5	32.4	22.9	10.9								32x32
PV6xU/3	2.2	3		97.7				78	73.2	68	62.5	57.5	51.5	44.5	31.5	15								32x32
PV 6x15/4	3	4		133				106	99.8	92.7	85.2	78.4	70.2	60.7	43	20.S								32x32
PV8x4/1.5	1.1	1.5		36.8						30	28.4	27.2	26	24.4	21.2	17.6	132	9.2	4.8					40x40
PV 8x7/2	1.5	2	H(m)	64.4						52.5	49.7	47.6	45.5	42.7	37.1	30.8	23.1	16.1	8.4					40x40
PV 8x9/3	2.2	3		82.8						67.5	63.9	61.2	S8.5	54.9	47.7	39.6	29.7	20.7	10.8					40x40
PV 8x12/4	3	4		110						90	85.2	81.6	78	73.2	63.6	52.8	39J6	27.6	14.4					40x40
PV 8x16/5.5	4	5.5		147						120	114	109	104	97.6	84.8	70.4	S23	36.8	19.2					40x40
PV 12x3/1.5	1.1	1.5		31								25.4	24.7	24	22.4	20.6	18.4	16.2	133	10.9	83	5.1	2	50x50
PV 12x5/2	1.5	2		51.7								42.4	41.2	40	37.3	34.3	30.7	27	22.2	18.2	13.8	85	3.3	50x50
PV 12x7/3	2.2	3		72.3								593	57.6	56	523	48.1	43	37.8	31	25.5	19.4	11.9	4.7	50x50
PV 12x9/4	3	4		93								76.2	74.1	72	67.2	61.8	552	48.6	39.9	32.8	24.9	15.4	6	50x50
PV 12x12/5.5	4	5.5		122								102	98.8	96	89.6	82.4	73J6	64.8	512	43.8	33.2	20.5	8	50x50
PV 12x17/75	5.5	7.5		176								144	140	136	127	117	104	91.8	75.4	62	47	29	11.3	50x50

MODEL *MODELO*	Power *Potencia*		us 卯m	Q=DELIVERY /C4yDA£									DN
				0	26	S3	79	ioe	132	159	185	211	
			l/min	0	100	200	300	400	500	600	700	800	
	kw	hp	m³/h	0	6	12	18	24	30	36	42	48	mm
PV 30x7/10	7.5	10		104	100	93	83	74	64	49	31	4	50x50
PV 30x9/12	9.2	12.5	H(m)	133	128	119	108	96	82	63	40	5	65x65
PV 30x11/15	11	IS		163	156	145	132	116	99	77	48	6	

MATERIAL DESCRIPTION /DESCRIPCI6N DE MATERIAL

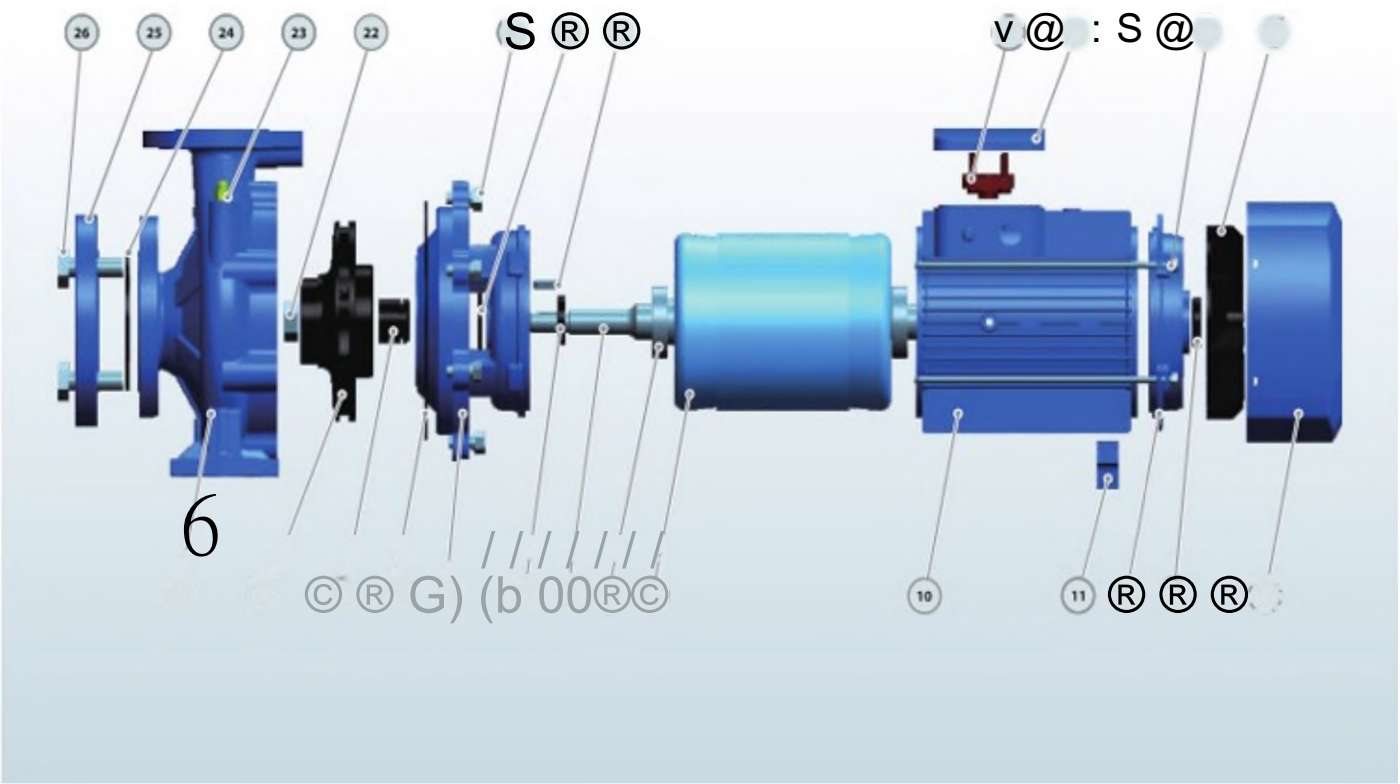

No.	Description	Material	No.	Description	Material	No.	Description	Material
1	Pump Case	Cast iron	10	Motor Case	Aluminum	19	Impeller Key	Iron
2	Impeller	SS304/Cast iron	11	Support Foot	Plastic	20	Water Deflector	Rubber
3	Mechanical Seal	SiC/Carbon/SS304	12	Back Cover	Cast iron	21	Connection Bolt	Steel
4	O-ring	Rubber	13	Reinforced Seal	Rubber	22	Impeller Nut	Galvanizated Steel
5	Connection	Cast iron	14	Fan Cover	Aluminum	23	Release Valve	Brass
6	Reinforced Seal	Rubber	15	Fan	Plastic	24	Gasket	Rubber
7	Shaft	SS304/45# Steel	16	Through Bolt	Steel	25	Counter Flange	Galvanizated Cast iron
8	Bearing	Ball Bearing	17	Terminal Box	Aluminum	26	Flange Bolt	Steel
9	Wound Stator/Rotor	Silicon Steel/Copper	18	Terminal Board	Plastic			

DIMENSIONS AND WEIGHT / *DIMENSIONES Y PESOS*

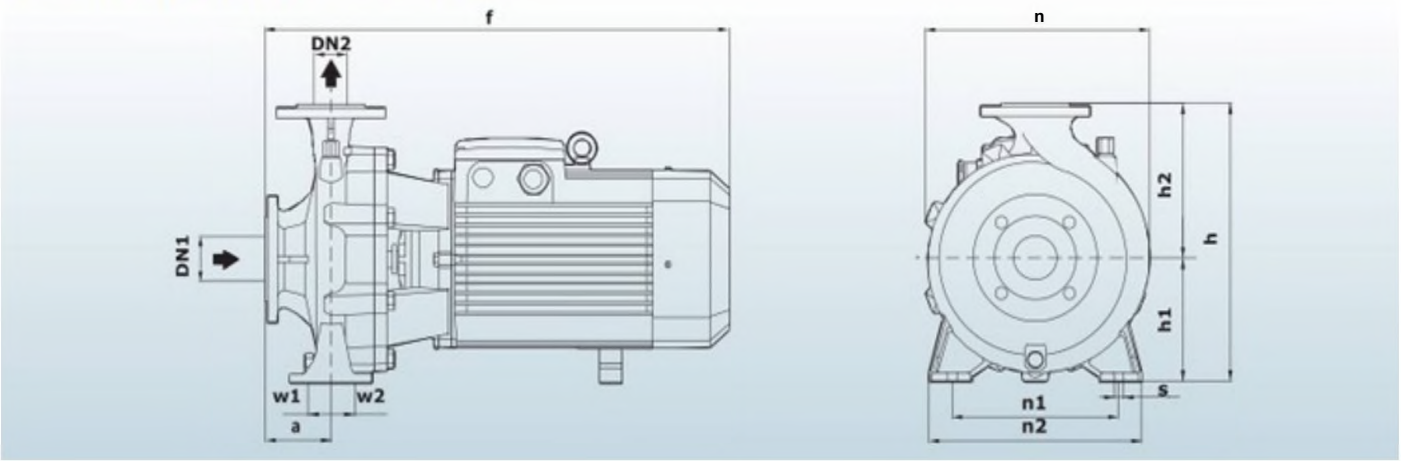

MODEL/MODELO		DIMENSIONS / *DIMENSIONES* mm													kg	
Single-phase *Monofdsico*	Three-phase *Tftfysico*	DN1	DN2	a		f	h	hi	h2	n	nl		n2	w1	w2	s	1~	3~
32-125/7	32-125/7																27	24
32-125/11	32-125/11			80		435	2S5	114	141	202	140		190				28	25
32-160/15	32-160/15																5	S
32-160/22	32-160/22			83			295	133	162	245			245	3S	35	15		
32-160/30	32160/30					470					190						54	50
32-200/30	32-200/30	50	32	82		490	342	161	181	26S			240				S6	S2
-	32-200/40																	S3
-	32-250/55																-	66
-	32-250/75			88		S90	405	186	219	333	250		328	49	49	16	-	73
-	32-250/110																-	
-	32-250/550																-	95
-	32-250/75D			160		610	362	162	200	330	216		280			14	-	73
40-125/11	40-125/11																30	80
40-125/15	40-125/15			82		440	260	116	144	220	160		212				33	
40-125/22	40-125/22													37	37		M	34 27
40-160/30	40-160/30			80		490	305	13S	170	250	190		241				52	4S 29
-	40*160/40		40														.	50
-	40-200/55			102		S60	34S	162	193	282	214		267				-	66
-	40-200/75																.	73
-	40-250/92			94		712	41S	186	*229*	327	250		327	49	49		-	100
-	40-250/110																.116	
-	40-250/150	6S															■	146
50-125/22	50-125/22																45	41
50-125/30	50-125/30			102		52$	305	135	170	263	190		245				54	S0
-	50125/40																•	52
-	50-160/55			110		560	348	164	193	270	*212*		262	37	37		-	64
-	50-160/75		50													15	垂	71
-	50-200/92			104		722	392	186	206	307	*232*		310				-	90
-	50-200/110																L •	106
-	50-250/150																-	145
-	50-250/185			102		720	416	186	230	330	250		327				-	153
-	50-250/220																-	183
-	65 125/40																•	56
-	65-125/55			104		580	34S	162	193	275	212		280				-	68
-	65-125/75																•	74
-	65-160/92																-	90
-	65 160/110	80	65	110		730			239								-	106
-	6S160/1S0						425	186			232		*309*	49	49		-	134
-	65-200/150																• —	140
-	6S-200/18S			111		740			240								-	145
-	65-200/220									330							•	18S
-	80-125/40																-	56
-	80-125/55			117			357	163	194		212		280				! -	68
-	80-125/75	ion	80			750											-	74
-	80-160/110																-	113
-	80-160/1S0			88							2S5		332				-	143
-	80-160/185-220						435	186	250								:-	150
-	100-160/150																-	143
-	100-160/185	12S	100	130		765				34S	*262*		340	55	55	16	-	150
-	100-160/220																-	133

DIMENSIONS AND WEIGHT / *DIMENSIONES Y PESOS*

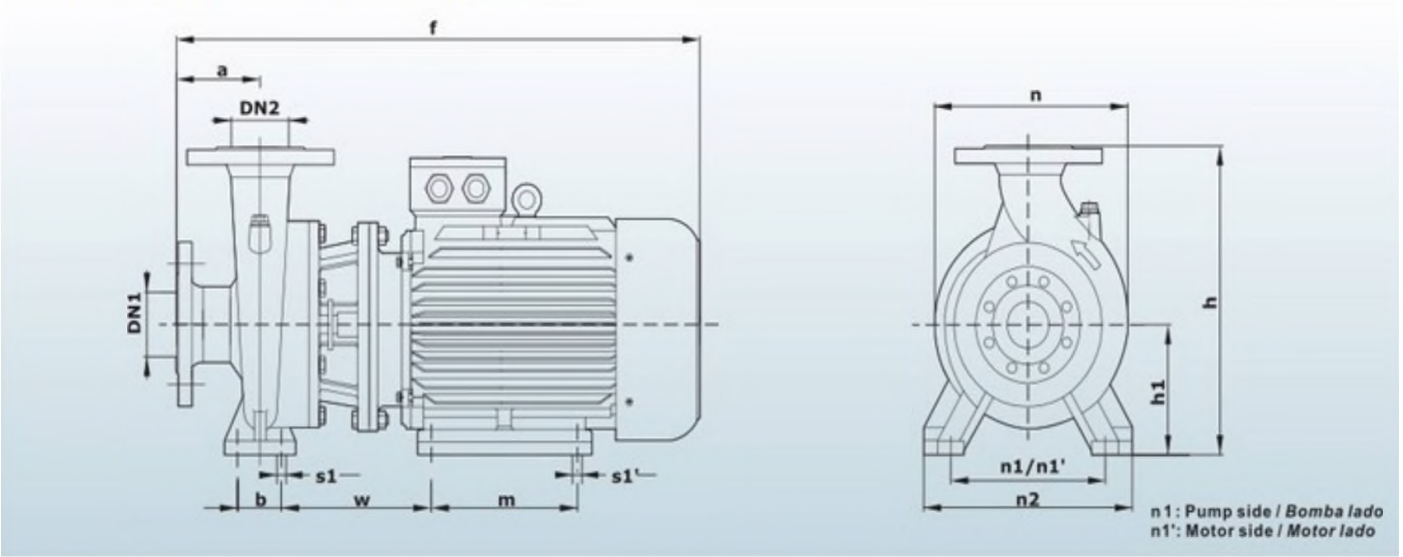

MODEL/MODELO Three-phase *TrifAsico*	DIMENSIONS / *DIMENSIONES* mm															kg
	DN1	DN2	a	f	h	hi	n	n1	nt	n2	b	w	m	s1	s1*	3~
65-250/220	80	65	116	870	420	180	369	260	279	320	70	246	241	18	15	210
65-250/300				990	456	195		250	318	327		293	30S		19	230
65-250/370																240
80-200/220	100	80	118	880	460	250	360	310	279	260	95	258		20		212
80-200/300				950					318			246	241		15	222
80.250/370			130		537		490			310		228	305		19	245
80-250/450				980					356			229	311			385
80-250/550				1160					406			363	349		24	497
100-200/220	125	100	140	910	530	225	422	324	279	402	115	256	305	18	15	217
100-200/300				102S					318			248	241			227
100-200/370																250
100-250/450				1000	580	250	418	310	356	402	95	224	311	20	19	390
100-250/550				1180					406			32S	349		20	503
100250/750				1250		280			436							535

COUNTER FLANGE / *CONTRABRIDA*

DN	D	K	HOLES *ORIfiOOS*	
	mm	mm	N	(Pmm
32	140	100		
40	150	110		
SO	165	125		
6S	185	145		18
80	200	160		
100	220	180		
12S	250	210	8	
150	285	240		22
200	340	295		
250	40S	35S	12	26

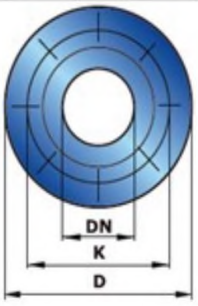

PIPE RECOMMEND /H/SfR/A *RECOMENDADA*

SERIES *SERIE*	SUCTION *ASPIRAObN*	DISCHARGE *IMPULSIdN*	PIPE RECOMMEND *TUBERIA RECOMENDADA* SUCTION *ASPIMOON*	DISCHARGE *IMPULMN*
32	50mm	32mm	27,"-3-	2*-27/
40	6Smm	40mm	3M-	27a.-3.
50	65mm	50mm	4 ,	3*
65	80mm	65mm	$•	4.
80	100mm	80mm	6-	5-
100	125mm	100mm	8"	6-
12S	150mm	125 mm	10.	8-
ISO	200mm	150mm	12-	W
200	250mm	200mm	14.	ir
2S0	300mm	250mm	16*	14'

PERFORMANCE CURVE / *CURVAS DEFUNCIONAMIENTO*

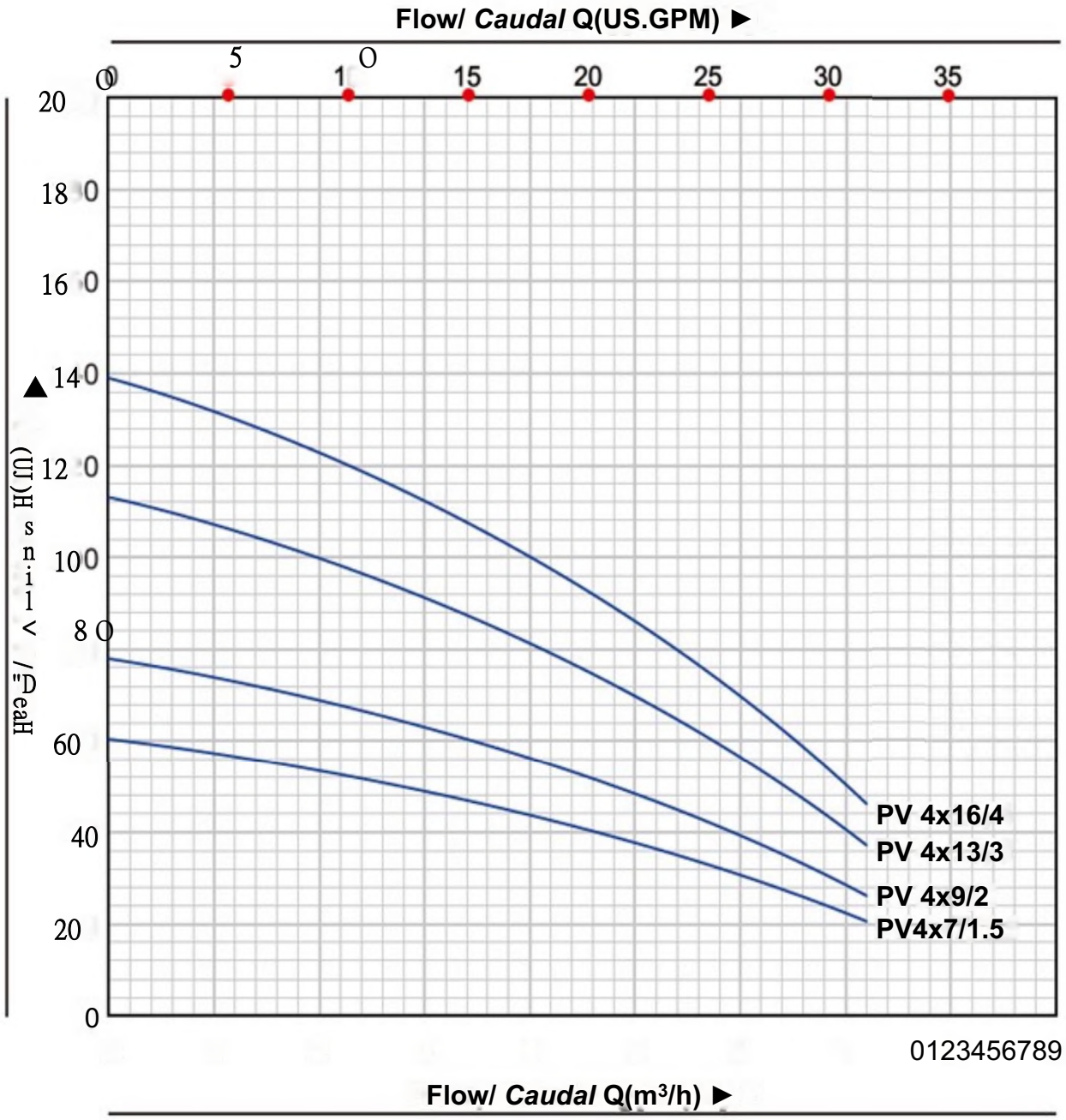

50 Hz n=29001/min

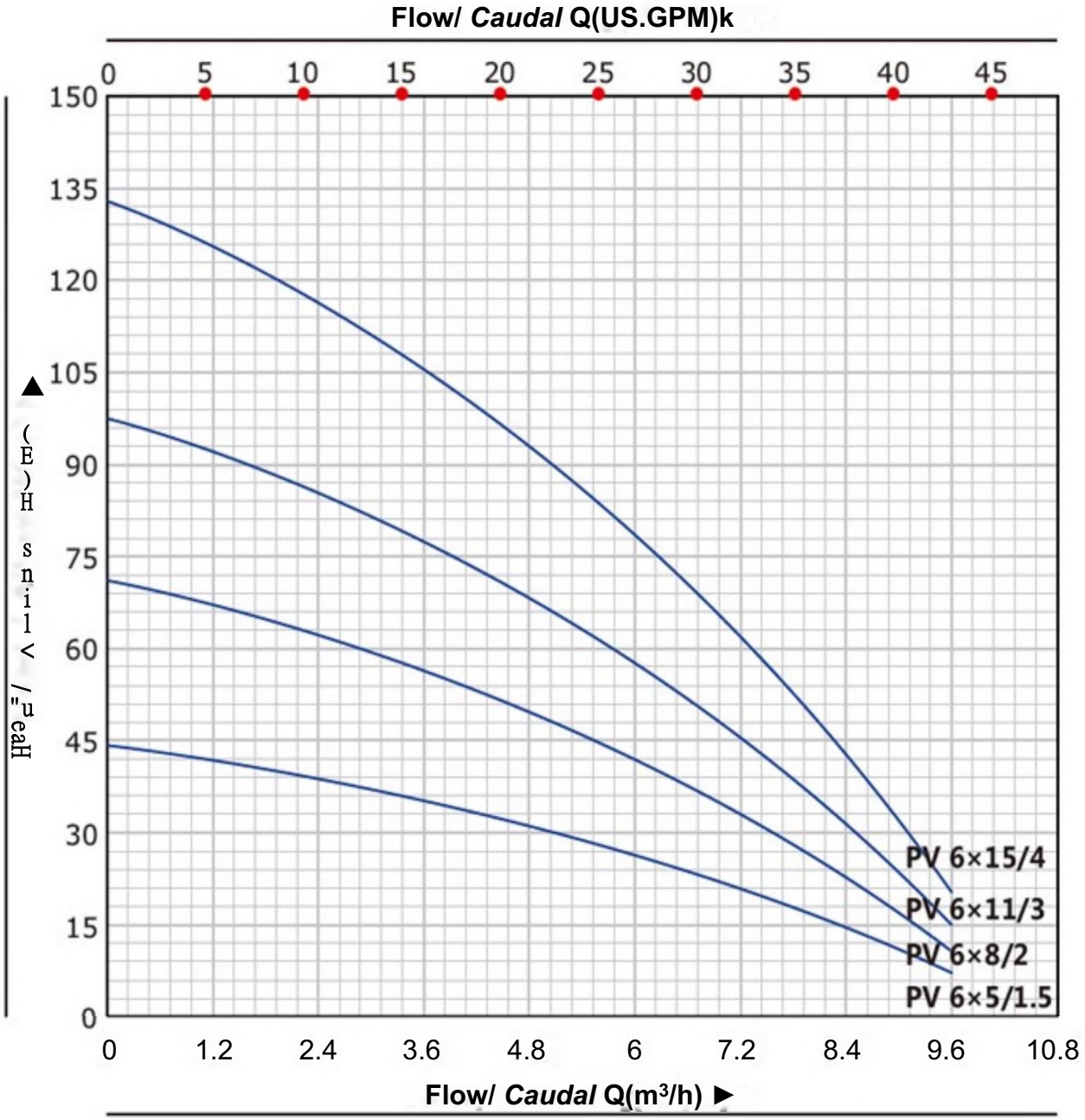

PERFORMANCE CURVE / *CURVAS DEFUNCIONAMIENTO*

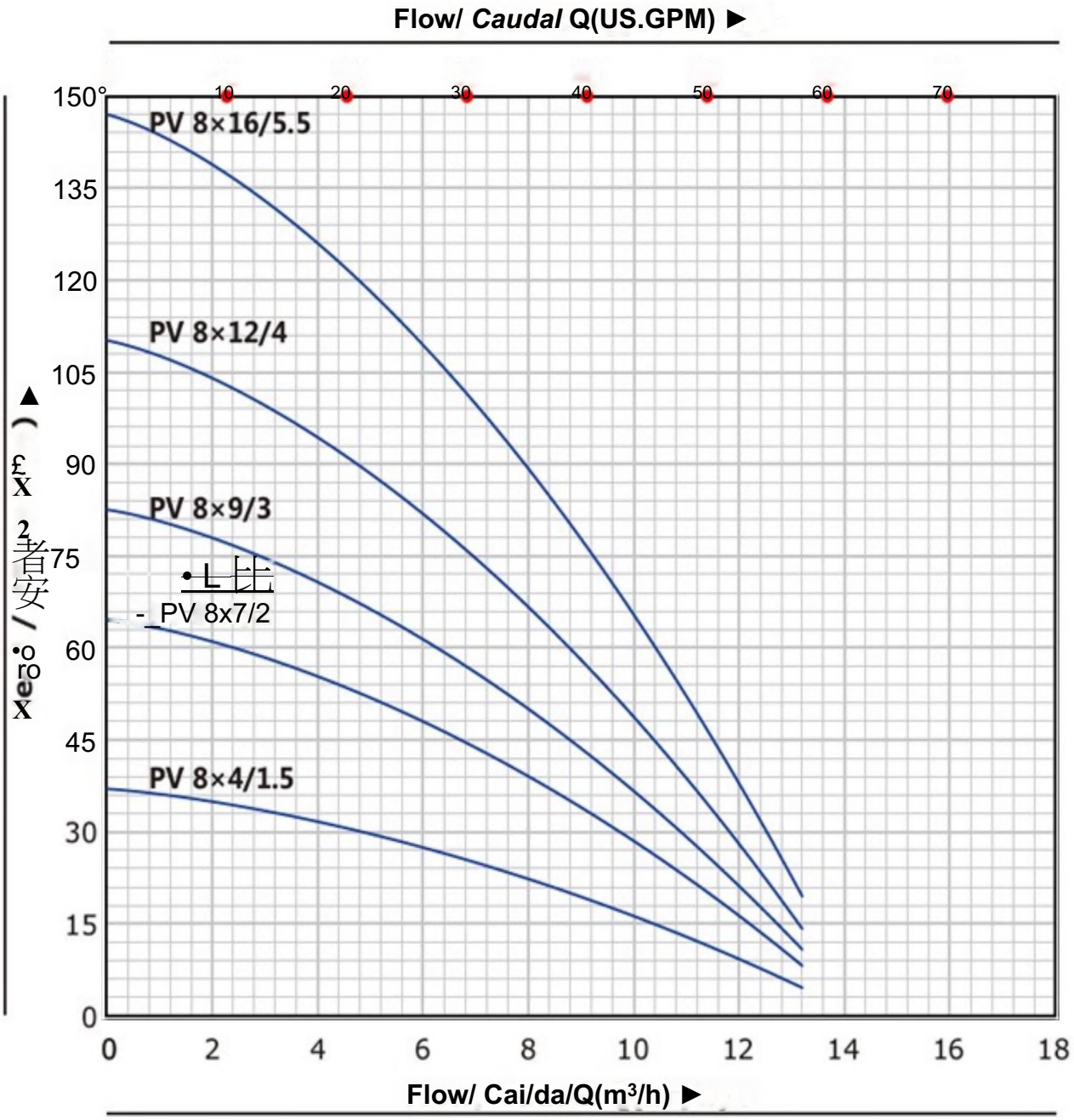

50 Hz n=29001/min

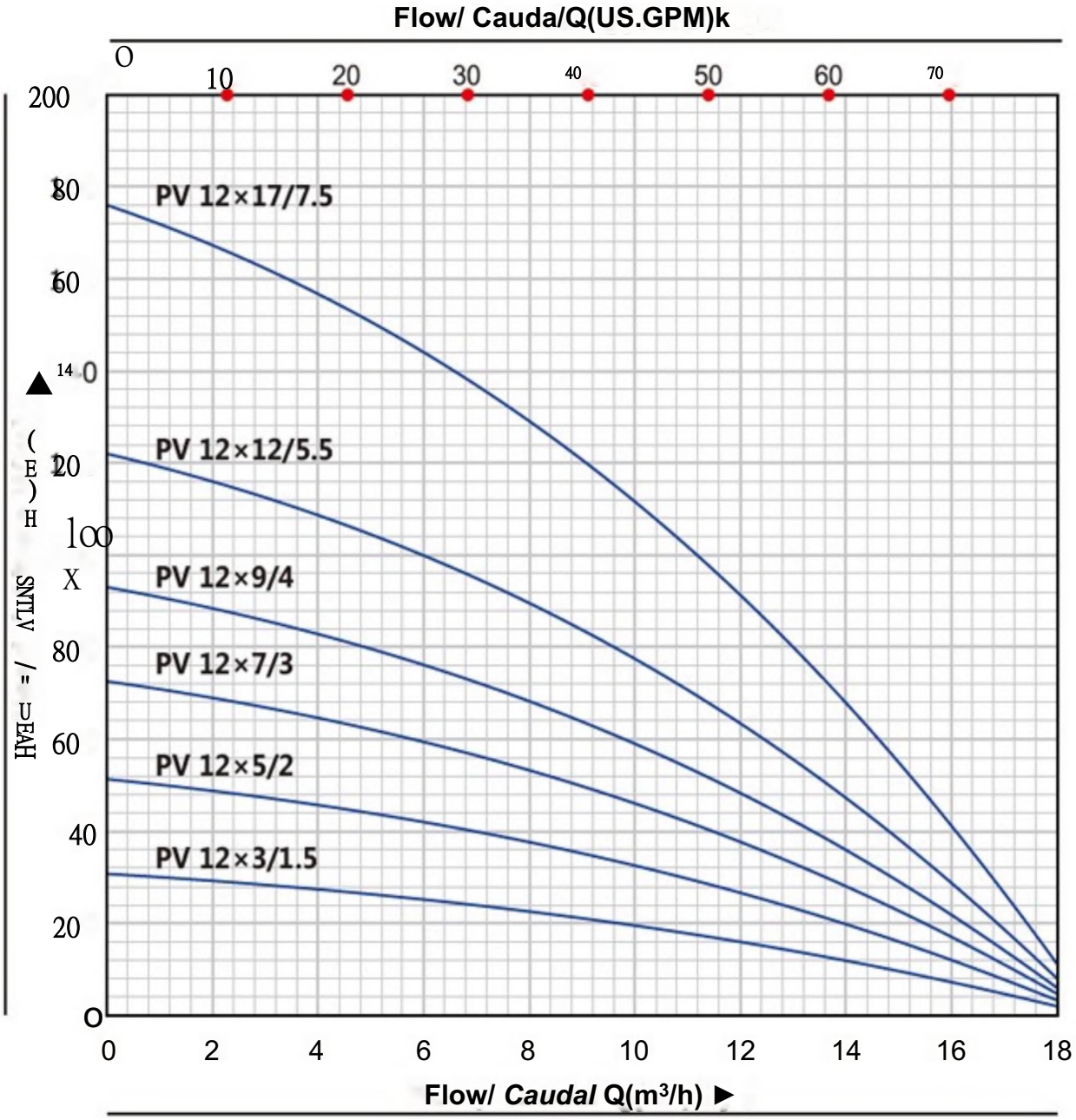

MATERIAL DESCRIPTION / *DESCRIPCIdN DE MATERIAL*

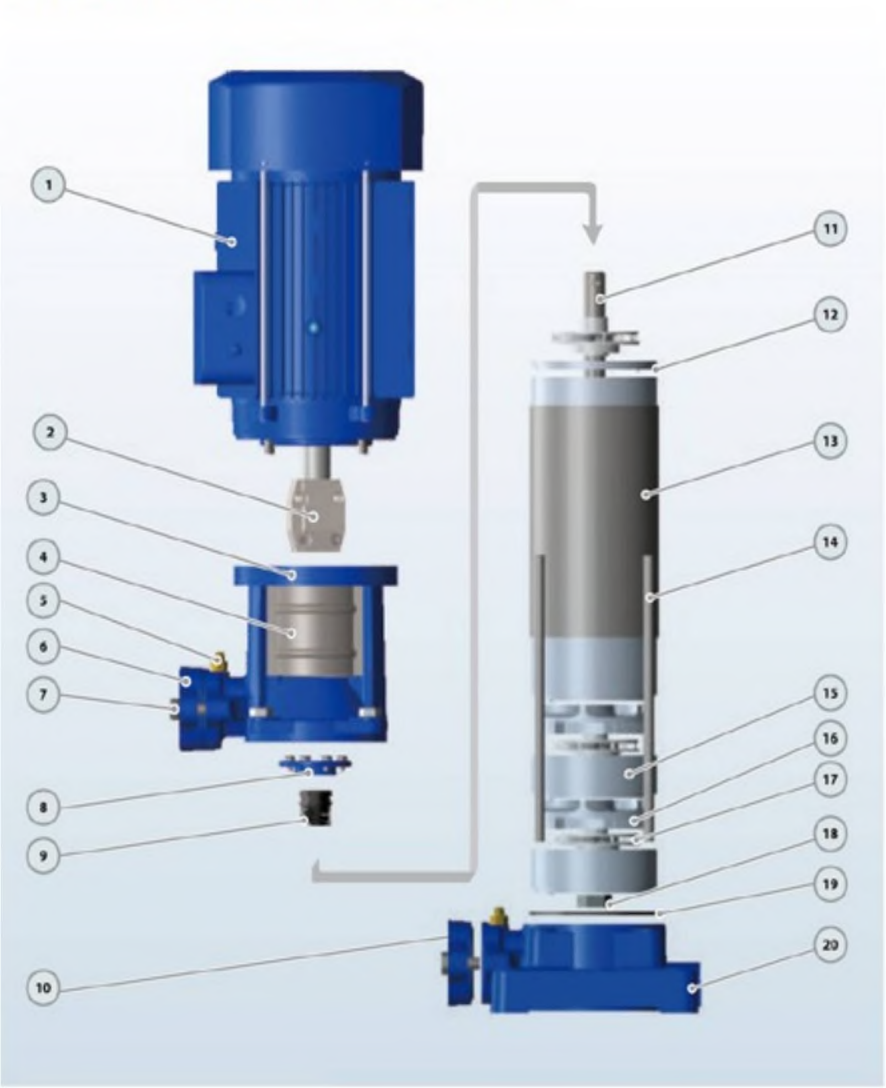

No.	Description *Descripdon*	Material *Material*
1	Motor *Motor*	IP55 Class F *IP55Cto&eF*
2	CoupSng *Unión*	Iron *Hierro*
3	Discharge Body *Cuerpo Impuisidn*	Cast iron *Fundicidn*
4	Cover *Tapa*	SS304 *咖(304*
S	Release VaVe *Tap6n Cebado*	Brass *Brcncc*
6	Discharge *Impuisidti*	Cast iron *Fundtcion*
7	Bot Porno	Steel *Ac^ro*
8	Seal Cover *Topa G ene*	Cast iron *Fundicibn*
9	Mechanical Sod *Cierre MecAnico*	SiC?Carbon/SS304 *SiC-Grsfik>-Inox304*
10	Suction *Aspiracidn*	Cast iron *Fundidoii*
11	Pump Shaft *E/e*	SS304/45# Iren *Inox* 304/45# *h^rro*
12	Diffuser Top Cover *Tope Taf>e Difu^or*	Tech nopoli mer *TecnopoHmero*
13	Punp Cover *Tapa Bemba*	SS304 *Inox 304*
14	Through Boll *Porno*	Steel *AOBIV*
15	Dffuser Cover *Tapa Dfusof*	TiBchnopofcn9rMhSS3O1mg *lecnopobrKm con Inox anHo*
16	Dffuser *Difusor*	Techropoifn9rv4fiSS3O4mg 7ecr) cpo/4niero con *Inox anifo*
17	Impe^er *Impulsor*	Techncpolimer *Tecnopctimero*
18	Impeler Nut *Tuerca de Impulsor*	Galvanizated Sleel *Acoro Gelvonizado*
19	0, *Junta TMca*	Rubber *Caucho*
20	Suction Body *Cuerpo Aspuwdn*	Cast iron *Fundkidn*

PERFORMANCE CURVE *ICURVAS DEFUNCIONAMIENTO*

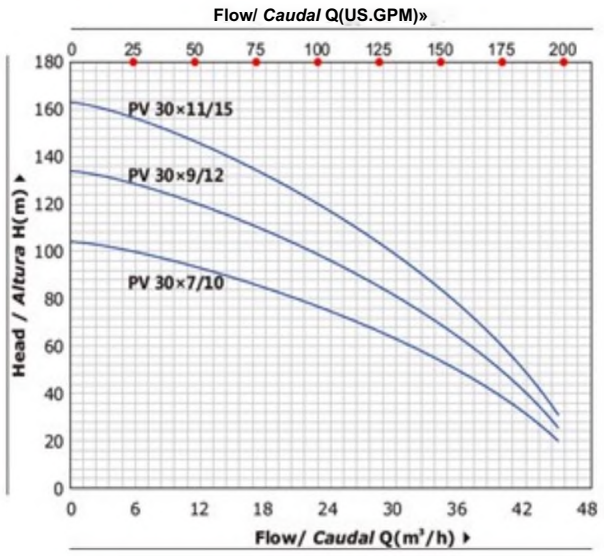

DIMENSIONS AND WEIGHT / *DIMENSIONESY PESOS*

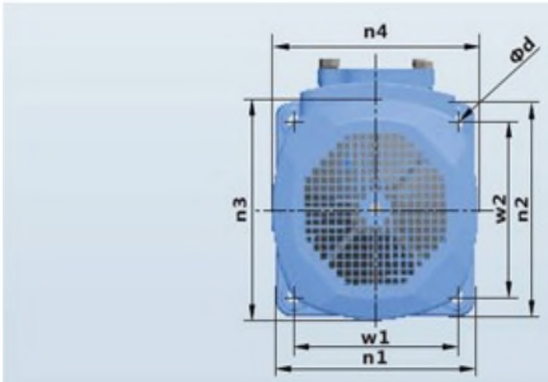

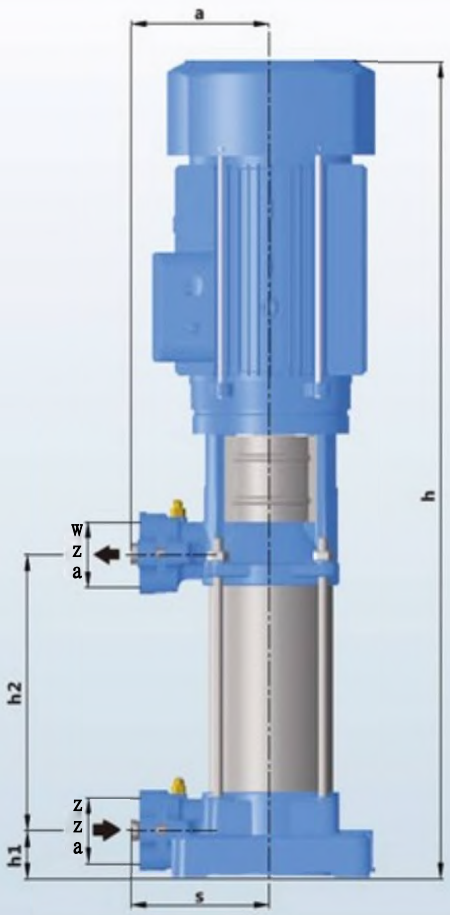

MODEL *MODELO*	DIMENSIONS *1 DiMENSIONES* mm															kg	
	DN1	DN2	N	a	9	h	hi	h2	wl	w2	n1	n2	n3	n4	d	1~	3-
PV4x7/l,5	25/32	25/32	7	141	141	720	45.5	261.5	165	16S	202	202	175	175	12	28.0	27.0
PV 4x9/2	25/32	25/32	9	141	141	790	45.5	331.5	165	16S	202	202	175	175	12	33.0	32.0
PV 4x13/3	25/32	25/32	13	141	141	930	45.5	471.5	16S	16S	202	202	175	17S	12	38.0	37.0
PV 4x16/4	25/32	25/32	16	141	141	1082	45.5	576.5	165	16S	202	202	195	195	12	48.0	47.0
PV6x5/1.5	25/32	25/32	s	141	141	650	45.5	191.5	16S	165	202	202	175	17S	12	26.0	25.0
PV 6x8/2	25/32	25/32	8	141	141	755	45.5	296.5	165	16S	202	202	175	175	12	31.0	30.0
PV 6x11/3	25/32	25/32	11	141	141	860	45.5	401.5	165	165	202	202	175	175	12	36.0	35.0
PV 6x15/4	25/32	25/32	IS	141	141	1047	45.5	541.5	16S	165	202	202	195	195	12	46.0	4S.0
PV 8x4/15	40/50	40/50	4	141	141	615	45.5	156.5	16S	165	202	202	175	175	12	26.0	2S.0
PV 8x7/2	40/S0	40/50	7	141	141	720	45.5	261.5	165	165	202	202	175	175	12	31.0	M).O
PV 8x9/3	40/50	40/50	9	141	141	790	45.5	331.5	16S	16S	202	202	17S	175	12	36.0	3S.0
PV 8x12/4	40/50	40/50	12	141	141	942	45.5	436.5	165	165	202	202	195	195	12	46.0	4S.0
PV 8x16/5.5	40/50	40/50	16	141	141	1082	45.5	576.5	16S	165	202	202	195	195	12	•	50.0
PV 12x3/15	40/50	40/50	3	141	141	580	45.5	121.5	16S	16S	202	202	175	175	12	25.0	24.0
PV 12x5/2	40/50	40/50	5	141	141	650	45.5	191.5	165	165	202	202	175	175	12	30.0	29.0
PV 12x7/3	40/50	40/50	7	141	141	720	45.5	261.5	165	165	202	202	175	175	12	35.0	34.0
PV 12x9/4	40/50	40/50	9	141	141	837	45.5	331.5	165	165	202	202	195	195	12	45.0	44.0
PV 12x12/5.5	40/50	40/50	12	141	141	942	45.5	436.5	165	165	202	202	195	195	12	-	50.0
PV 12x17/7.5	40/50	40/50	17	141	141	1167	45.5	611.5	165	16S	202	202	204	204	12	-	60.0
PV 30x7/10	50/65	50/65	7	170	170	1046	62	416	187	187	230	230	260	260	12	-	86.0
PV 30x9/12	50/65	50/65	9	170	170	1153	62	523	187	187	230	230	260	260	12	-	92.0
PV 30x11/15	50/65	50/6S	11	170	170	1260	62	630	187	187	230	230	260	260	12	-	100

Fire Pump System PEDT

PEDT Fire Pump Set Double Impeller Pump with Pressure Tank

TECHNICAL DESCRIPTION

• Original design by PURITY

■ Both square motor & round motor available

■ YE3 high efficient motor, with protection IP55 class F

• Pump case with anti-corrosive coating

■ Impeller in techno-polimer

• Shaft in stainless steel AISI 304 or galvanized iron

• Suction and discharge port in cast iron G20 thread

■ Quality N8K bearing, wear resistance mechanical seal

Product Specification (50HZ)

Product Description

PEDT(P2C+PSD+Pressure Tank+Control Cabinet)

P2C

TECHNICAL DESCRIPTION
New double impeller centrifugal pump
Original design by PURITY
Both square motor & round motor available

YE3 high efficient motor, with protection IP55 class F
Pump case with anti-corrosive coating
Double impeller in brass
Shaft in stainless steel AISI 304 or galvanized iron
Suction and discharge port in G20 thread
Quality NSK bearing, wear resistance mechanical seal

APPLICATIONS

Suitable for use with clean water and liquids that are not chemically aggressive towards the materials from which the pump is made.
The high efficiency and adaptability of these pumps to even the most unusual of applications, makes them ideal for use in the domestic, civil and industrial sectors; in particular for the distribution of water in combination with pressure sets, for pressure boosting and in fire-fighting sets.

USING LIMITS

Liquid temperature between -10°C and +120°C
Ambient temperature up to +50°C
Max. working pressure 16 bar
Continuous service S1

PD

TECHNICAL DATA

Model	178	186	188	192	380	385	480	485	490N	490	495
Type	Single-cylinder,4-stroke,air-cooled				Direct Injection, Water-cooling, Four Stroke						
Intake Type	Naturally Aspirated										
Bore*Stroke(mm*mm)	78*62	86*72	88*75	92*75	80*90	85*90	80*90	85*100	90*100	90*105	95*105
Cylinder No.	1	1	1	1	3	3	4	4	4	4	4
Displacement (L)	0.296	0.418	0.456	0.499	1.357	1.532	1.8	2.27	2.54	2.67	2.977
Rated Power/ Speed (kW/r/min)	3.7/3000 4.0/3600	5.7/3000 6.3/3600	6.6/3000 7.2/3600	7.5/3000 8.2/3600	20/3000	24/3000	28/3000	26/3000	42/3000	45/3000	50/3000
Horse Power	5.0/3000 5.5/3600	7.8/3000 8.6/3600	9.0/3000 10.0/3600	10.2/3000 12.0/3600	27	32	38	49	58	61	68
Power Coverage(kW)	≤11	≤11	≤11	≤11	≤37	≤37	≤37	≤55	≤55	≤55	≤75

Model	498	4102	4105	4108	485Z	490NZ	490Z	498Z	4102Z	4105Z	4108Z
Type	Direct Injection, Water-cooling, Four Stroke										
Intake Type	Naturally Aspirated				Turbo-charging						
Bore*Stroke(mm*mm)	98*105	102*118	105*118	108*118	85*100	90*100	90*105	98*105	102*118	105*118	108*118
Cylinder No.	4	4	4	4	4	4	4	4	4	4	4
Displacement (L)	3.168	3.857	4.087	4.324	2.27	2.54	2.67	3.168	3.857	4.087	4.324
Rated Power/ Speed(kW/r/min)	54/3000	62/3000	67/3000	73/3000	44/3000	50/3000	55/3000	60/3000	73/3000	75/3000	83/3000
Horse Power	73	85	91	99	60	68	75	81	99	102	113
Power Coverage(kW)	≤75	≤100	≤100	≤100	≤55	≤55	≤55	≤75	≤100	≤100	≤100

P2C

TECHNICAL DATA / DATOS TECNICOS **50Hz n=2900 1/min**

MODEL	Power		l/min	Q=DELIVERY																			DN
				0	40	50	60	70	80	90	100	110	120	140	160	180	200	250	300	350	400	450	
	kw	hp	m^3/h	0	2.4	3	3.6	4.2	4.8	5.4	6	6.6	7.2	8.4	9.6	10.8	12	15	18	21	24	27	mm
25-140/11	1.1	1.5		54	47.5	44.5	41	37	33	28	22												32x25
25-140/15	1.5	2	**Head**	67	60	57	54	50	45	40	32												32x25
25-160/11	1.1	1.5	**H(m)**	47	44	42	40	38	**35**	33	30	27	24										32x25
25-160/15	1.5	2		58	54	53	51	49	47	45	43	40	37	30									32x25

25-160/22	2.2	3	68	64.5	63	62	60	58	56	54	51	48	41	32								32x25
32-200/30	3	4	70					63	62	60.5	59	57	55	52	49.5	46.5	36					40x32
32-200/40	4	5.5	85					77	76	75	74	72	69	66	62	58	49					40x32
32-210/55	5.5	7.5	94					91	90	89	87	85	83	79	75	70	56					50x32
32-210/75	7.5	10	112					110	109	108	107	105	102	99	94	89	74					50x32
40-210/55	5.5	7.5	94					91	90	89	87	85	83	79	75	70	56					50x40
40-210/75	7.5	10	112					110	109	108	107	105	102	99	94	89	74					50x40
50-180/40	4	5.5	62					59	58	57	56	55	55	50	48	44	36	31	23			50x50
50-180/55	5.5	7.5	72					69	68	67	66	65	65	60	58	54	46	41	33			50x50
50-180/75	7.5	10	84					81	80	79	78	76	75	72	72	66	58	53	45			50x50
40-200/92	9.2	12.5	97										91.5	91	90	88	85	80	74	68	61	50x40
40-200/110	11	15	105										100	99	98	97	93	88	83	76	69	50x40
50-200/92	9.2	12.5	97										91.5	91	90	88	85	80	74	68	61	50x50
50-200/110	11	15	105										100	99	98	97	93	88	83	76	69	50x50
40-250/130	13	17.5	120										114	113	112	110	107	103	98	91	82	50x40
40-250/150	15	20	130										124	123	122	120	117	113	108	102	92	50x40
40-250/185	18.5	25	145										139	138	137	136	131	126	121	114	107	50x40
40-250/220	22	30	160										155	153	152	151	146	141	135	130	122	50x40
50-250/130	13	17.5	120										114	113	112	110	107	103	98	91	82	50x50
50-250/150	15	20	130										124	123	122	120	117	113	108	102	92	50x50
50-250/185	18.5	25	145										139	138	137	136	131	126	121	114	107	50x50
50-250/220	22	30	160										155	153	152	151	146	141	135	130	122	50x50

PERFORMANCE CURVE / *CURVASDEFUNCIONAMIENTO*

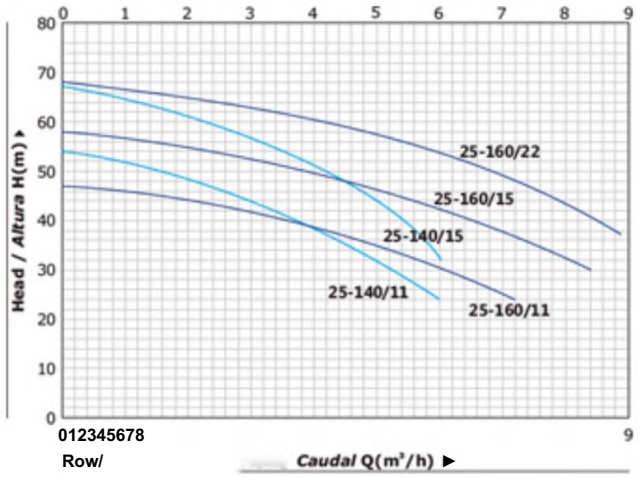

50 Hz n=2900 1/min

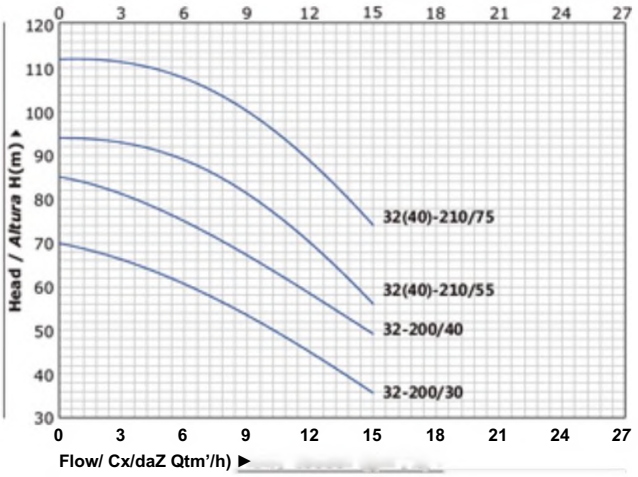

PERFORMANCE CURVE / *CURVAS DE FUNCIONAMIENTO*

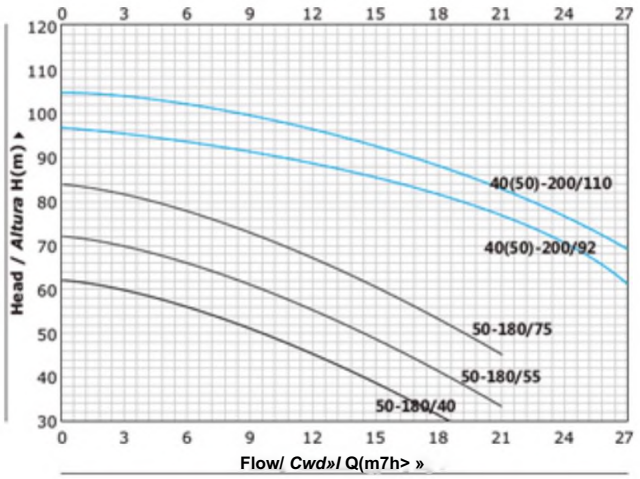

50 Hz n=2900 1/min

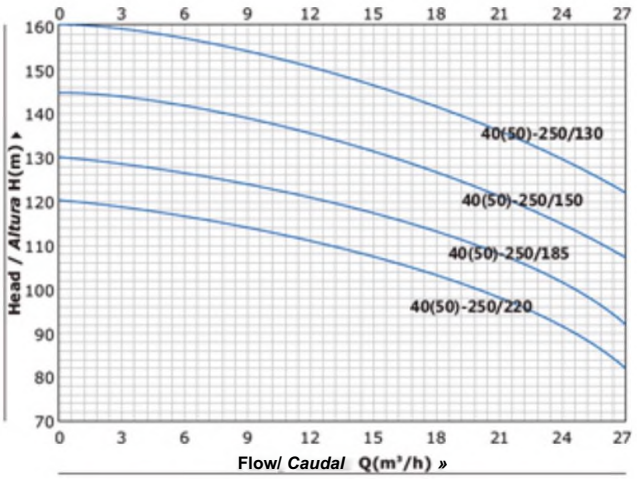

MATERIAL DESCRIPTION / *DESCRIPCI6N DE MATERIAL*

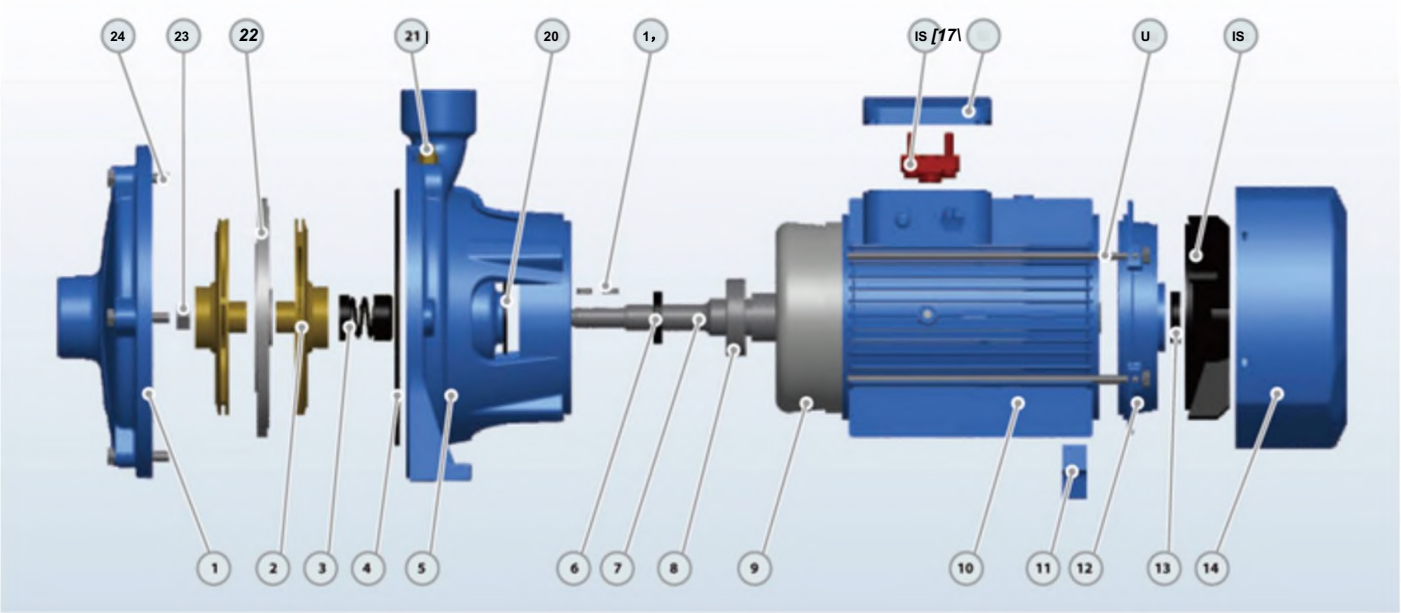

No.	Description	Material	No.	Description	Material	No.	Description	Material
1	Pump Case	Cast iron	9	Wound Stator/Rotor	Silicon Steel/Copper	17	Terminal Box	Aluminum
2	Impeller	Brass	10	Motor Case	Aluminum	18	Terminal Board	Plastic
3	Mechanical Seal	SiC/Carbon/SS304	11	Support Foot	Plastic	19	Impeller Key	Iron
4	O-ring	Rubber	12	Back Cover	Cast iron	20	Water Deflector	Rubber
5	Connection	Cast iron	13	Reinforced Seal	Rubber	21	Release Valve	Brass
6	Reinforced Seal	Rubber	14	Fan Cover	Aluminum	22	Diffuser	Cast iron
7	Shaft	SS304/45# Steel	15	Fan	Plastic	23	Impeller Nut	Galvanizated Steel
8	Bearing	Ball Bearing	16	Through Bolt	Steel	24	Connection Bolt	Steel

DIMENSIONS AND WEIGHT / *DIMENSIONES Y PESOS*

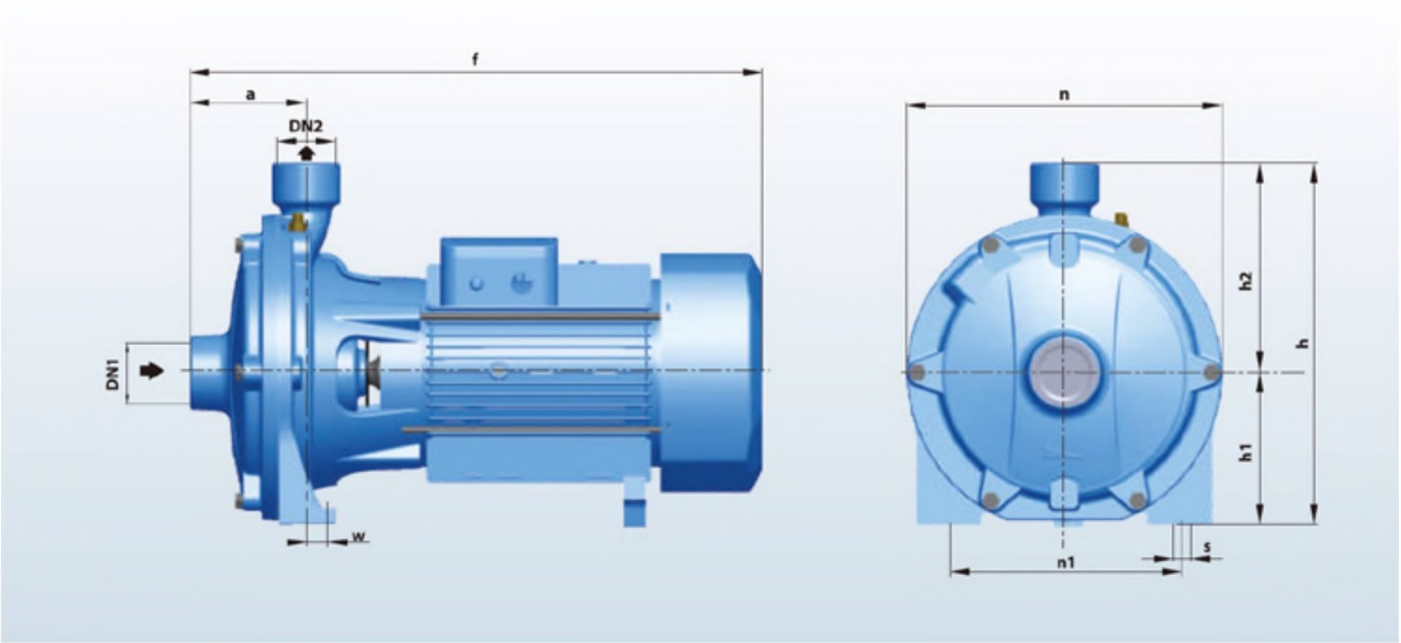

MODEL! MODELO		DIMENSIONS / *DIMENSIONES* mm											kg	
Single-phase *MonofAsicc*	Three-phase *Trif^sico*	DN1	DN2	a	f	h	hi	h2	n	n1	w	s	1*	3~
25-140/11	25-140/11	32	25	84	420	232	95	137	200	150	19	10	19.8	18.8
25-140/15	25-140/15	32	25	84	420	232	95	137	200	150	19	10	24	23
25-160/11	25160/11	32	25	84	420	270	110	160	225	172	19	11	19.8	18.8
25-160/15	25-160/15	32	25	84	420	270	110	160	225	172	19	11	242	23.2
25*160/22	25.160/22	32	25	84	420	270	110	160	225	172	19	11	25.5	24.5
32200/30	32-200/30	40	32	103	503	317	132	18S	280	205	16	14	39	38
-	32-200/40	40	32	103	503	317	132	18S	280	205	16	14	-	43
-	32-210/55	50	32	108	565	352	155	197	300	246	16	14	-	54
-	32-210/75	50	32	108	565	352	155	197	300	246	16	14	-	61
-	50-180/40-55-75	50	50	108	56S	352	155	197	300	246	16	14	-	54
-	40-210/55-75	50	40	108	565	352	155	197	300	246	16	14	-	61
-	40-200/92	50	40	119	615	355	150	205	304	215	11	14	-	89
-	40-200/110	50	40	119	615	355	150	205	304	215	11	14	-	90
-	50-200/92	50	50	119	615	355	ISO	205	304	215	11	14	-	89
-	50-200/110	SO	50	119	615	35S	ISO	20S	304	215	11	14	-	90
-	40-2SO/130	50	40	124	740	407	170	237	357	270	17	14	-	110
-	40-250/150	so	40	124	740	407	170	237	357	270	17	14	-	120
-	40-2S0/185	so	40	124	740	407	170	237	357	270	17	14	-	130
-	40-2SO/220	so	40	124	740	407	170	237	357	270	17	14	-	140
-	50-250/130	50	50	124	740	407	170	237	祝	270	17	14	-	110
-	50-250/150	50	50	124	740	407	170	237	357	270	17	14	-	120
-	50-250/185	50	50	124	740	407	170	237	357	270	17	14	-	130
-	50-250/220	50	50	124	740	407	170	237	357	270	17	14	-	140

Product Specification (60HZ)

Product Description

PEDT(P2C+PSD+Pressure Tank+Control Cabinet)

P2C

TECHNICAL DESCRIPTION

New double impeller centrifugal pump
Original design by PURITY
Both square motor & round motor available
YE3 high efficient motor, with protection IP55 class F

Pump case with anti-corrosive coating
Double impeller in brass
Shaft in stainless steel AISI 304 or galvanized iron
Suction and discharge port in G20 thread
Quality NSK bearing, wear resistance mechanical seal

APPLICATIONS

Suitable for use with clean water and liquids that are not chemically aggressive towards the materials from which the pump is made.
The high efficiency and adaptability of these pumps to even the most unusual of applications, makes them ideal for use in the domestic, civil and industrial sectors; in particular for the distribution of water in combination with pressure sets, for pressure boosting and in fire-fighting sets.

USING LIMITS

Liquid temperature between -10°C and +120°C
Ambient temperature up to +50°C
Max. working pressure 16 bar
Continuous service S1

PD

TECHNICAL DATA

Model	178	186	188	192	380	385	480	485	490N	490	495
Type	Single-cylinder,4-stroke,air-cooled				Direct Injection, Water-cooling, Four Stroke						
Intake Type	Naturally Aspirated										
Bore*Stroke(mm*mm)	78*62	86*72	88*75	92*75	80*90	85*90	80*90	85*100	90*100	90*105	95*105
Cylinder No.	1	1	1	1	3	3	4	4	4	4	4
Displacement (L)	0.296	0.418	0.456	0.499	1.357	1.532	1.8	2.27	2.54	2.67	2.977
Rated Power/ Speed (kW/r/min)	3.7/3000 4.0/3600	5.7/3000 6.3/3600	6.6/3000 7.2/3600	7.5/3000 8.2/3600	20/3000	24/3000	28/3000	26/3000	42/3000	45/3000	50/3000
Horse Power	5.0/3000 5.5/3600	7.8/3000 8.6/3600	9.0/3000 10.0/3600	10.2/3000 12.0/3600	27	32	38	49	58	61	68
Power Coverage(kW)	≤11	≤11	≤11	≤11	≤37	≤37	≤37	≤55	≤55	≤55	≤75

Model	498	4102	4105	4108	485Z	490NZ	490Z	498Z	4102Z	4105Z	4108Z
Type	Direct Injection, Water-cooling, Four Stroke										
Intake Type	Naturally Aspirated				Turbo-charging						
Bore*Stroke(mm*mm)	98*105	102*118	105*118	108*118	85*100	90*100	90*105	98*105	102*118	105*118	108*118
Cylinder No.	4	4	4	4	4	4	4	4	4	4	4
Displacement (L)	3.168	3.857	4.087	4.324	2.27	2.54	2.67	3.168	3.857	4.087	4.324
Rated Power/ Speed(kW/r/min)	54/3000	62/3000	67/3000	73/3000	44/3000	50/3000	55/3000	60/3000	73/3000	75/3000	83/3000
Horse Power	73	85	91	99	60	68	75	81	99	102	113
Power Coverage(kW)	≤75	≤100	≤100	≤100	≤55	≤55	≤55	≤75	≤100	≤100	≤100

P2C

TECHNICAL DATA / DATOS TECNICOS **60Hz n=3500 1/min**

MODEL	Power		l/min	Q=DELIVERY																			DN
	kw	hp	m³/h	0	40	50	60	70	80	90	100	110	120	140	160	180	200	250	300	350	400	450	mm
				0	2.4	3	3.6	4.2	4.8	5.4	6	6.6	7.2	8.4	9.6	10.8	12	15	18	21	24	27	
25-140/11	1.1	1.5	Head H(m)	54	47.5	44.5	41	37	33	28	22												32x25
25-140/15	1.5	2		67	60	57	54	50	45	40	32												32x25
25-160/11	1.1	1.5		47	44	42	40	38	35	33	30	27	24										32x25
25-160/15	1.5	2		58	54	53	51	49	47	45	43	40	37	30									32x25
25-160/22	2.2	3		68	64.5	63	62	60	58	56	54	51	48	41	32								32x25
32-200/30	3	4		70					63	62	60.5	59	57	55	52	49.5	46.5	36					40x32
32-200/40	4	5.5		85					77	76	75	74	72	69	66	62	58	49					40x32
32-210/55	5.5	7.5		94					91	90	89	87	85	83	79	75	70	56					50x32
32-210/75	7.5	10		112					110	109	108	107	105	102	99	94	89	74					50x32

40-210/55	5.5	7.5		94					91	90	89	87	85	83	79	75	70	56					50x40
40-210/75	7.5	10		112					110	109	108	107	105	102	99	94	89	74					50x40
50-180/40	4	5.5		62					59	58	57	56	55	55	50	48	44	36	31	23			50x50
50-180/55	5.5	7.5		72					69	68	67	66	65	65	60	58	54	46	41	33			50x50
50-180/75	7.5	10		84					81	80	79	78	76	75	72	72	66	58	53	45			50x50
40-200/92	9.2	12.5		97										91.5	91	90	88	85	80	74	68	61	50x40
40-200/110	11	15		105										100	99	98	97	93	88	83	76	69	50x40
50-200/92	9.2	12.5		97										91.5	91	90	88	85	80	74	68	61	50x50
50-200/110	11	15		105										100	99	98	97	93	88	83	76	69	50x50
40-250/130	13	17.5		120										114	113	112	110	107	103	98	91	82	50x40
40-250/150	15	20		130										124	123	122	120	117	113	108	102	92	50x40
40-250/185	18.5	25		145										139	138	137	136	131	126	121	114	107	50x40
40-250/220	22	30		160										155	153	152	151	146	141	135	130	122	50x40
50-250/130	13	17.5		120										114	113	112	110	107	103	98	91	82	50x50
50-250/150	15	20		130										124	123	122	120	117	113	108	102	92	50x50
50-250/185	18.5	25		145										139	138	137	136	131	126	121	114	107	50x50
50-250/220	22	30		160										155	153	152	151	146	141	135	130	122	50x50

PERFORMANCE CURVE / *CURVAS DEFUNCIONAMIENTO*

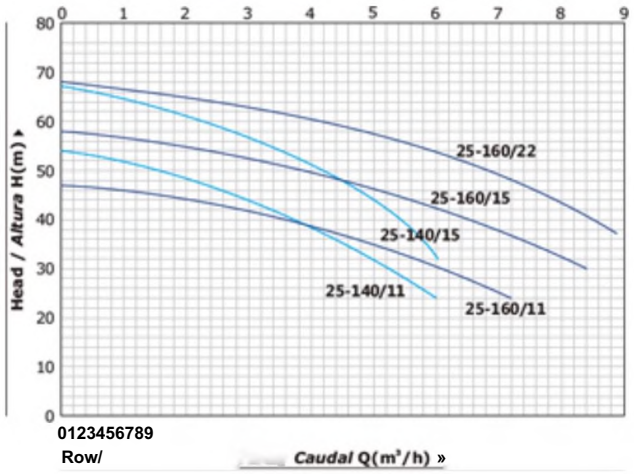

60 HZ n=35001/min

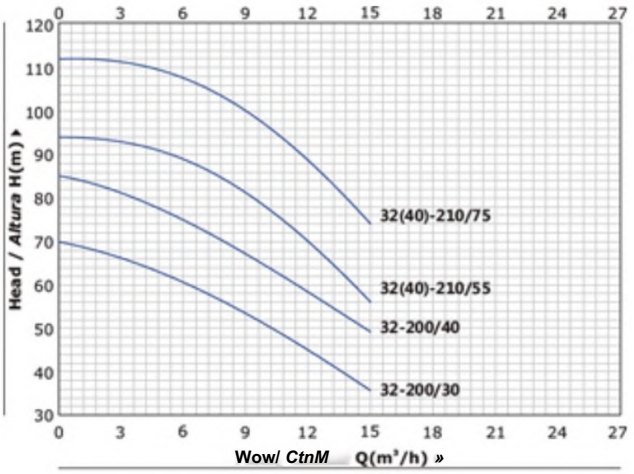

PERFORMANCE CURVE / *CURVAS DE FUNCIONAMIENTO*

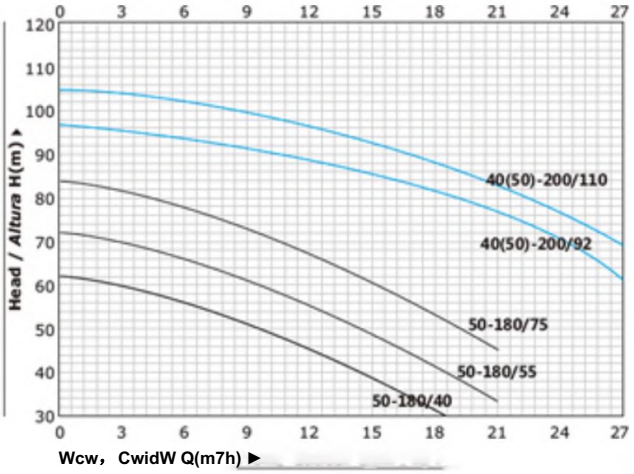

60 HZ n=3500 1/min

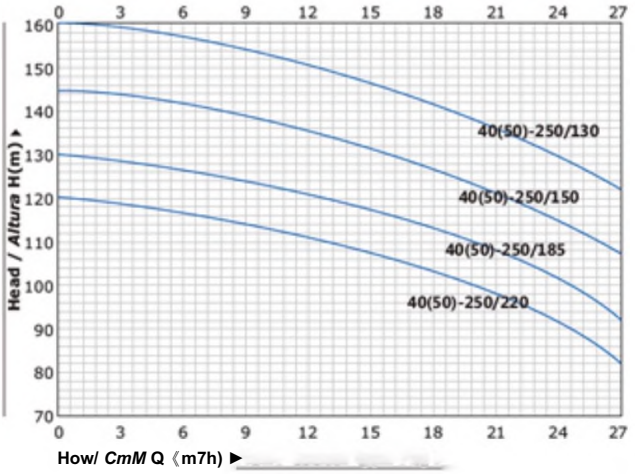

MATERIAL DESCRIPTION / *DESCRIPCI6N DE MATERIAL*

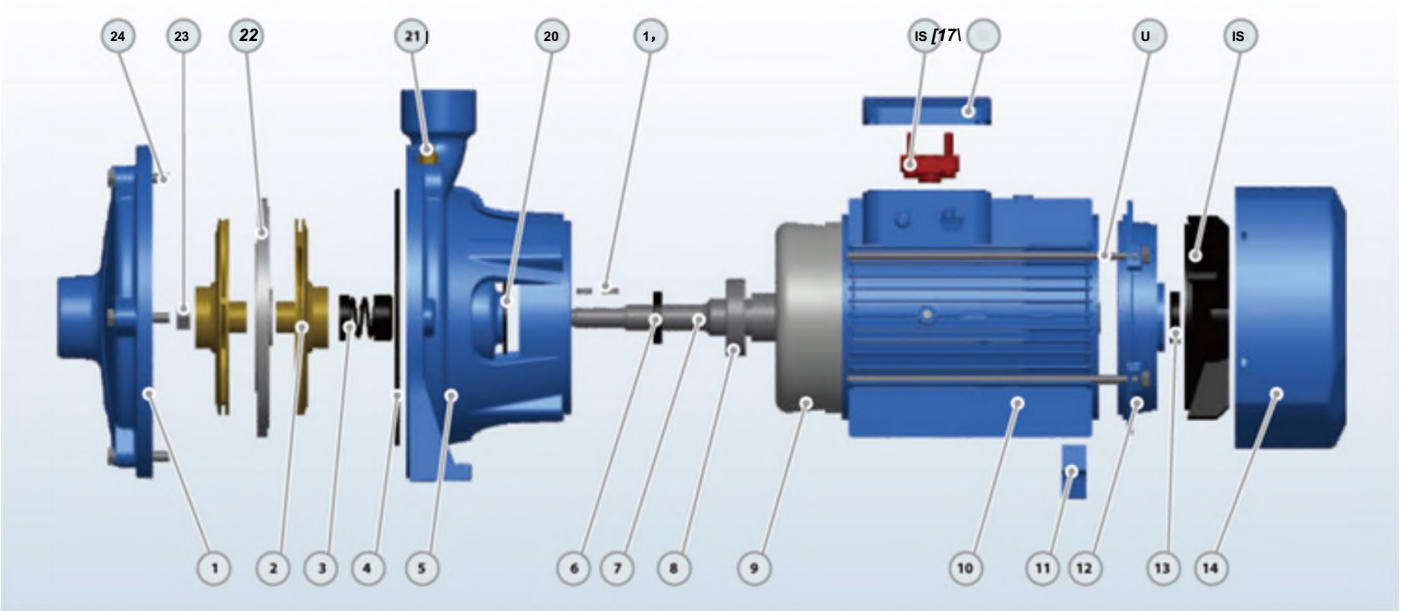

No.	Description	Material	No.	Description	Material	No.	Description	Material
1	Pump Case	Cast iron	9	Wound Stator/Rotor	Silicon Steel/Copper	17	Terminal Box	Aluminum
2	Impeller	Brass	10	Motor Case	Aluminum	18	Terminal Board	Plastic
3	Mechanical Seal	SiC/Carbon/SS304	11	Support Foot	Plastic	19	Impeller Key	Iron
4	O-ring	Rubber	12	Back Cover	Cast iron	20	Water Deflector	Rubber
5	Connection	Cast iron	13	Reinforced Seal	Rubber	21	Release Valve	Brass
6	Reinforced Seal	Rubber	14	Fan Cover	Aluminum	22	Diffuser	Cast iron
7	Shaft	SS304/45# Steel	15	Fan	Plastic	23	Impeller Nut	Galvanizated Steel
8	Bearing	Ball Bearing	16	Through Bolt	Steel	24	Connection Bolt	Steel

DIMENSIONS AND WEIGHT / *DIMENSIONES Y PESOS*

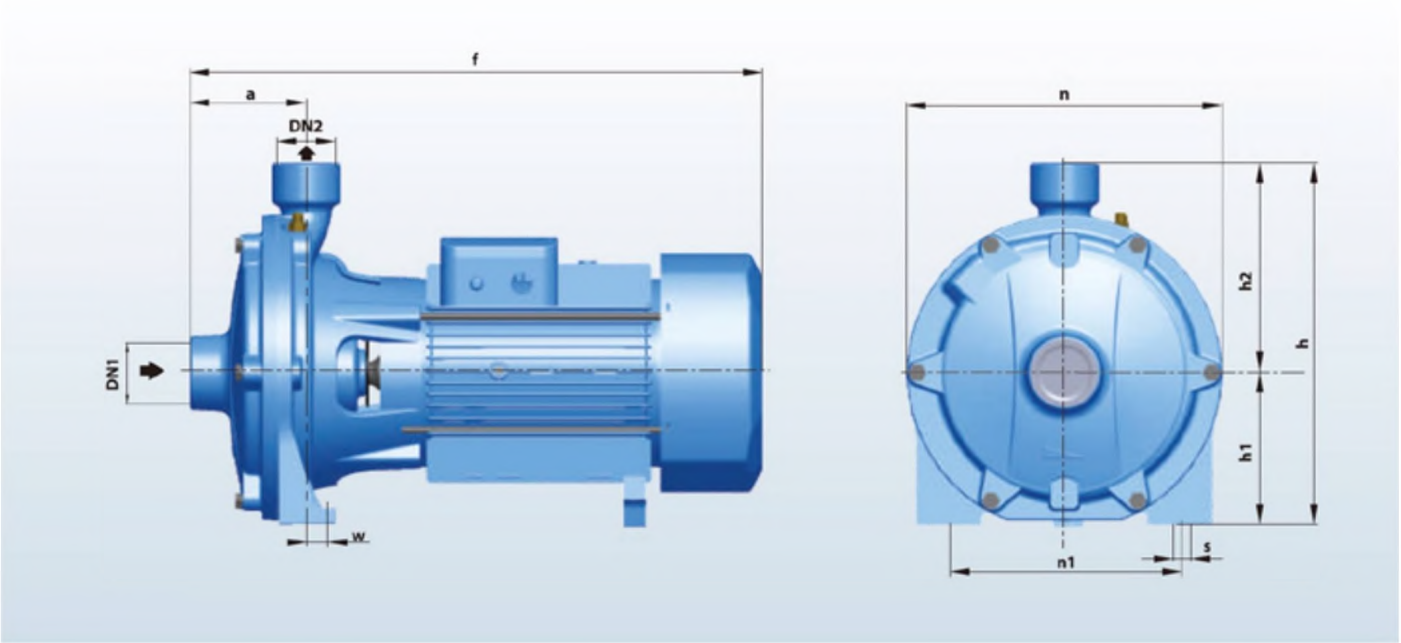

MODEL! MODELO		DIMENSIONS / *DIMENSIONES* mm											kg	
Single-phase *MonofAsicc*	Three-phase *Trif^sico*	DN1	DN2	a	f	h	hi	h2	n	n1	w	s	1*	3~
25-140/11	25-140/11	32	25	84	420	232	95	137	200	150	19	10	19.8	18.8
25-140/15	25-140/15	32	25	84	420	232	95	137	200	150	19	10	24	23
25-160/11	25160/11	32	25	84	420	270	110	160	225	172	19	11	19.8	18.8
25-160/15	25-160/15	32	25	84	420	270	110	160	225	172	19	11	242	23.2
25*160/22	25.160/22	32	25	84	420	270	110	160	225	172	19	11	25.5	24.5
32200/30	32-200/30	40	32	103	503	317	132	18S	280	205	16	14	39	38
-	32-200/40	40	32	103	503	317	132	18S	280	205	16	14	-	43
-	32-210/55	50	32	108	565	352	155	197	300	246	16	14	-	54
-	32-210/75	50	32	108	565	352	155	197	300	246	16	14	-	61
-	50-180/40-55-75	50	50	108	56S	352	155	197	300	246	16	14	-	54
-	40-210/55-75	50	40	108	565	352	155	197	300	246	16	14	-	61
-	40-200/92	50	40	119	615	355	150	205	304	215	11	14	-	89
-	40-200/110	50	40	119	615	355	150	205	304	215	11	14	-	90
-	50-200/92	50	50	119	615	355	ISO	205	304	215	11	14	-	89
-	50-200/110	SO	50	119	615	35S	ISO	20S	304	215	11	14	-	90
-	40-2SO/130	50	40	124	740	407	170	237	357	270	17	14	-	110
-	40-250/150	so	40	124	740	407	170	237	357	270	17	14	-	120
-	40-2S0/185	so	40	124	740	407	170	237	357	270	17	14	-	130
-	40-2SO/220	so	40	124	740	407	170	237	357	270	17	14	-	140
-	50-250/130	50	50	124	740	407	170	237	祝	270	17	14	-	110
-	50-250/150	50	50	124	740	407	170	237	357	270	17	14	-	120
-	50-250/185	50	50	124	740	407	170	237	357	270	17	14	-	130
-	50-250/220	50	50	124	740	407	170	237	357	270	17	14	-	140

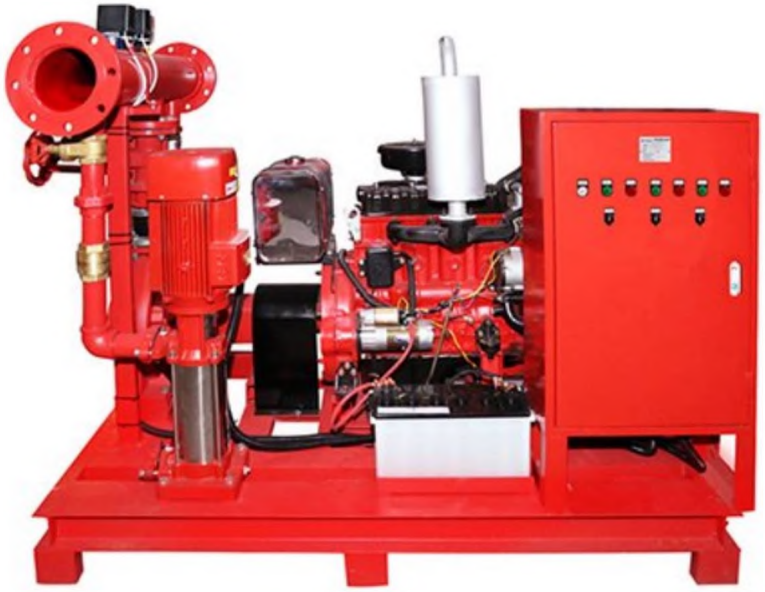

Fire Pump System PDJ

Fire Fighting Diesel Jockey Pump with Control Panel (PDJ)

TECHNICAL DESCRIPTION

■New EN733 standard centrifugal pump

■Original design by PURITY (patented)

■More Environmentally Friendly

■Low Fuel Consumption

■Strong Power

■Easy To Assemble

Product Description

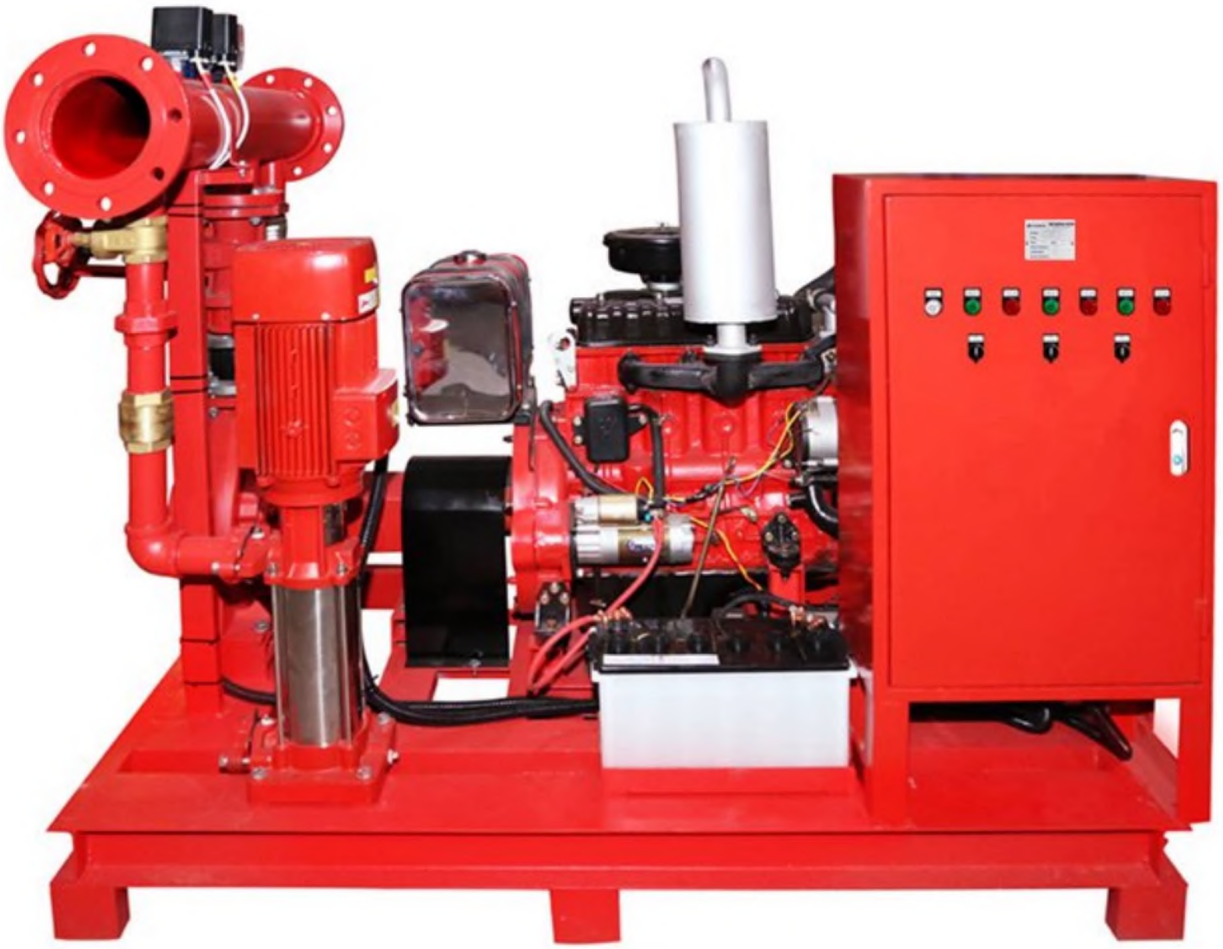

PV
TECHNICAL DESCRIPTION

TECHNICAL DESCRIPTION

New vertical multistage centrifugal pump
Original design by PURITY
Suction and discharge port in cast iron G20 thread
Quality NSK bearing, wear resistance mechanical seal

APPLICATIONS

Suitable for use with clean water and liquids that are not chemically aggressive towards the materials from which the pump is made.
The high efficiency and adaptability of these pumps to even the most unusual of applications, makes them ideal for use in the domestic, civil and industrial sectors; in particular for the distribution of water in combination with pressure sets and for pressure boosting.

USING LIMITS

Liquid temperature between -10°C and +120°C
Ambient temperature up to +50°C
Max. working pressure 25 bar
Continuous service SI

MATERIAL DESCRIPTION

MATERIAL DESCRIPTION / ***DESCRIPCI6N DE MATERIAL***

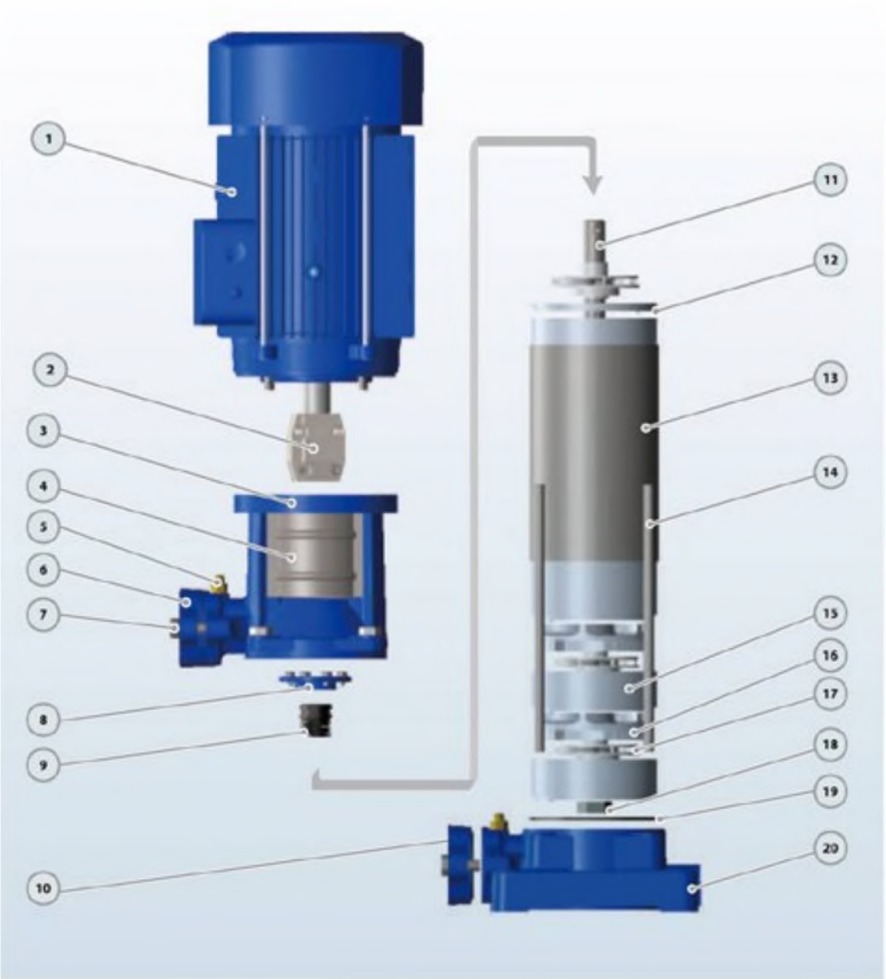

No.	Description *Descripcion*	Material *Material*
1	Motor *Motor*	IP55 Class F *IP5S Close F*
2	Coupfng Un/On	Iron *Hierro*
3	Discharge Body *Cuerpo tmpuisibn*	Cast iron *Fundicion*
4	Cover *Taps*	SS304 *mox3O4*
5	Release Vahre *Tap6n Ceb&do*	Brass *Bronco*
6	Discharge *Impuisfdn*	Cast iron *Fundteion*
7	Bolt *P&rno*	Steel *Ac^ro*
8	Seal Cover *Tapa Ciemo*	Cast iron *FundM^n*
9	Mechanical Soai *Cierre MecAnicc*	SiGCarbon/SS304 SrC-Gra«to-/nojr3(M
10	Suction *Aspiracidn*	Cast iron *Fundici^n*
11	Pump Shaft 狄	SS304/45# ken *Inox 304/45# hierm*
12	Diffuser Top Cover *Tope 7d/>a Difusor*	Tecnncpolmer *Tecnopolimero*
13	Punp Ccver *Tapa Bemba*	SS304 *Inox 304*
14	Through Boll *Porno*	Steel *Aceio*
15	O fluser Cover *Taps Difusof*	Technopoimef wth SS3O4 mg *locnopobrKm con Inox antlo*
16	Dffuser *Difusor*	T0Chnopoimefw<hSS3O4rtr) g *TecnopotinierQ con Inox onifo*
17	Impe4er *Impulsor*	Techncpolmer *TecnopoHmero*
18	Impel er Nut *Tuerca de fmpuisor*	Galvanizated Sleel *Acoro Gclvanizado*
19	*O-finQ* *Junta TMca*	Rubber *Caucho*
20	Sucbon Body *Cuerpo Aspiración*	Cast iron *Fundtcidn*

DIMENSION AND WEIGHT

PERFORMANCE CURVE / ***CURVAS DEFUNCIONAMIENTO***

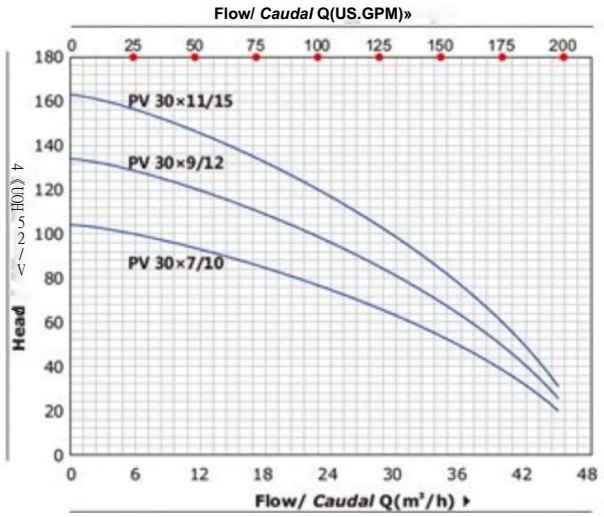

DIMENSIONS AND WEIGHT / ***DIMENSIONS Y PESOS***

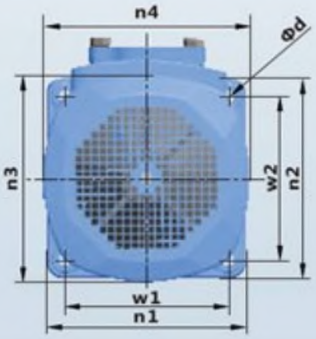

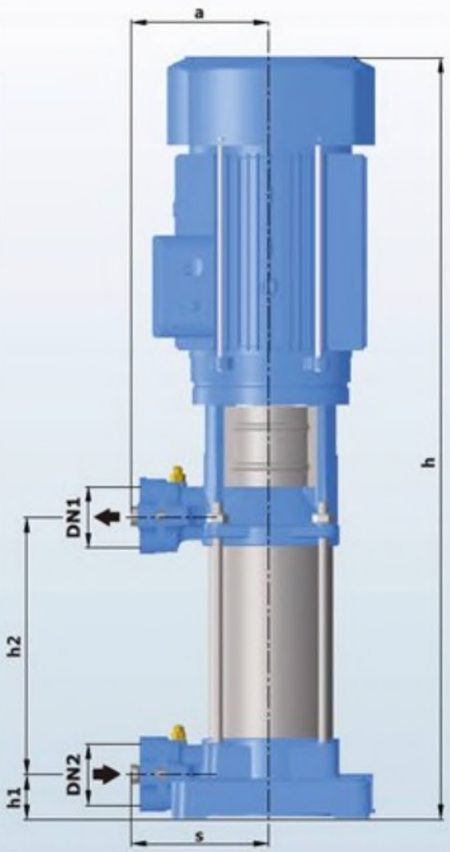

MODEL *MODELO*	DIMENSIONS / *DIMENSIONES* mm															kg	
	DN1	DN2	N	a	s	h	hi	h2	wl	w2	n1	n2	n3	n4	d	1-	3-
PV4x7/1.5	25/32	25/32	7	141	141	720	45.5	261.5	165	165	202	202	175	175	12	28.0	27.0
PV 4x9/2	25/32	25/32	9	141	141	790	45.5	331.5	16S	165	202	202	175	175	12	33.0	32.0
PV 4x13/3	25/32	25/32	13	141	141	930	45.5	471.5	165	165	202	202	175	175	12	38.0	37.0
PV 4x16/4	25/32	25/32	16	141	141	1082	45.5	576.5	16S	165	202	202	195	19S	12	48.0	47.0
PV6x5/1.5	25/32	25/32	S	141	141	650	45.5	191.5	165	165	202	202	175	175	12	26.0	2S.0
PV 6x8/2	25/32	25/32	8	141	141	755	45.5	296.5	16S	165	202	202	175	175	12	31.0	30.0
PV 6x11/3	25/32	25/32	11	141	141	860	45.5	401.5	165	165	202	202	175	175	12	36.0	35.0
PV 6x15/4	25/32	25/32	IS	141	141	1047	45.5	S41.5	16S	165	202	202	195	195	12	46.0	4S.0
PV8x4/1.5	40/50	40/50	4	141	141	615	45.5	156.5	165	165	202	202	175	175	12	26.0	25.0
PV 8x7/2	40/50	40/50	7	141	141	720	4S· S	261.5	16S	16S	202	202	175	175	12	31.0	30.0
PV 8x9/3	40/50	40/50	9	141	141	790	45.5	331.S	16S	16S	202	202	175	175	12	36.0	3S.0
PV 8x12/4	40/50	40/50	12	141	141	942	45.5	436.5	16S	16S	202	202	195	195	12	46.0	4S.0
PV 8x16/5.5	40/50	40/50	16	141	141	1082	45.5	576.5	165	165	202	202	*195*	195	12	-	50.0
PV 12x3/L5	40/50	40/50	3	141	141	580	45.5	121.5	165	16S	202	202	175	175	12	25.0	24.0
PV 12x5/2	40/50	40/50	5	141	141	650	45.5	191.5	165	16S	202	202	175	175	12	30.0	29.0
PV 12x7/3	40/50	40/50	7	141	141	720	45.5	261.5	165	16S	202	202	175	175	12	35.0	34.0
PV 12x9/4	40/50	40/50	9	141	141	837	45.5	331.5	165	165	202	202	195	195	12	45.0	44.0
PV 12x12/5.5	40/50	40/50	12	141	141	942	45.5	4J6.5	165	16S	202	202	195	195	12	-	50.0
PV 12x17/7.5	40/50	40/50	17	141	141	1167	45.5	611.5	16S	165	202	202	204	204	12	-	60.0
PV 30x7/10	50/65	50/65	7	170	170	1046	62	416	187	187	230	230	260	260	12	-	86.0
PV 30x9/12	50/65	50/65	9	170	170	1153	62	523	187	187	230	230	260	260	12	-	92.0
PV 30xll/lS	50/65	50/65	11	170	170	1260	62	630	187	187	230	230	260	260	12	-	100

PD

TECHNICAL DESCRIPTION

More Environmentally Friendly
Meeting China III Emission Standard
Low Fuel Consumption
Strong Power
Easy To Assemble

APPLICATIONS

Suitable for use with clean water and liquids that are not chemically aggressive towards the materials from which the pump is made.
The diesel engine pumps are recommended for use in water supply, cleaning sets, pressure boosting, firefighting sets, irrigation, industrial applications, water circulation in climatisation sets, agricultural.

USING LIMITS

Liquid temperature between -10°C and +120°C

Ambient temperature up to +50°C
Max. working pressure 16 bar
Continuous service SI

TECHNICAL DATA

TECHNICAL DATA / ***DATOS TtCNICOS***

Model	**178**	**186**	**188**	**192**	**380**	**385**	**480**	**485**	**490N**	**490**	**495**
Type	Si ngle-cylindef；4-stroke.air-cooled				Direct Injection, Water-cooling, Four Stroke						
Intake Type	Naturally Aspirated										
Bore*Stroke(mm*mm)	78*62	86*72	88*75	92*75	80*90	85*90	80*90	85*100	90*100	90*105	95*105
Cylinder No.	1	1	1	1	3	3	4	4	4	4	4
Displacement (L)	0.296	0.418	0.456	0.499	1.357	1.532	1.8	2.27	2.54	2.67	2.977
Rated Power/ Speed (kW/r/min)	3.7/3000 4.0/3600	5.7/3000 6.3/3600	6.6/3000 7.2/3600	7.5/3000 8.2/3600	20/3000	24/3000	28/3000	36/3000	42/3000	45/3000	50/3000
Horse Power	5.0/3000 5.5/3600	7.8/3000 8.6/3600	9.0/3000 10.0/3600	10.2/30C0 12.0/3600	27	32	38	49	58	61	68
Power Coverage(kW)	≤11	≤11	名11	或n	£37	名37	£37	彡55	^55	S55	名75

Model	**498**	**4102**	**4105**	**4108**	**485Z**	**490NZ**	**490Z**	**498Z**	**4102Z**	**4105Z**	**4108Z**
Type	Direct Injection. Water-cooling, Four Stroke										
Intake Type	Naturally Aspirated				7urtx>-charging						
Bore*Stroke(mm*mm)	98*105	102*118	105*118	108*118	85*100	90*100	90*105	98*105	102*118	105*118	108U18
Cylinder No.	4	4	4	4	4	4	4	4	4	4	4
Displacement (L)	3.168	3.857	4.087	4.324	2.27	2.54	2.67	3.168	3.857	4.087	4.324
Rated Power/ Speed (kW/r/min)	54/3000	62/3000	67/3000	73/3000	44/3000	50/3000	55/3000	60/3000	73/3000	75/3000	83/3000
Horse Power	73	85	91	99	60	68	75	81	99	102	113
Power Coverage(kW)	^75	£100	^100	£100	^55	iS5	^55	^75	^100	^100	^100

Product Specification (60HZ)

Product Description

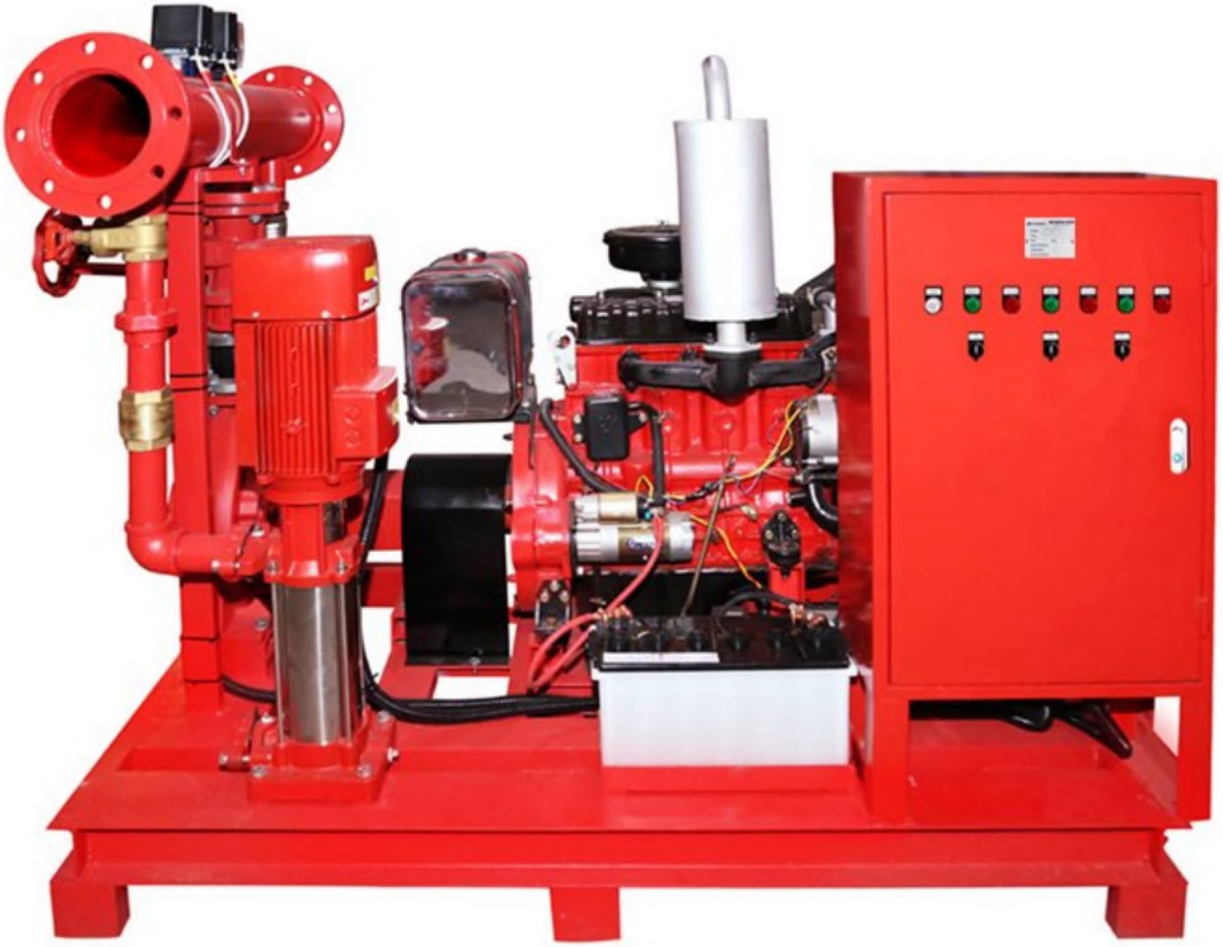

PV
TECHNICAL DESCRIPTION

TECHNICAL DESCRIPTION

New vertical multistage centrifugal pump
Original design by PURITY
Suction and discharge port in cast iron G20 thread
Quality NSK bearing, wear resistance mechanical seal

APPLICATIONS

Suitable for use with clean water and liquids that are not chemically aggressive towards the materials from which the pump is made.
The high efficiency and adaptability of these pumps to even the most unusual of applications, makes them ideal for use in the domestic, civil and industrial sectors; in particular for the distribution of water in combination with pressure sets and for pressure boosting.

USING LIMITS

Liquid temperature between -10°C and +120°C
Ambient temperature up to +50°C
Max. working pressure 25 bar

Continuous service SI

MATERIAL DESCRIPTION

MATERIAL DESCRIPTION / ***DESCRIPCI6N DE MATERIAL***

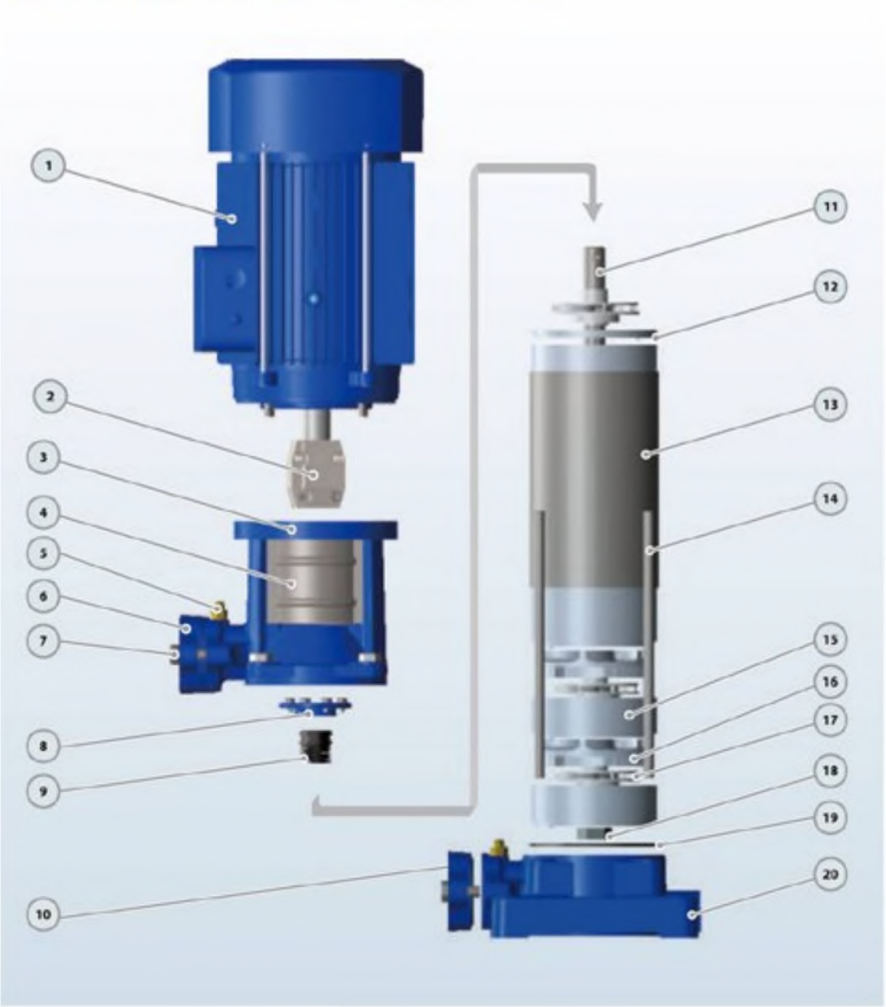

No.	Description *Descripcion*	Material *Material*
1	Motor *Motor*	IP55 Class F *IP5S Close F*
2	Coupfng Un/On	Iron *Hierro*
3	Discharge Body *Cuerpo tmpuisibfi*	Cast iron *Fundicion*
4	Cover *Tapa*	SS304 *ox 304*
S	Release Vahre *Tap6n C&b&do*	Brass *Bronco*
b	Discharge *Impuisidn*	Cast iron *Fundtcion*
7	Bolt *P&rno*	Sted *Ac^ro*
8	Seal Cover Tapa Qerre	Cast iron *FundM^n*
9	Mechanical Soai *Cierre Mec^nico*	SiGCarbon/SS304 *SiC~Grafik>-Inox304*
10	Suction *Aspiracidn*	Cast iron *Fundici6r*
11	Pump Shaft *Eje*	SS304/45# Iren *Inox 304/45H hierro*
12	Diffuser Top Cover *Tope Tops Difusor*	Tecnncpolmer *Tecnopdimero*
13	Punp Ccver *Tapa Bemba*	SS304 *Inox 304*
14	Through Bolt *Porno*	Steel *Aceio*
15	Dffuser Cover *Tapa Dtfusof*	Technopofanefwth SS3O4 mg *iGcmpobnsm con Inox anHo*
16	Dffuser *Difusor*	T0Chnopoimefw<hSS3O4rtr) g *Tecnopoltmero con Inox onifo*
17	impeler *Impulsor*	Techncpolmer *TecnopoHmero*
18	Impel er Nut *Tuefca de fmputsor*	Galvanizated Sleel *Aeon Gclvanizodo*
19	O-nn (j *Junta TMca*	Rubber *Caucho*
20	Sucbon Body *Cuerpo Asptnd&i*	Cast iron *Fundtcidn*

DIMENSION AND WEIGHT

PERFORMANCE CURVE / ***CURVAS DEFUNCIONAMIENTO***

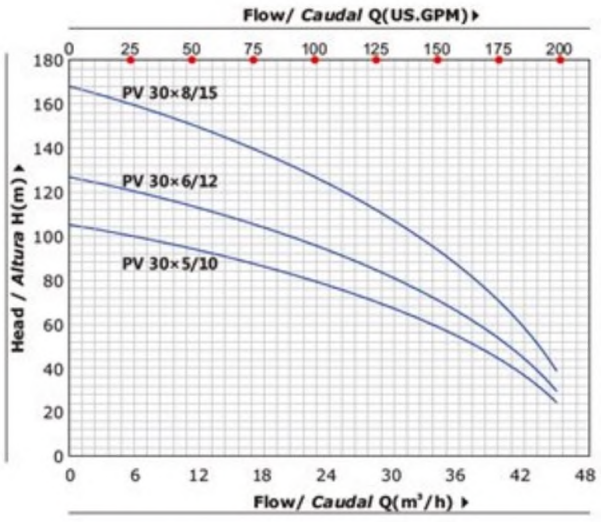

DIMENSIONS AND WEIGHT / ***DIMENSIONES YPESOS***

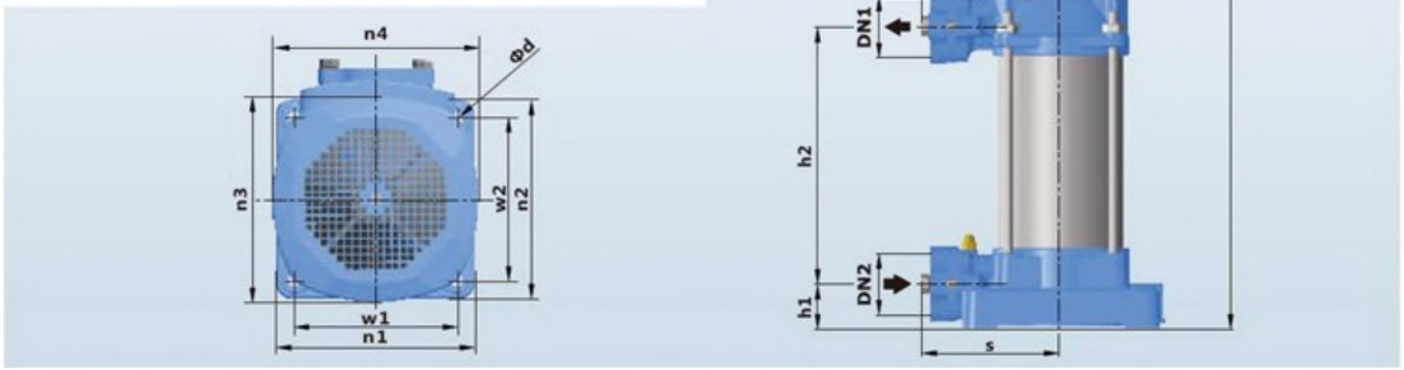

MODEL / MODELO		DIMENSIONS / *DIMENSIONES mm*															kg	
Single-phase Monof虹 ico	**Trree-phase Trif&sico**	DN1	DN2	N	a	s	h	hi	h2	w1	w2	n1	n2	n3	n4	d	1~	3~
PV 4x4/l.S	**PV4x4/1.5**	25/32	25/32	4	141	141	6155	455	1565	165	I 165	202	202	175	175	12	27.0	26 0
PV 4x6/2	**PV 4x6/2**	25/32	25/32	6	141	141	6855	45.5	226 5	165	165	202	202	175	175	12	32.0	31.0
PV 4x8/3	**PV 4x8/3**	25/32	25/32	8	141	141	7555	45.5	296 5	165	165	202	202	175	175	12	37.0	36.0
PV 4x10/4	**PV 4x10/4**	25/32	25/32	10	141	141	872S	4SS	3665	16S	16S	202	202	195	195	12	47.0	46.0
-	**PV 4x13/5.5**	25/32	25/32	13	141	141	9775	455	4715	16S	16S	202	202	195	195	12	•	510
-	**PV 4x16/7.5**	25/32	25/32	16	141	141	11325	45.5	5765	165	165	202	202	204	204	12	•	61.0
PV6« 3/1.5	**PV 6x3/1.5**	25/32	25/32	3	141	141	S805	45.5	121.5	165	165	202	202	175	175	12	26.0	25.0
PV 6x5/2	**PV 6xS/2**	25/32	25/32	5	141	141	6505	45.5	191.5	165	165	202	202	175	175	12	31.0	30.0
PV 6*7/3	**PV 6x7/3**	25/32	25/32	7	141	141	720S	45.S	2615	165	16S	202	202	175	175	12	36.0	35.0
PV 6x9/4	**PV 6x9/4**	25/32	25/32	9	141	141	8375	45.5	3315	165	165	202	*202*	195	195	12	46.0	45.0
-	**PV 6x12/5.5**	25/32	25/32	12	141	141	9425	45.5	436.5	165	165	202	202	195	195	12	•	50.0
•	**PV 6x16/7.5**	25/32	25/32	16	141	141	11325	45.5	5765	165	165	202	202	204	204	12	-	60.0
PV 8*4/2	**PV 8x4/2**	mo	40/50	4	141	141	6155	45.5	156.S	165	165	202	202	175	175	12	30.0	29.0
PV 8x6/3	**PV 8x6/3**	40/50	40/50	6	141	141	6855	455	2265	165	165	202	202	175	175	12	35.0	34.0
PV 8x8/4	**PV 8x8/4**	40/50	40/50	8	141	141	8025	45.5	2965	165	165	202	202	195	195	12	4S.0	44.0
■	**PV 8x10/5.5**	40/50	40/50	10	141	141	8725	45.5	3665	165	165	202	202	195	195	12	-	49.0
•	**PV 8x13/7.5**	40/50	40/50	13	141	141	1027.5	45.5	471.5	165	165	202	202	204	204	12	-	59.0
•	**PV 8x17/10**	40/50	40/50	17	141	141	1167.5	45 5	6115	165	165	202	202	204	204	12	-	640
PV 12x3/2	**PV 12x3/2**	40/50	40/50	3	141	141	5805	45.5	121,5	165	165	202	202	175	175	12	28.0	27.0
PV 12x4/3	**PV 12x4/3**	40/50	40/50	4	141	141	615.5	45.5	1565	165	165	202	202	175	175	12	33.0	32.0
PV 12xS/4	**PV 12x5/4**	40/S0	40/50	5	141	141	6975	45.S	191.5	165	165	202	202	195	195	12	41.0	40.0
-	**PV 12x7/5.5**	40/50	40/50	7	141	141	7675	4S.S	2615	165	165	202	202	195	195	12	•	45.0
-	**PV 12x9/7.5**	40/S0	40/50	9	141	141	8875	455	3315	165	165	202	202	204	204	12	-	55.0
-	**PV 12x11/10**	40/50	40/50	11	141	141	9575	45.5	401.5	87	165	202	202	204	204	12	•	62.0
-	**PV 12x15/15**	40/50	40/50	15	141	141	11275	45.5	5415	87	16! 5	202	202	2 6 0	2 6 0	12	-	80.0
-	**PV 30x5/10**	50/65	50/65	5	170	170	939	62	309	87	87	230	230	2 6 0	2 6 0	12	-	84.0
-	**PV 30x6/12**	50/65	50/65	6	170	170	993	62	3625	87	87	230	230	260	260	12	-	900
-	**PV 30x8/15**	50/65	50/65	8	170	170	1100	62	4695	87	18 7	230	230	260	260	12	•	97.0

PD

TECHNICAL DESCRIPTION

More Environmentally Friendly
Meeting China III Emission Standard
Low Fuel Consumption
Strong Power
Easy To Assemble

APPLICATIONS

Suitable for use with clean water and liquids that are not chemically aggressive towards the materials from which the pump is made.
The diesel engine pumps are recommended for use in water supply, cleaning sets, pressure boosting, firefighting sets, irrigation, industrial applications, water circulation in climatisation sets, agricultural.

USING LIMITS

Liquid temperature between -10°C and +120°C

Ambient temperature up to +50°C
Max. working pressure 16 bar
Continuous service SI

TECHNICAL DATA

TECHNICAL DATA / ***DATOS TtCNICOS***

Model	**178**	**186**	**188**	**192**	**380**	**385**	**480**	**485**	**490N**	**490**	**495**
Type	Si ngle-cylindef；4-stroke.air-cooled				Direct Injection, Water-cooling, Four Stroke						
Intake Type	Naturally Aspirated										
Bore*Stroke(mm*mm)	78*62	86*72	88*75	92*75	80*90	85*90	80*90	85*100	90*100	90*105	95*105
Cylinder No.	1	1	1	1	3	3	4	4	4	4	4
Displacement (L)	0.296	0.418	0.456	0.499	1.357	1.532	1.8	2.27	2.54	2.67	2.977
Rated Power/ Speed (kW/r/min)	3.7/3000 4.0/3600	5.7/3000 6.3/3600	6.6/3000 7.2/3600	7.5/3000 8.2/3600	20/3000	24/3000	28/3000	36/3000	42/3000	45/3000	50/3000
Horse Power	5.0/3000 5.5/3600	7.8/3000 8.6/3600	9.0/3000 10.0/3600	10.2/30C0 12.0/3600	27	32	38	49	58	61	68
Power Coverage(kW)	≤11	≤11	名11	或n	£37	名37	£37	彡55	^55	S55	名75

Model	**498**	**4102**	**4105**	**4108**	**485Z**	**490NZ**	**490Z**	**498Z**	**4102Z**	**4105Z**	**4108Z**
Type	Direct Injection. Water-cooling, Four Stroke										
Intake Type	Naturally Aspirated				7urtx>-charging						
Bore*Stroke(mm*mm)	98*105	102*118	105*118	108*118	85*100	90*100	90*105	98*105	102*118	105*118	108U18
Cylinder No.	4	4	4	4	4	4	4	4	4	4	4
Displacement (L)	3.168	3.857	4.087	4.324	2.27	2.54	2.67	3.168	3.857	4.087	4.324
Rated Power/ Speed (kW/r/min)	54/3000	62/3000	67/3000	73/3000	44/3000	50/3000	55/3000	60/3000	73/3000	75/3000	83/3000
Horse Power	73	85	91	99	60	68	75	81	99	102	113
Power Coverage(kW)	^75	£100	^100	£100	^55	iS5	^55	^75	^100	^100	^100

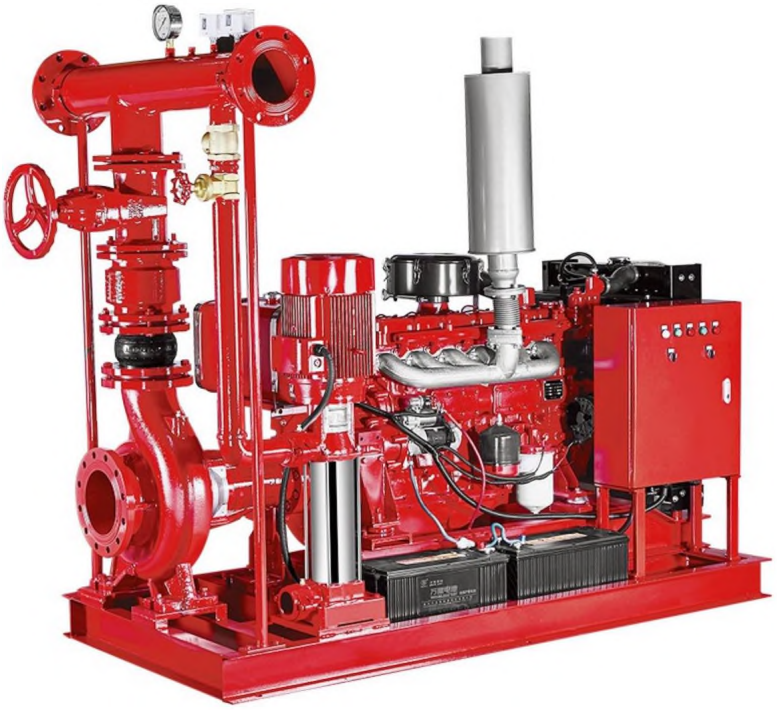

Fire Pump System PDJ

PDJ Fire Pump Set consists of End Suction Diesel Pump, and Vertical Jockey Pump

Advantages
Switch Automatically between the two pumps
Both Manual and Automatic operation is available
Can work when the power is off
Easy Installation
Customized size and pump group
YE3 high efficient motor with protection IP55 class F
High performance and low power consumption
Pump case with Anti-corrosive coating
With quality NSK bearings, wear resistance mechanical seal
Circuit available up on request
Different Mounting Styles
Low Maintenance Cost and available spare parts
Electronic battery charger

Product Specification (50HZ)


PRCSSDRC CAUGK
MtKSSUU SWITCH
DISCHARGING PIPE
VERTICAL MULTISTAGE JOCKEY PUMP
GATE VALVE
CONTROL PANNEL
ELECTRIC PUMP

Fire Pump System
Diesel Jockey Pump

MU

PRODUCT INFORMATION

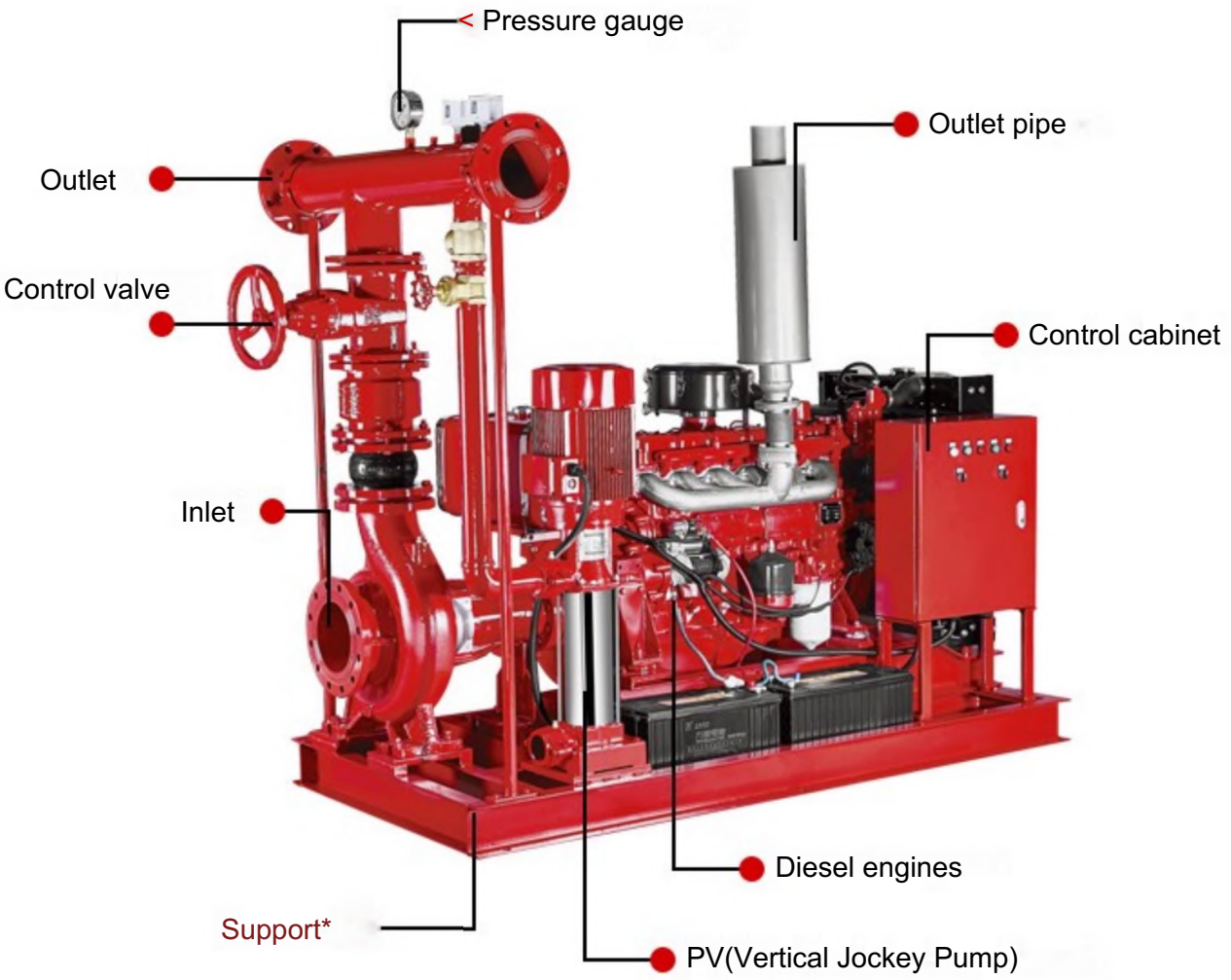

Model Description

PDJ 50 / 6 5.5 - 2

- 2 — Power Jockey(hp)
- 5.5 — Power Diesel(hp)
- 6 — Highest lift(bar)
- 50 — Maximum flow(gpm)
- PDJ — Standard Centrifugal Pumps

Model	Perform		Power Diesel	Power Jockey
	Q	H		
	GPM	bar	HP	HP
50/6-5.5-2	50	6	5.5	2
80/7-8.6-3	80	7	8.6	3
100/7-8.6-3	100	7	8.6	3
120/7-10-3	120	7	10	3
150/7-10-3	150	7	10	3
200/7-27-3	200	7	27	3
250/7-27-4	250	7	27	4
300/7-32-4	300	7	32	4
350/7-32-4	350	7	32	4
400/7-38-5.5	400	7	38	5.5
500/8-58-5.5	500	8	58	5.5
750/8-75-7.5	750	8	75	7.5
1000/8-99-10	1000	8	99	10
1250/8-130-10	1250	8	130	10
500/10-61-75	500	10	61	7.5
750/10-99-10	750	10	99	10
1000/10-113-12	1000	10	113	12
1250/10-170-15	1250	10	170	15
500/13-99-12	500	13	99	12
750/13-113-12	750	13	113	12
1000/13-130-15	1000	13	130	15
1250/13-170-15	1250	13	170	15
1500/13-170-15	1500	13	170	15

Product Specification (60HZ)


PRCSSDRC CAUGK
MtKSSUU SWITCH
DISCHARGING PIPE
VERTICAL MULTISTAGE JOCKEY PUMP
GATE VALVE
CONTROL PANNEL
ELECTRIC PUMP

Fire Pump System
Diesel Jockey Pump

MU

PRODUCT INFORMATION

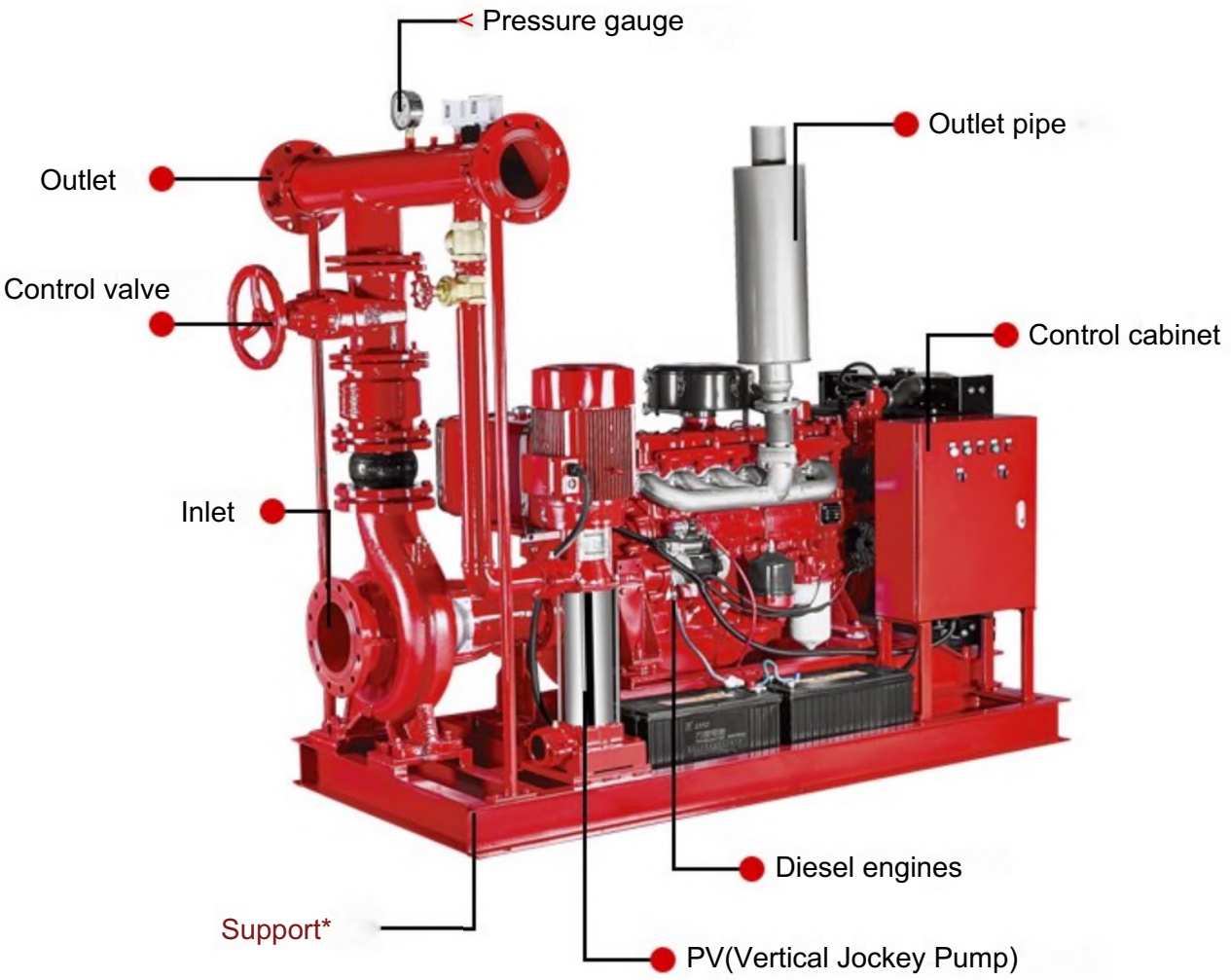

Model Description

PDJ 50 / 6 5.5 - 2

- 2 — Power Jockey(hp)
- 5.5 — Power Diesel(hp)
- 6 — Highest lift(bar)
- 50 — Maximum flow(gpm)
- PDJ — Standard Centrifugal Pumps

Model	Perform		Power Diesel	Power Jockey
	Q	H		
	GPM	bar	HP	HP
50/6-5.5-2	50	6	5.5	2
80/7-8.6-3	80	7	8.6	3
100/7-8.6-3	100	7	8.6	3
120/7-10-3	120	7	10	3
150/7-10-3	150	7	10	3
200/7-27-3	200	7	27	3
250/7-27-4	250	7	27	4
300/7-32-4	300	7	32	4
350/7-32-4	350	7	32	4
400/7-38-5.5	400	7	38	5.5
500/8-58-5.5	500	8	58	5.5
750/8-75-7.5	750	8	75	7.5
1000/8-99-10	1000	8	99	10
1250/8-130-10	1250	8	130	10
500/10-61-75	500	10	61	7.5
750/10-99-10	750	10	99	10
1000/10-113-12	1000	10	113	12
1250/10-170-15	1250	10	170	15
500/13-99-12	500	13	99	12
750/13-113-12	750	13	113	12
1000/13-130-15	1000	13	130	15
1250/13-170-15	1250	13	170	15
1500/13-170-15	1500	13	170	15

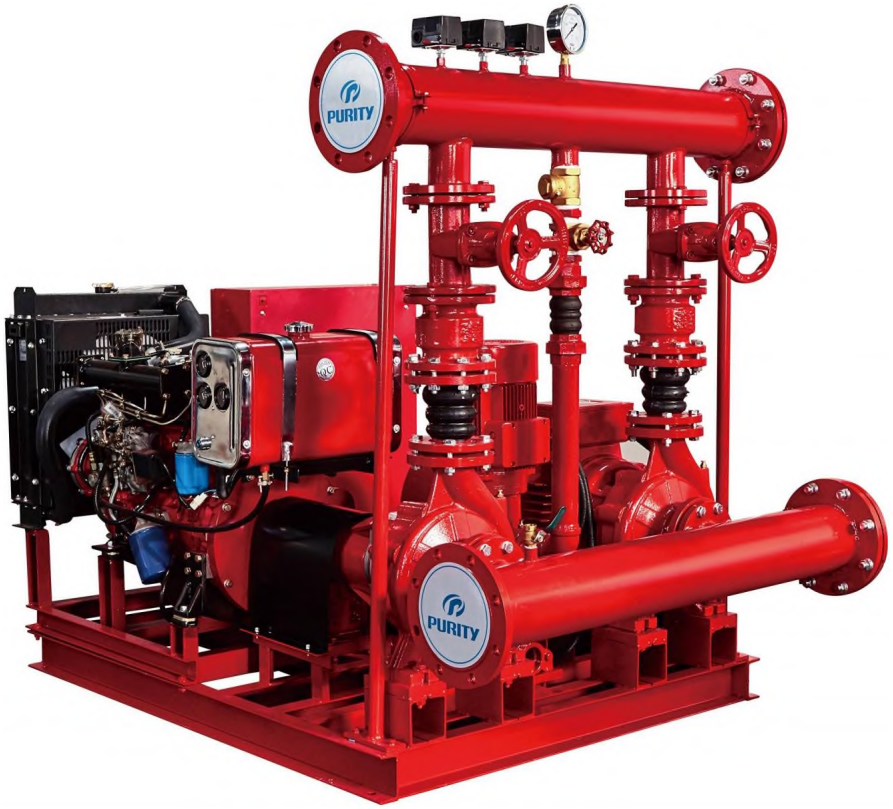

Fire Pump System PEDJ

Fire Pump Set with Electric Diesel and Jockey Pump

TECHNICAL DESCRIPTION

* Switch **Automatically** among the three pumps
* Both **Manual and Automatic** operation is available
* Can work when the power is off
* **Customized** size and pump group
* YE3 **high efficient motor** with protection **IP55 class F**
* High performance and low power consumption
* Pump case with **Anti-corrosive** coating
* With **NSK** bearings, wear resistance **mechanical seal**
* Different Mounting Styles,Easy Installation
* Low Maintenance Cost and available spare parts
* Network of **Technical Support**
* **ISO 9001** Manufacturing Facility

Product Description

PEDJ Fire Pump System

(End Suction **Electric** Centrifugal Pump + End Suction Pump with **Diesel** Engine + Multistage **Jockey** Pump + Control Panel Box)

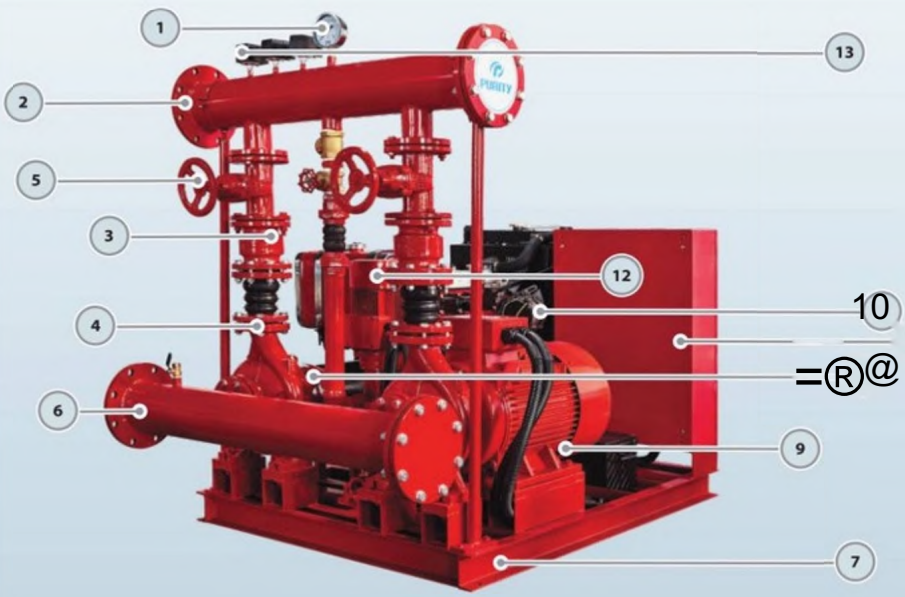

1、 **Pressure Gauge**
2 、 **Discharge Pipe**
3 、 **Check valve**
4 、 **Flexible joint**
5 、 **Gate valve**
6 、 **Suction Pipe**
7 、 **Base**
8 、 **Diesel Pump**
9 、 **Electric Pump**
10 、 **Diesel Engine**
11 、 **Control Panel**
12 、 **Jockey pump**
13 、 **Pressure Switch**

General Description for Fire Pump Set PEDJ

* PEDJ Fire Pump Set consists of **End Suction Centrifugal Pump** driven by Electric Motor, End Suction **Diesel Pump,** and **Vertical Jockey Pump.**
* Pumps are assembled with suction and discharge line accessories as well as **Control Panel.**
* Available **Flow Capacities 50-1500GPM.**
* Available **Head/Pressure 1-14bar.**

* Accessories include Suction pipe, Discharge pipe with Flanges, Battery, Gate Valves, Check Valves, Flexible Expansion Joints, Pressure Switches, Pressure Gauge,
Base Frame, etc.

Lifeguards for your safety

A Fire pump is an essential element for all highrise buildings. Fire pumps are also a necessity in warehouses and facilities that do not have adequate city water pressure.
With more than two decades of experience, we design, test and manufacture fire pumps to cater to diversified needs of our customers.
Our standard pumps can be manufactured in skid mounted units which are piped and wired. All the pumps are on a common base which also can be enclosed.
Our most comprehensive types of pumps used for fire service include end suction pump, horizontal split case pump and vertical pump models including stainless steel,
cast iron and bronze construction in standard configurations are provided by us. Close coupled frame mounted and engine drive options are also available.

APPLICATIONS

* Fire Fighting System
* Fire Hose Rack Systems
* Fire Hose Reel Systems
* Fire Foam Systems
* Fire Deluge Systems
* Fire Hydrant Systems
* Fire Sprinkler Systems

USING LIMITS

Liquid temperature between -10°C and +120°C
Ambient temperature up to +50°C
Max. working pressure 15 bar
Continuous service S1

PATENTS

Registered model PST
Registered Patent Design n° 201530478502.0

Main Pumps for Fire Pump Set PEDJ

Fire Pump Group Technical Data and Quick Selection Table for Pump Models

GPM	BAR	REGULAR MODEL MODELO REGULAR	MOTOR PUMP MOrOBOMBA	PUMP FOR ELECTRIC *B (WBA PARA ELeCTWaOAD* 2900rpm	PUMP COUPUNG MOTOR MOTOR *CONEX16NDE* LA BOMBA	MOTOR MOTOR	CMESBL OISSEI.	JOCKEY *JOCKEY*
								
50	6	P€W5（y6-S5-S5-2	PX 32-200/40	-	-	-	17BS5HP	PV4x9/2HP
的		托邸的 Y7-10-8.6-3	PST3225V7S	PS 32-2S（y75	PSM 32-2S<y75	YBI»S227Skw	186-8.6HP	PV6к11/3HP
100		PHW1W71O>«.6>3	PST32-25V7S	PS 12-2S（y75	PSM S-2S4W5	YB-I»S2-2-75Itw	IdS^HP	PV6«11/3HP
120		PH)H2（y710-10-3	PST 32-25O/7SD	PS32.2M"5H	PSM 32-25<y75H	YB.132S.2.7SICW	192-10HP	PV6к11/3HP
150		PHW1SQ/71S103	PST 40-250/UO	PS 40250/110	P^M4a2WU0	YE3-160M12-IIkw	19M0HP	PV6xII/3HP
200	7	PH)J20（y7-20-27-3	PST 4O-2S0/1S0	PS 40-250/150	PSM 40-2$<VI$0	YE3460M2>2-I$kw	38O-27HP	PV6xII/3HP
250		P€OI2»y7-25-27-4	PST SO-2SO/1S5	PS 50^250/135	pSMsa?s（viss	YB.160I.218Aw	38O27HP	PV8xI2/4HP
300		P®J3O（y7.3O-32-4	PST5M50/2M	PS 50-250/220	PSM SO-2S（y22O	YE3-1BOM-2-221CW	33S-32HP	PV8xI2/4HP
350		P(DBS（y7. JO-32-4	PST 50*250/220	PS »250/220	P$M5a2S（y220	YB-W0I^2-2»w	38S32HP	PV8«12/4HP
400		PHMWWZ40・级 SS	PST 65-250/300	PS6S-25W30O	PSM6S-2SV300	YB-200U-2-3Ckw	480-18HP	PV12xI2^SHP
SOO		PWS00/^50 »5S	PST 65-2S0/J70	PS6S-25O/J7O	PSM 6S-2«yP0	YB-2O0Q237kw	49CN-58HP	PV 12ш12/SSHP
7S0	8	P£DJ75<V8-75-75-7S	PST80-2S0/W)	PS 80250/550	(9) 8O2SVS50	YE3-25OM.2-5SIMr	490Z7SW	PV 12xI7/7.SHP
1000		WDI1000/8-W0 99 10	PST 100-25V7SO	P$ 100-25V750	PSM 100-25(^750	YU-28OS-2-7Skw	4102ZWHP	PV »x7/10HP
1250		Pm）1250/S-IS0-I»-10	-	PS 125^50/1100	wm i2S2s（ynoo	YB31S$-2-U0Icw	6102Q-13CHP	PV 30«7ACHP
SOO		P£W$00/U>60-6175	-	PS6$-315/«O	PSM 6S-31S/450	YB-225M^2-4»cw	49O61HP	PV 12xI7/7.SHP
7S0	10	P€DI75（yiOWO<9^10	-	PS8O31S/7S0	PSM8O-11V7S0	YE328O$>2-75kw	41Q2Z99HP	PV 3O«7A0HP
1000		PWJ1000/1012SU342	-	PS 100-315^900	PSM 100-315*900	YB-280^2-90kw	4108Z-113HP	PV 30«9/12HP
12S0		PH>I125（M1O-130-170-15	-	PS 125-315/1320	PSM US00 1320	YB-31SM-2-132itw	6102ZS17CHP	PV 30xII/ISHP
SOO		Ptwwyi3-100-9942	-	PS65-31S/75O	PSM 格315/750	YU-28OS-2-75kw	4102Z-99HP	PV »«9A2HP
750		PEQJ7S0/B12S11312	-	PS 的31S/90O	PSM8M1VSOO	YB-28OI^2-90Icw	4108Z-113HP	PV 30x9A2HP
1000	13	PtDJIOOOA 3-150130 15	-	PS100315A100	PSM 10O-31S<U00	YB315$-2110icw	6102Q130HP	PV XxIVISHP
12S0		ra»125（m 抓 1704S	-	PS 12^31^1600	WM 12S31V1600	YEMISU-2460kw	6102ZS-170HP	W »xII/15HP
1S00		pa>ii5ayi3-220-i70.i5	-	f>S12S-3iyi«00	PSM 125*31^1600	YE>31SU-2460kw	G102ZS-170HP	PV »xIV15HP

Other sizes can provide on request ***/Bojo ptdkio otrot modtfot diponiblt.***

TECHNICAL DATA

50/60 Hz n=2900/3500 1/min

GPM	Bar	Pump for diesel 2900rpm	Pump for electric 3500rpm	Motor pump 3500rpm
80	7	PS32-250/75	PS32-200/75	PST32-200/75
100	7	PS32-250/75	PS32-200/75	PST32-200/75
120	7	PS32-250/75H	PS32-200/75H	PST32-200/75D
150	7	PS40-250/110	PS40-200/110	PST40-200/110
200	7	PS40-250/150	PS40-200/150	PST40-200/150
250	7	PS50-250/185	PS50-200/185	PST50-200/185
300	7	PS50-250/220	PS50-200/220	PST5O-2OO/22O
350	7	PS50-250/220	PS50-200/220	PST5O-2OO/22O
400	7	PS65-250/300	PS65-200/300	PST65-200/300
500	7	PS6S-250/300	PS65-200/300	PST65-200/300
500	8	PS65-250/370	PS65-200/370	PST65-200/370
500	9	PS65-315/370	PS65-250/370	-
500	10	PS65-315/450	PS65-250/450	-
500	11	PS65-315/550	PS65-250/550	-
500	12	PS65-315/750	PS65-250/750	-
500	13	PS65-315/750	PS65-250/750	■
750	7	PS80-250/450	PS80-200/450	PST80-200/450
750	8	PS80-250/S50	PS80-200/550	PST80-200/550
750	9	PS80-315/750	PS80-250/750	垂
750	10	PS80-315/750	PS80-250/750	-
750	11	PS80-315/750	PS80-250/750	垂
750	12	PS80-315/900	PS80-250/900	霧
750	13	PS80-315/900	PS80-250/900	-
1000	7	PS1OO-25O/55O	PS1OO-2OO/55O	PST100-200/550
1000	8	PS100-250/750	PS100-200/750	PST100-200/750
1000	9	PS1OO-315/75O	PS100-250/750	-
1000	10	PS1OO-315/9OO	PS100-250/900	垂
1000	11	PS100-315/900	PS100-250/900	-
1000	12	PS1OO-315/11OO	PS100-250/1100	-
1000	13	PS1OO-315/11OO	PS100-250/1100	垂
1000	14	PSC80-370A1/1320	PSC80-370A1/1320	-
1000	15	PSC80-370A1/1320	PSC80-370A1/1320	-
1250	7	PS125-25O/9OO	PS125-200/900	-
1250	8	PS125-250/1100	PS125-200/1100	-
1250	9	PS125-315/1100	PS125-25O/11OO	■
1250	10	PS125-315/1320	PS125-250/1320	-
1250	11	PS125-315/1320	PS125-250/1320	噴
1250	12	PS125-315/1600	PS125-25O/16OO	-
1250	13	PS125-315/1600	PS125-250/1600	-

GPM	Bar	Pump for diesel 2900rpm	Pump for electric 3500rpm	Motor pump 3500rpm
1250	14	PSC100-375A2/2000	PSC100-375A2/2000	-
1250	15	PSC100-375A2/2000	PSC100-375A2/2000	-
1250	17	PSC100-375B1/2500	PSC100-375B1/2500	-
1500	8	PS125-250/1100	PS125-200/1100	-
1500	9	PS125-315/1100	PS125-250/1100	-
1500	10	PS125-315/1320	PS125-250/1320	-
1500	11	PS125-315/1320	PS125-250/1320	-
1500	12	PS125-315/1600	PS125-250/1600	-
1500	13	PS125-315/1600	PS125-250/1600	-
1500	15	PSC100-375B1/2500	PSC100-375B1/2500	-
1500	18	PSC100-375A1/2500	PSC1OO-375A1/25OO	-
2000	8	PS150-250/1600	PS150-200/1600	-
2000	10	PS150-315/2000	PS150-250/2000	-
2000	11	PSC125-290A1/2000	PSC125-290A1/2000	-
2000	12	PSC125-365A3/2500	PSC125-365A3/25OO	-
2000	13	PS15O-315/25OO	PS15O-25O/25OO	-
2000	15	PSC125-365A2/3150	PSC125-365A2/3150	-
2000	17	PSC125-365B1/3550	PSC125-365B1/355O	-
2500	8	PS150-250/1600	PS150-200/1600	-
2500	10	PS150-315/2000	PS150-250/2000	-
2500	12	PS15O-315/25OO	PS150-250/2500	-
2500	13	PSC150-460B2/3150	PSC150^60B2/3150	-
2500	15	PSC125-365A2/3550	PSC125-365A2/3550	-
2500	17	PSC125-365BV3550	PSC125-365B1/355O	-
3000	10	PSC15O-36OA3/25OO	PSC15O-36OA3/25OO	-
3000	12	PSC150-360A2/3550	PSC15O-36OA2/355O	-
3000	13	PSC150^60B2/3550	PSC150-460B2/3550	-
3000	14	PSC150-360B1/4000	PSC150-360B1/4000	-
3000	16	PSC1SCM60B1/4500	PSC150-460BV4500	-
4000	11	PSC200-420B3/4000	PSC200-420B3/4000	-
4000	14	PSC200-420B2/5000	PSC200-420B2/5000	-
4000	15	PSC150-360A1/5000	PSC15O-36OA1/5OOO	-
4000	17	PSC150-460AV5600	PSC150-460A1/5600	-
5000	10	PSC200-320B2/4000	PSC200-320B2/4000	-
5000	11	PSC200-320B1/5000	PSC200-320BV5000	-
5000	12	PSC200-320A1/5600	PSC200-320A1/5600	-
5000	14	PSC200-420A2/5600	PSC200420A2/5600	-
5000	16	PSC20CM20B1/7100	PSC200^20BI/7100	-
5000	17	PSC200-420AV8000	PSC20CM20A1/8000	-

Other sizes can provide on request.

Product Description

PEDJ Fire Pump System

(End Suction **Electric** Centrifugal Pump + End Suction Pump with **Diesel** Engine + Multistage **Jockey** Pump + Control Panel Box)

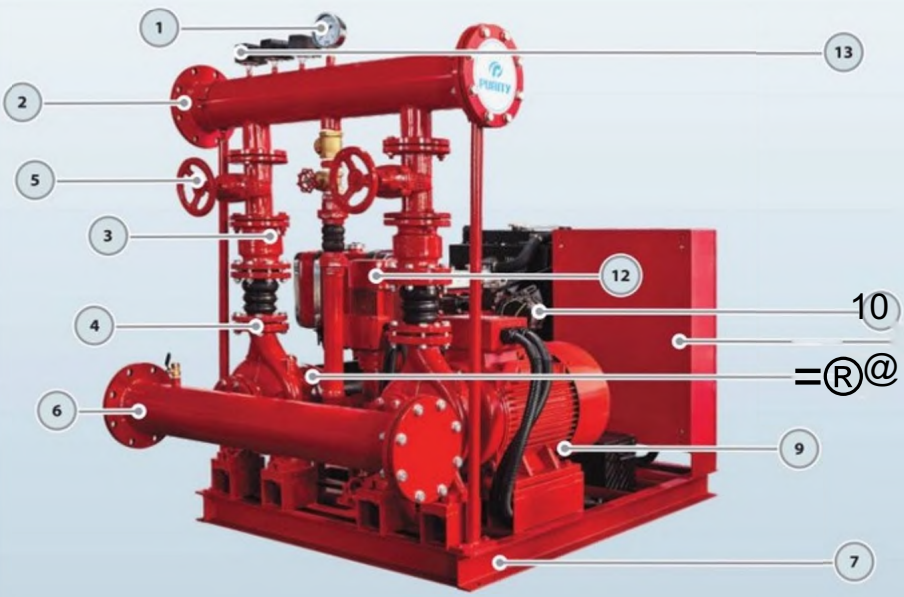

1、 **Pressure Gauge**
2 、 **Discharge Pipe**
3 、 **Check valve**
4 、 **Flexible joint**
5 、 **Gate valve**
6 、 **Suction Pipe**
7 、 **Base**
8 、 **Diesel Pump**
9 、 **Electric Pump**
10 、 **Diesel Engine**
11 、 **Control Panel**
12 、 **Jockey pump**
13 、 **Pressure Switch**

General Description for Fire Pump Set PEDJ

* PEDJ Fire Pump Set consists of **End Suction Centrifugal Pump** driven by Electric Motor, End Suction **Diesel Pump,** and **Vertical Jockey Pump.**
* Pumps are assembled with suction and discharge line accessories as well as **Control Panel.**
* Available **Flow Capacities 50-1500GPM.**
* Available **Head/Pressure 1-14bar.**

* Accessories include Suction pipe, Discharge pipe with Flanges, Battery, Gate Valves, Check Valves, Flexible Expansion Joints, Pressure Switches, Pressure Gauge,
Base Frame, etc.

Lifeguards for your safety

A Fire pump is an essential element for all highrise buildings. Fire pumps are also a necessity in warehouses and facilities that do not have adequate city water pressure.
With more than two decades of experience, we design, test and manufacture fire pumps to cater to diversified needs of our customers.
Our standard pumps can be manufactured in skid mounted units which are piped and wired. All the pumps are on a common base which also can be enclosed.
Our most comprehensive types of pumps used for fire service include end suction pump, horizontal split case pump and vertical pump models including stainless steel,
cast iron and bronze construction in standard configurations are provided by us. Close coupled frame mounted and engine drive options are also available.

APPLICATIONS

* Fire Fighting System
* Fire Hose Rack Systems
* Fire Hose Reel Systems
* Fire Foam Systems
* Fire Deluge Systems
* Fire Hydrant Systems
* Fire Sprinkler Systems

USING LIMITS

Liquid temperature between -10°C and +120°C
Ambient temperature up to +50°C
Max. working pressure 15 bar
Continuous service S1

PATENTS

Registered model PST
Registered Patent Design n° 201530478502.0

Main Pumps for Fire Pump Set PEDJ

Fire Pump Group Technical Data and Quick Selection Table for Pump Models

GPM	BAR	REGULAR MODEL MODELO REGULAR	MOTOR PUMP MOrOBOMBA	PUMP FOR ELECTRIC *B (WBA PARA ELeCTWaOAD* 2900rpm	PUMP COUPUNG MOTOR MOTOR *CONEX16NDE* LA BOMBA	MOTOR MOTOR	CMESBL OISSEI.	JOCKEY *JOCKEY*
								
50	6	P€W5（y6-S5-S5-2	PX 32-200/40	-	-	-	17BS5HP	PV4x9/2HP
的		托邸的 Y7-10-8.6-3	PST3225V7S	PS 32-2S（y75	PSM 32-2S<y75	YBI»S227Skw	186-8.6HP	PV6к11/3HP
100		PHW1W71O>«.6>3	PST32-25V7S	PS 12-2S（y75	PSM S-2S4W5	YB-I»S2-2-75Itw	IdS^HP	PV6«11/3HP
120		PH)H2（y710-10-3	PST 32-25O/7SD	PS32.2M"5H	PSM 32-25<y75H	YB.132S.2.7SICW	192-10HP	PV6к11/3HP
150		PHW1SQ/71S103	PST 40-250/UO	PS 40250/110	P^M4a2WU0	YE3-160M12-IIkw	19M0HP	PV6xII/3HP
200	7	PH)J20（y7-20-27-3	PST 4O-2S0/1S0	PS 40-250/150	PSM 40-2$<VI$0	YE3460M2>2-I$kw	38O-27HP	PV6xII/3HP
250		P€OI2»y7-25-27-4	PST SO-2SO/1S5	PS 50^250/135	pSMsa?s（viss	YB.160I.218Aw	38O27HP	PV8xI2/4HP
300		P®J3O（y7.3O-32-4	PST5M50/2M	PS 50-250/220	PSM SO-2S（y22O	YE3-1BOM-2-221CW	33S-32HP	PV8xI2/4HP
350		P(DBS（y7. JO-32-4	PST 50*250/220	PS »250/220	P$M5a2S（y220	YB-W0I^2-2»w	38S32HP	PV8«12/4HP
400		PHMWWZ40・级 SS	PST 65-250/300	PS6S-25W30O	PSM6S-2SV300	YB-200U-2-3Ckw	480-18HP	PV12xI2^SHP
SOO		PWS00/^50 »5S	PST 65-2S0/J70	PS6S-25O/J7O	PSM 6S-2«yP0	YB-2O0Q237kw	49CN-58HP	PV 12ш12/SSHP
7S0	8	P£DJ75<V8-75-75-7S	PST80-2S0/W)	PS 80250/550	(9) 8O2SVS50	YE3-25OM.2-5SIMr	490Z7SW	PV 12xI7/7.SHP
1000		WDI1000/8-W0 99 10	PST 100-25V7SO	P$ 100-25V750	PSM 100-25(^750	YU-28OS-2-7Skw	4102ZWHP	PV »x7/10HP
1250		Pm）1250/S-IS0-I»-10	-	PS 125^50/1100	wm i2S2s（ynoo	YB31S$-2-U0Icw	6102Q-13CHP	PV 30«7ACHP
SOO		P£W$00/U>60-6175	-	PS6$-315/«O	PSM 6S-31S/450	YB-225M^2-4»cw	49O61HP	PV 12xI7/7.SHP
7S0	10	P€DI75（yiOWO<9^10	-	PS8O31S/7S0	PSM8O-11V7S0	YE328O$>2-75kw	41Q2Z99HP	PV 3O«7A0HP
1000		PWJ1000/1012SU342	-	PS 100-315^900	PSM 100-315*900	YB-280^2-90kw	4108Z-113HP	PV 30«9/12HP
12S0		PH>I125（M1O-130-170-15	-	PS 125-315/1320	PSM US00 1320	YB-31SM-2-132itw	6102ZS17CHP	PV 30xII/ISHP
SOO		Ptwwyi3-100-9942	-	PS65-31S/75O	PSM 格315/750	YU-28OS-2-75kw	4102Z-99HP	PV »«9A2HP
750		PEQJ7S0/B12S11312	-	PS 的31S/90O	PSM8M1VSOO	YB-28OI^2-90Icw	4108Z-113HP	PV 30x9A2HP
1000	13	PtDJIOOOA 3-150130 15	-	PS100315A100	PSM 10O-31S<U00	YB315$-2110icw	6102Q130HP	PV XxIVISHP
12S0		ra»125（m 抓 1704S	-	PS 12^31^1600	WM 12S31V1600	YEMISU-2460kw	6102ZS-170HP	W »xII/15HP
1S00		pa>ii5ayi3-220-i70.i5	-	f>S12S-3iyi«00	PSM 125*31^1600	YE>31SU-2460kw	G102ZS-170HP	PV »xIV15HP

Other sizes can provide on request ***/Bojo ptdkio otrot modtfot diponiblt.***

TECHNICAL DATA

50/60 Hz n=2900/3500 1/min

GPM	Bar	Pump for diesel 2900rpm	Pump for electric 3500rpm	Motor pump 3500rpm
80	7	PS32-250/75	PS32-200/75	PST32-200/75
100	7	PS32-250/75	PS32-200/75	PST32-200/75
120	7	PS32-250/75H	PS32-200/75H	PST32-200/75D
150	7	PS40-250/110	PS40-200/110	PST40-200/110
200	7	PS40-250/150	PS40-200/150	PST40-200/150
250	7	PS50-250/185	PS50-200/185	PST50-200/185
300	7	PS50-250/220	PS50-200/220	PST5O-2OO/22O
350	7	PS50-250/220	PS50-200/220	PST5O-2OO/22O
400	7	PS65-250/300	PS65-200/300	PST65-200/300
500	7	PS6S-250/300	PS65-200/300	PST65-200/300
500	8	PS65-250/370	PS65-200/370	PST65-200/370
500	9	PS65-315/370	PS65-250/370	-
500	10	PS65-315/450	PS65-250/450	-
500	11	PS65-315/550	PS65-250/550	-
500	12	PS65-315/750	PS65-250/750	-
500	13	PS65-315/750	PS65-250/750	■
750	7	PS80-250/450	PS80-200/450	PST80-200/450
750	8	PS80-250/S50	PS80-200/550	PST80-200/550
750	9	PS80-315/750	PS80-250/750	垂
750	10	PS80-315/750	PS80-250/750	-
750	11	PS80-315/750	PS80-250/750	垂
750	12	PS80-315/900	PS80-250/900	霧
750	13	PS80-315/900	PS80-250/900	-
1000	7	PS1OO-25O/55O	PS1OO-2OO/55O	PST100-200/550
1000	8	PS100-250/750	PS100-200/750	PST100-200/750
1000	9	PS1OO-315/75O	PS100-250/750	-
1000	10	PS1OO-315/9OO	PS100-250/900	垂
1000	11	PS100-315/900	PS100-250/900	-
1000	12	PS1OO-315/11OO	PS100-250/1100	-
1000	13	PS1OO-315/11OO	PS100-250/1100	垂
1000	14	PSC80-370A1/1320	PSC80-370A1/1320	-
1000	15	PSC80-370A1/1320	PSC80-370A1/1320	-
1250	7	PS125-25O/9OO	PS125-200/900	-
1250	8	PS125-250/1100	PS125-200/1100	-
1250	9	PS125-315/1100	PS125-25O/11OO	■
1250	10	PS125-315/1320	PS125-250/1320	-
1250	11	PS125-315/1320	PS125-250/1320	噴
1250	12	PS125-315/1600	PS125-25O/16OO	-
1250	13	PS125-315/1600	PS125-250/1600	-

GPM	Bar	Pump for diesel 2900rpm	Pump for electric 3500rpm	Motor pump 3500rpm
1250	14	PSC100-375A2/2000	PSC100-375A2/2000	-
1250	15	PSC100-375A2/2000	PSC100-375A2/2000	-
1250	17	PSC100-375B1/2500	PSC100-375B1/2500	-
1500	8	PS125-250/1100	PS125-200/1100	-
1500	9	PS125-315/1100	PS125-250/1100	-
1500	10	PS125-315/1320	PS125-250/1320	-
1500	11	PS125-315/1320	PS125-250/1320	-
1500	12	PS125-315/1600	PS125-250/1600	-
1500	13	PS125-315/1600	PS125-250/1600	-
1500	15	PSC100-375B1/2500	PSC100-375B1/2500	-
1500	18	PSC100-375A1/2500	PSC1OO-375A1/25OO	-
2000	8	PS150-250/1600	PS150-200/1600	-
2000	10	PS150-315/2000	PS150-250/2000	-
2000	11	PSC125-290A1/2000	PSC125-290A1/2000	-
2000	12	PSC125-365A3/2500	PSC125-365A3/25OO	-
2000	13	PS15O-315/25OO	PS15O-25O/25OO	-
2000	15	PSC125-365A2/3150	PSC125-365A2/3150	-
2000	17	PSC125-365B1/3550	PSC125-365B1/355O	-
2500	8	PS150-250/1600	PS150-200/1600	-
2500	10	PS150-315/2000	PS150-250/2000	-
2500	12	PS15O-315/25OO	PS150-250/2500	-
2500	13	PSC150-460B2/3150	PSC150^60B2/3150	-
2500	15	PSC125-365A2/3550	PSC125-365A2/3550	-
2500	17	PSC125-365BV3550	PSC125-365B1/355O	-
3000	10	PSC15O-36OA3/25OO	PSC15O-36OA3/25OO	-
3000	12	PSC150-360A2/3550	PSC15O-36OA2/355O	-
3000	13	PSC150^60B2/3550	PSC150-460B2/3550	-
3000	14	PSC150-360B1/4000	PSC150-360B1/4000	-
3000	16	PSC1SCM60B1/4500	PSC150-460BV4500	-
4000	11	PSC200-420B3/4000	PSC200-420B3/4000	-
4000	14	PSC200-420B2/5000	PSC200-420B2/5000	-
4000	15	PSC150-360A1/5000	PSC15O-36OA1/5OOO	-
4000	17	PSC150-460AV5600	PSC150-460A1/5600	-
5000	10	PSC200-320B2/4000	PSC200-320B2/4000	-
5000	11	PSC200-320B1/5000	PSC200-320BV5000	-
5000	12	PSC200-320A1/5600	PSC200-320A1/5600	-
5000	14	PSC200-420A2/5600	PSC200420A2/5600	-
5000	16	PSC20CM20B1/7100	PSC200^20BI/7100	-
5000	17	PSC200-420AV8000	PSC20CM20A1/8000	-

Other sizes can provide on request.

Fire Pump System PEDJ

Fire Pump Set with Electric Diesel and Jockey Pump

TECHNICAL DESCRIPTION

* Flow **50GPM--5000GPM**
* Head/Pressure **5-17bar (50-170m)**
* Switch **Automatically** among the three pumps
* Both **Manual and Automatic** operation is available
* Can work when the power is off
* **Customized size and pump group**
* YE3 **high efficient motor** with protection **IP55 class F**
* Pump case with **Anti-corrosive** coating
* With **NSK** bearings, wear resistance **mechanical seal**
* Different Mounting Styles,Easy Installation
* **ISO 9001** Manufacturing Facility

Product Description

PEDJ Fire Pump System

(End Suction **Electric** Centrifugal Pump + End Suction Pump with **Diesel** Engine + Multistage **Jockey** Pump + Control Panel Box)

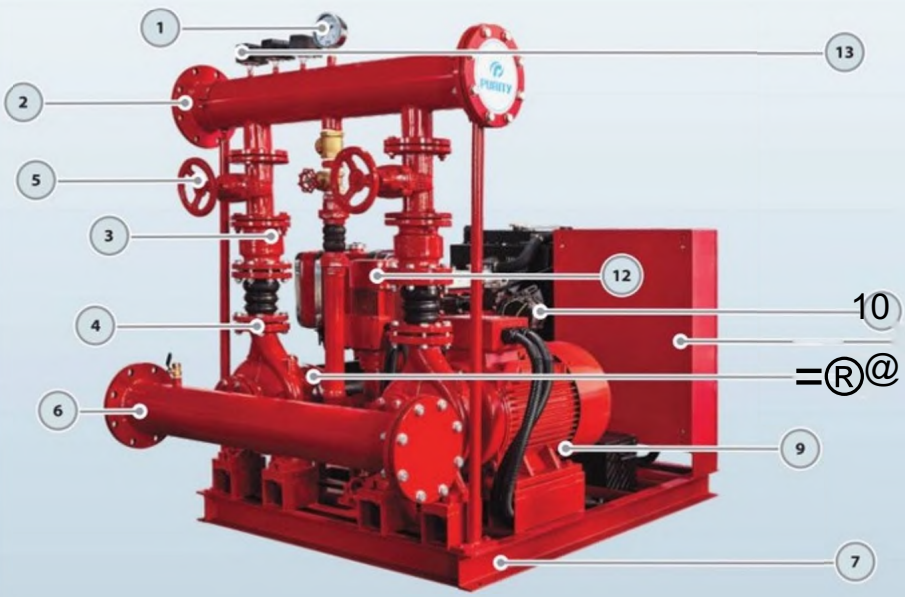

1、 **Pressure Gauge**
2 、 **Discharge Pipe**
3 、 **Check valve**
4 、 **Flexible joint**
5 、 **Gate valve**
6 、 **Suction Pipe**
7 、 **Base**
8 、 **Diesel Pump**
9 、 **Electric Pump**
10 、 **Diesel Engine**
11 、 **Control Panel**
12 、 **Jockey pump**
13 、 **Pressure Switch**

General Description for Fire Pump Set PEDJ

* PEDJ Fire Pump Set consists of **End Suction Centrifugal Pump** driven by Electric Motor, End Suction **Diesel Pump,** and **Vertical Jockey Pump.**
* Pumps are assembled with suction and discharge line accessories as well as **Control Panel.**
* Available **Flow Capacities 50-1500GPM.**
* Available **Head/Pressure 1-14bar.**

* Accessories include Suction pipe, Discharge pipe with Flanges, Battery, Gate Valves, Check Valves, Flexible Expansion Joints, Pressure Switches, Pressure Gauge,
Base Frame, etc.

Lifeguards for your safety

A Fire pump is an essential element for all highrise buildings. Fire pumps are also a necessity in warehouses and facilities that do not have adequate city water pressure.
With more than two decades of experience, we design, test and manufacture fire pumps to cater to diversified needs of our customers.
Our standard pumps can be manufactured in skid mounted units which are piped and wired. All the pumps are on a common base which also can be enclosed.
Our most comprehensive types of pumps used for fire service include end suction pump, horizontal split case pump and vertical pump models including stainless steel,
cast iron and bronze construction in standard configurations are provided by us. Close coupled frame mounted and engine drive options are also available.

APPLICATIONS

* Fire Fighting System
* Fire Hose Rack Systems
* Fire Hose Reel Systems
* Fire Foam Systems
* Fire Deluge Systems
* Fire Hydrant Systems
* Fire Sprinkler Systems

USING LIMITS

Liquid temperature between -10°C and +120°C
Ambient temperature up to +50°C
Max. working pressure 15 bar
Continuous service S1

PATENTS

Registered model PST
Registered Patent Design n° 201530478502.0

Main Pumps for Fire Pump Set PEDJ

Fire Pump Group Technical Data and Quick Selection Table for Pump Models

GPM	BAR	REGULAR MODEL MODELO REGULAR	MOTOR PUMP MOrOBOMBA	PUMP FOR ELECTRIC *B (WBA PARA ELeCTWaOAD* 2900rpm	PUMP COUPUNG MOTOR MOTOR *CONEX16NDE* LA BOMBA	MOTOR MOTOR	CMESBL OISSEI.	JOCKEY *JOCKEY*
								
50	6	P€W5（y6-S5-S5-2	PX 32-200/40	-	-	-	17BS5HP	PV4x9/2HP
的		托邸的 Y7-10-8.6-3	PST3225V7S	PS 32-2S（y75	PSM 32-2S<y75	YBI»S227Skw	186-8.6HP	PV6к11/3HP
100		PHW1W71O>«.6>3	PST32-25V7S	PS 12-2S（y75	PSM S-2S4W5	YB-I»S2-2-75Itw	IdS^HP	PV6«11/3HP
120		PH)H2（y710-10-3	PST 32-25O/7SD	PS32.2M"5H	PSM 32-25<y75H	YB.132S.2.7SICW	192-10HP	PV6к11/3HP
150		PHW1SQ/71S103	PST 40-250/UO	PS 40250/110	P^M4a2WU0	YE3-160M12-IIkw	19M0HP	PV6xII/3HP
200	7	PH)J20（y7-20-27-3	PST 4O-2S0/1S0	PS 40-250/150	PSM 40-2$<VI$0	YE3460M2>2-I$kw	38O-27HP	PV6xII/3HP
250		P€OI2»y7-25-27-4	PST SO-2SO/1S5	PS 50^250/135	pSMsa?s（viss	YB.160I.218Aw	38O27HP	PV8xI2/4HP
300		P®J3O（y7.3O-32-4	PST5M50/2M	PS 50-250/220	PSM SO-2S（y22O	YE3-1BOM-2-221CW	33S-32HP	PV8xI2/4HP
350		P(DBS（y7. JO-32-4	PST 50*250/220	PS »250/220	P$M5a2S（y220	YB-W0I^2-2»w	38S32HP	PV8«12/4HP
400		PHMWWZ40・级 SS	PST 65-250/300	PS6S-25W30O	PSM6S-2SV300	YB-200U-2-3Ckw	480-18HP	PV12xI2^SHP
SOO		PWS00/^50 »5S	PST 65-2S0/J70	PS6S-25O/J7O	PSM 6S-2«yP0	YB-2O0Q237kw	49CN-58HP	PV 12ш12/SSHP
7S0	8	P£DJ75<V8-75-75-7S	PST80-2S0/W)	PS 80250/550	(9) 8O2SVS50	YE3-25OM.2-5SIMr	490Z7SW	PV 12xI7/7.SHP
1000		WDI1000/8-W0 99 10	PST 100-25V7SO	P$ 100-25V750	PSM 100-25(^750	YU-28OS-2-7Skw	4102ZWHP	PV »x7/10HP
1250		Pm）1250/S-IS0-I»-10	-	PS 125^50/1100	wm i2S2s（ynoo	YB31S$-2-U0Icw	6102Q-13CHP	PV 30«7ACHP
SOO		P£W$00/U>60-6175	-	PS6$-315/«O	PSM 6S-31S/450	YB-225M^2-4»cw	49O61HP	PV 12xI7/7.SHP
7S0	10	P€DI75（yiOWO<9^10	-	PS8O31S/7S0	PSM8O-11V7S0	YE328O$>2-75kw	41Q2Z99HP	PV 3O«7A0HP
1000		PWJ1000/1012SU342	-	PS 100-315^900	PSM 100-315*900	YB-280^2-90kw	4108Z-113HP	PV 30«9/12HP
12S0		PH>I125（M1O-130-170-15	-	PS 125-315/1320	PSM US00 1320	YB-31SM-2-132itw	6102ZS17CHP	PV 30xII/ISHP
SOO		Ptwwyi3-100-9942	-	PS65-31S/75O	PSM 格315/750	YU-28OS-2-75kw	4102Z-99HP	PV »«9A2HP
750		PEQJ7S0/B12S11312	-	PS 的31S/90O	PSM8M1VSOO	YB-28OI^2-90Icw	4108Z-113HP	PV 30x9A2HP
1000	13	PtDJIOOOA 3-150130 15	-	PS100315A100	PSM 10O-31S<U00	YB315$-2110icw	6102Q130HP	PV XxIVISHP
12S0		ra»125（m 抓 1704S	-	PS 12^31^1600	WM 12S31V1600	YEMISU-2460kw	6102ZS-170HP	W »xII/15HP
1S00		pa>ii5ayi3-220-i70.i5	-	f>S12S-3iyi«00	PSM 125*31^1600	YE>31SU-2460kw	G102ZS-170HP	PV »xIV15HP

Other sizes can provide on request ***/Bojo ptdkio otrot modtfot diponiblt.***

TECHNICAL DATA

50/60 Hz n=2900/3500 1/min

GPM	Bar	Pump for diesel 2900rpm	Pump for electric 3500rpm	Motor pump 3500rpm
80	7	PS32-250/75	PS32-200/75	PST32-200/75
100	7	PS32-250/75	PS32-200/75	PST32-200/75
120	7	PS32-250/75H	PS32-200/75H	PST32-200/75D
150	7	PS40-250/110	PS40-200/110	PST40-200/110
200	7	PS40-250/150	PS40-200/150	PST40-200/150
250	7	PS50-250/185	PS50-200/185	PST50-200/185
300	7	PS50-250/220	PS50-200/220	PST5O-2OO/22O
350	7	PS50-250/220	PS50-200/220	PST5O-2OO/22O
400	7	PS65-250/300	PS65-200/300	PST65-200/300
500	7	PS6S-250/300	PS65-200/300	PST65-200/300
500	8	PS65-250/370	PS65-200/370	PST65-200/370
500	9	PS65-315/370	PS65-250/370	-
500	10	PS65-315/450	PS65-250/450	-
500	11	PS65-315/550	PS65-250/550	-
500	12	PS65-315/750	PS65-250/750	-
500	13	PS65-315/750	PS65-250/750	■
750	7	PS80-250/450	PS80-200/450	PST80-200/450
750	8	PS80-250/S50	PS80-200/550	PST80-200/550
750	9	PS80-315/750	PS80-250/750	垂
750	10	PS80-315/750	PS80-250/750	-
750	11	PS80-315/750	PS80-250/750	垂
750	12	PS80-315/900	PS80-250/900	霧
750	13	PS80-315/900	PS80-250/900	-
1000	7	PS1OO-25O/55O	PS1OO-2OO/55O	PST100-200/550
1000	8	PS100-250/750	PS100-200/750	PST100-200/750
1000	9	PS1OO-315/75O	PS100-250/750	-
1000	10	PS1OO-315/9OO	PS100-250/900	垂
1000	11	PS100-315/900	PS100-250/900	-
1000	12	PS1OO-315/11OO	PS100-250/1100	-
1000	13	PS1OO-315/11OO	PS100-250/1100	垂
1000	14	PSC80-370A1/1320	PSC80-370A1/1320	-
1000	15	PSC80-370A1/1320	PSC80-370A1/1320	-
1250	7	PS125-25O/9OO	PS125-200/900	-
1250	8	PS125-250/1100	PS125-200/1100	-
1250	9	PS125-315/1100	PS125-25O/11OO	■
1250	10	PS125-315/1320	PS125-250/1320	-
1250	11	PS125-315/1320	PS125-250/1320	噴
1250	12	PS125-315/1600	PS125-25O/16OO	-
1250	13	PS125-315/1600	PS125-250/1600	-

GPM	Bar	Pump for diesel 2900rpm	Pump for electric 3500rpm	Motor pump 3500rpm
1250	14	PSC100-375A2/2000	PSC100-375A2/2000	-
1250	15	PSC100-375A2/2000	PSC100-375A2/2000	-
1250	17	PSC100-375B1/2500	PSC100-375B1/2500	-
1500	8	PS125-250/1100	PS125-200/1100	-
1500	9	PS125-315/1100	PS125-250/1100	-
1500	10	PS125-315/1320	PS125-250/1320	-
1500	11	PS125-315/1320	PS125-250/1320	-
1500	12	PS125-315/1600	PS125-250/1600	-
1500	13	PS125-315/1600	PS125-250/1600	-
1500	15	PSC100-375B1/2500	PSC100-375B1/2500	-
1500	18	PSC100-375A1/2500	PSC1OO-375A1/25OO	-
2000	8	PS150-250/1600	PS150-200/1600	-
2000	10	PS150-315/2000	PS150-250/2000	-
2000	11	PSC125-290A1/2000	PSC125-290A1/2000	-
2000	12	PSC125-365A3/2500	PSC125-365A3/25OO	-
2000	13	PS15O-315/25OO	PS15O-25O/25OO	-
2000	15	PSC125-365A2/3150	PSC125-365A2/3150	-
2000	17	PSC125-365B1/3550	PSC125-365B1/355O	-
2500	8	PS150-250/1600	PS150-200/1600	-
2500	10	PS150-315/2000	PS150-250/2000	-
2500	12	PS15O-315/25OO	PS150-250/2500	-
2500	13	PSC150-460B2/3150	PSC150^60B2/3150	-
2500	15	PSC125-365A2/3550	PSC125-365A2/3550	-
2500	17	PSC125-365BV3550	PSC125-365B1/355O	-
3000	10	PSC15O-36OA3/25OO	PSC15O-36OA3/25OO	-
3000	12	PSC150-360A2/3550	PSC15O-36OA2/355O	-
3000	13	PSC150^60B2/3550	PSC150-460B2/3550	-
3000	14	PSC150-360B1/4000	PSC150-360B1/4000	-
3000	16	PSC1SCM60B1/4500	PSC150-460BV4500	-
4000	11	PSC200-420B3/4000	PSC200-420B3/4000	-
4000	14	PSC200-420B2/5000	PSC200-420B2/5000	-
4000	15	PSC150-360A1/5000	PSC15O-36OA1/5OOO	-
4000	17	PSC150-460AV5600	PSC150-460A1/5600	-
5000	10	PSC200-320B2/4000	PSC200-320B2/4000	-
5000	11	PSC200-320B1/5000	PSC200-320BV5000	-
5000	12	PSC200-320A1/5600	PSC200-320A1/5600	-
5000	14	PSC200-420A2/5600	PSC200420A2/5600	-
5000	16	PSC20CM20B1/7100	PSC200^20BI/7100	-
5000	17	PSC200-420AV8000	PSC20CM20A1/8000	-

Other sizes can provide on request.

Product Description

PEDJ Fire Pump System

(End Suction **Electric** Centrifugal Pump + End Suction Pump with **Diesel** Engine + Multistage **Jockey** Pump + Control Panel Box)

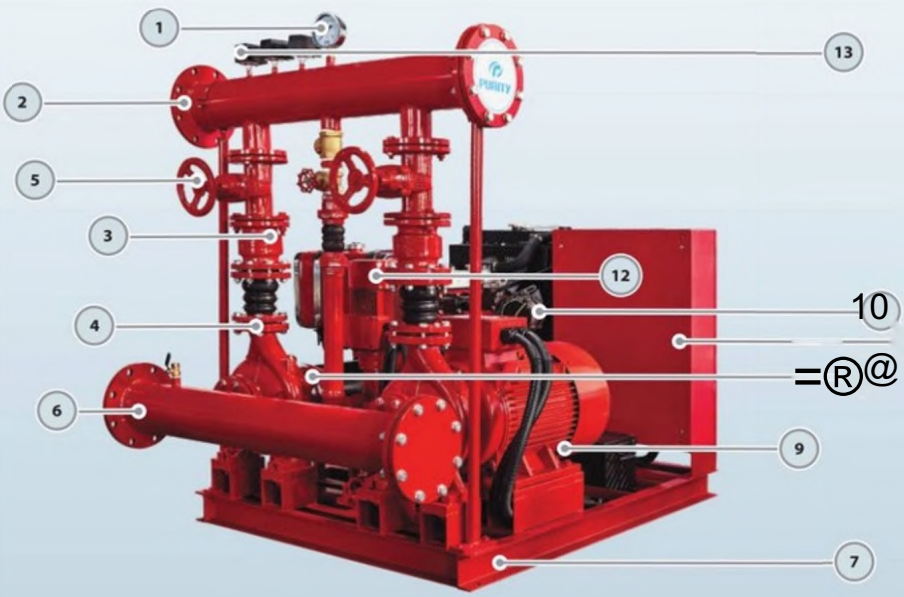

1、 **Pressure Gauge**
2 、 **Discharge Pipe**
3 、 **Check valve**
4 、 **Flexible joint**
5 、 **Gate valve**
6 、 **Suction Pipe**
7 、 **Base**
8 、 **Diesel Pump**
9 、 **Electric Pump**
10 、 **Diesel Engine**
11 、 **Control Panel**
12 、 **Jockey pump**
13 、 **Pressure Switch**

General Description for Fire Pump Set PEDJ

* PEDJ Fire Pump Set consists of **End Suction Centrifugal Pump** driven by Electric Motor, End Suction **Diesel Pump,** and **Vertical Jockey Pump.**
* Pumps are assembled with suction and discharge line accessories as well as **Control Panel.**
* Available **Flow Capacities 50-1500GPM.**
* Available **Head/Pressure 1-14bar.**

* Accessories include Suction pipe, Discharge pipe with Flanges, Battery, Gate Valves, Check Valves, Flexible Expansion Joints, Pressure Switches, Pressure Gauge,
Base Frame, etc.

Lifeguards for your safety

A Fire pump is an essential element for all highrise buildings. Fire pumps are also a necessity in warehouses and facilities that do not have adequate city water pressure.
With more than two decades of experience, we design, test and manufacture fire pumps to cater to diversified needs of our customers.
Our standard pumps can be manufactured in skid mounted units which are piped and wired. All the pumps are on a common base which also can be enclosed.
Our most comprehensive types of pumps used for fire service include end suction pump, horizontal split case pump and vertical pump models including stainless steel,
cast iron and bronze construction in standard configurations are provided by us. Close coupled frame mounted and engine drive options are also available.

APPLICATIONS

* Fire Fighting System
* Fire Hose Rack Systems
* Fire Hose Reel Systems
* Fire Foam Systems
* Fire Deluge Systems
* Fire Hydrant Systems
* Fire Sprinkler Systems

USING LIMITS

Liquid temperature between -10°C and +120°C
Ambient temperature up to +50°C
Max. working pressure 15 bar
Continuous service S1

PATENTS

Registered model PST
Registered Patent Design n° 201530478502.0

Main Pumps for Fire Pump Set PEDJ

Fire Pump Group Technical Data and Quick Selection Table for Pump Models

GPM	BAR	REGULAR MODEL MODELO REGULAR	MOTOR PUMP MOrOBOMBA	PUMP FOR ELECTRIC *B (WBA PARA ELeCTWaOAD* 2900rpm	PUMP COUPUNG MOTOR MOTOR *CONEX16NDE* LA BOMBA	MOTOR MOTOR	CMESBL OISSEI.	JOCKEY *JOCKEY*
								
50	6	P€W5（y6-S5-S5-2	PX 32-200/40	-	-	-	17BS5HP	PV4x9/2HP
的		托邸的 Y7-10-8.6-3	PST3225V7S	PS 32-2S（y75	PSM 32-2S<y75	YBI»S227Skw	186-8.6HP	PV6к11/3HP
100		PHW1W71O>«.6>3	PST32-25V7S	PS 12-2S（y75	PSM S-2S4W5	YB-I»S2-2-75Itw	IdS^HP	PV6«11/3HP
120		PH)H2（y710-10-3	PST 32-25O/7SD	PS32.2M"5H	PSM 32-25<y75H	YB.132S.2.7SICW	192-10HP	PV6к11/3HP
150		PHW1SQ/71S103	PST 40-250/UO	PS 40250/110	P^M4a2WU0	YE3-160M12-IIkw	19M0HP	PV6xII/3HP
200	7	PH)J20（y7-20-27-3	PST 4O-2S0/1S0	PS 40-250/150	PSM 40-2$<VI$0	YE3460M2>2-I$kw	38O-27HP	PV6xII/3HP
250		P€OI2»y7-25-27-4	PST SO-2SO/1S5	PS 50^250/135	pSMsa?s（viss	YB.160I.218Aw	38O27HP	PV8xI2/4HP
300		P®J3O（y7.3O-32-4	PST5M50/2M	PS 50-250/220	PSM SO-2S（y22O	YE3-1BOM-2-221CW	33S-32HP	PV8xI2/4HP
350		P(DBS（y7. JO-32-4	PST 50*250/220	PS »250/220	P$M5a2S（y220	YB-W0I^2-2»w	38S32HP	PV8«12/4HP
400		PHMWWZ40・级 SS	PST 65-250/300	PS6S-25W30O	PSM6S-2SV300	YB-200U-2-3Ckw	480-18HP	PV12xI2^SHP
SOO		PWS00/^50 »5S	PST 65-2S0/J70	PS6S-25O/J7O	PSM 6S-2«yP0	YB-2O0Q237kw	49CN-58HP	PV 12ш12/SSHP
7S0	8	P£DJ75<V8-75-75-7S	PST80-2S0/W)	PS 80250/550	(9) 8O2SVS50	YE3-25OM.2-5SIMr	490Z7SW	PV 12xI7/7.SHP
1000		WDI1000/8-W0 99 10	PST 100-25V7SO	P$ 100-25V750	PSM 100-25(^750	YU-28OS-2-7Skw	4102ZWHP	PV »x7/10HP
1250		Pm）1250/S-IS0-I»-10	-	PS 125^50/1100	wm i2S2s（ynoo	YB31S$-2-U0Icw	6102Q-13CHP	PV 30«7ACHP
SOO		P£W$00/U>60-6175	-	PS6$-315/«O	PSM 6S-31S/450	YB-225M^2-4»cw	49O61HP	PV 12xI7/7.SHP
7S0	10	P€DI75（yiOWO<9^10	-	PS8O31S/7S0	PSM8O-11V7S0	YE328O$>2-75kw	41Q2Z99HP	PV 3O«7A0HP
1000		PWJ1000/1012SU342	-	PS 100-315^900	PSM 100-315*900	YB-280^2-90kw	4108Z-113HP	PV 30«9/12HP
12S0		PH>I125（M1O-130-170-15	-	PS 125-315/1320	PSM US00 1320	YB-31SM-2-132itw	6102ZS17CHP	PV 30xII/ISHP
SOO		Ptwwyi3-100-9942	-	PS65-31S/75O	PSM 格315/750	YU-28OS-2-75kw	4102Z-99HP	PV »«9A2HP
750		PEQJ7S0/B12S11312	-	PS 的31S/90O	PSM8M1VSOO	YB-28OI^2-90Icw	4108Z-113HP	PV 30x9A2HP
1000	13	PtDJIOOOA 3-150130 15	-	PS100315A100	PSM 10O-31S<U00	YB315$-2110icw	6102Q130HP	PV XxIVISHP
12S0		ra»125（m 抓 1704S	-	PS 12^31^1600	WM 12S31V1600	YEMISU-2460kw	6102ZS-170HP	W »xII/15HP
1S00		pa>ii5ayi3-220-i70.i5	-	f>S12S-3iyi«00	PSM 125*31^1600	YE>31SU-2460kw	G102ZS-170HP	PV »xIV15HP

Other sizes can provide on request ***/Bojo ptdkio otrot modtfot diponiblt.***

TECHNICAL DATA

50/60 Hz n=2900/3500 1/min

GPM	Bar	Pump for diesel 2900rpm	Pump for electric 3500rpm	Motor pump 3500rpm
80	7	PS32-250/75	PS32-200/75	PST32-200/75
100	7	PS32-250/75	PS32-200/75	PST32-200/75
120	7	PS32-250/75H	PS32-200/75H	PST32-200/75D
150	7	PS40-250/110	PS40-200/110	PST40-200/110
200	7	PS40-250/150	PS40-200/150	PST40-200/150
250	7	PS50-250/185	PS50-200/185	PST50-200/185
300	7	PS50-250/220	PS50-200/220	PST5O-2OO/22O
350	7	PS50-250/220	PS50-200/220	PST5O-2OO/22O
400	7	PS65-250/300	PS65-200/300	PST65-200/300
500	7	PS6S-250/300	PS65-200/300	PST65-200/300
500	8	PS65-250/370	PS65-200/370	PST65-200/370
500	9	PS65-315/370	PS65-250/370	-
500	10	PS65-315/450	PS65-250/450	-
500	11	PS65-315/550	PS65-250/550	-
500	12	PS65-315/750	PS65-250/750	-
500	13	PS65-315/750	PS65-250/750	■
750	7	PS80-250/450	PS80-200/450	PST80-200/450
750	8	PS80-250/S50	PS80-200/550	PST80-200/550
750	9	PS80-315/750	PS80-250/750	垂
750	10	PS80-315/750	PS80-250/750	-
750	11	PS80-315/750	PS80-250/750	垂
750	12	PS80-315/900	PS80-250/900	霧
750	13	PS80-315/900	PS80-250/900	-
1000	7	PS1OO-25O/55O	PS1OO-2OO/55O	PST100-200/550
1000	8	PS100-250/750	PS100-200/750	PST100-200/750
1000	9	PS1OO-315/75O	PS100-250/750	-
1000	10	PS1OO-315/9OO	PS100-250/900	垂
1000	11	PS100-315/900	PS100-250/900	-
1000	12	PS1OO-315/11OO	PS100-250/1100	-
1000	13	PS1OO-315/11OO	PS100-250/1100	垂
1000	14	PSC80-370A1/1320	PSC80-370A1/1320	-
1000	15	PSC80-370A1/1320	PSC80-370A1/1320	-
1250	7	PS125-25O/9OO	PS125-200/900	-
1250	8	PS125-250/1100	PS125-200/1100	-
1250	9	PS125-315/1100	PS125-25O/11OO	■
1250	10	PS125-315/1320	PS125-250/1320	-
1250	11	PS125-315/1320	PS125-250/1320	噴
1250	12	PS125-315/1600	PS125-25O/16OO	-
1250	13	PS125-315/1600	PS125-250/1600	-

GPM	Bar	Pump for diesel 2900rpm	Pump for electric 3500rpm	Motor pump 3500rpm
1250	14	PSC100-375A2/2000	PSC100-375A2/2000	-
1250	15	PSC100-375A2/2000	PSC100-375A2/2000	-
1250	17	PSC100-375B1/2500	PSC100-375B1/2500	-
1500	8	PS125-250/1100	PS125-200/1100	-
1500	9	PS125-315/1100	PS125-250/1100	-
1500	10	PS125-315/1320	PS125-250/1320	-
1500	11	PS125-315/1320	PS125-250/1320	-
1500	12	PS125-315/1600	PS125-250/1600	-
1500	13	PS125-315/1600	PS125-250/1600	-
1500	15	PSC100-375B1/2500	PSC100-375B1/2500	-
1500	18	PSC100-375A1/2500	PSC1OO-375A1/25OO	-
2000	8	PS150-250/1600	PS150-200/1600	-
2000	10	PS150-315/2000	PS150-250/2000	-
2000	11	PSC125-290A1/2000	PSC125-290A1/2000	-
2000	12	PSC125-365A3/2500	PSC125-365A3/25OO	-
2000	13	PS15O-315/25OO	PS15O-25O/25OO	-
2000	15	PSC125-365A2/3150	PSC125-365A2/3150	-
2000	17	PSC125-365B1/3550	PSC125-365B1/355O	-
2500	8	PS150-250/1600	PS150-200/1600	-
2500	10	PS150-315/2000	PS150-250/2000	-
2500	12	PS15O-315/25OO	PS150-250/2500	-
2500	13	PSC150-460B2/3150	PSC150^60B2/3150	-
2500	15	PSC125-365A2/3550	PSC125-365A2/3550	-
2500	17	PSC125-365BV3550	PSC125-365B1/355O	-
3000	10	PSC15O-36OA3/25OO	PSC15O-36OA3/25OO	-
3000	12	PSC150-360A2/3550	PSC15O-36OA2/355O	-
3000	13	PSC150^60B2/3550	PSC150-460B2/3550	-
3000	14	PSC150-360B1/4000	PSC150-360B1/4000	-
3000	16	PSC1SCM60B1/4500	PSC150-460BV4500	-
4000	11	PSC200-420B3/4000	PSC200-420B3/4000	-
4000	14	PSC200-420B2/5000	PSC200-420B2/5000	-
4000	15	PSC150-360A1/5000	PSC15O-36OA1/5OOO	-
4000	17	PSC150-460AV5600	PSC150-460A1/5600	-
5000	10	PSC200-320B2/4000	PSC200-320B2/4000	-
5000	11	PSC200-320B1/5000	PSC200-320BV5000	-
5000	12	PSC200-320A1/5600	PSC200-320A1/5600	-
5000	14	PSC200-420A2/5600	PSC200420A2/5600	-
5000	16	PSC20CM20B1/7100	PSC200^20BI/7100	-
5000	17	PSC200-420AV8000	PSC20CM20A1/8000	-

Other sizes can provide on request.

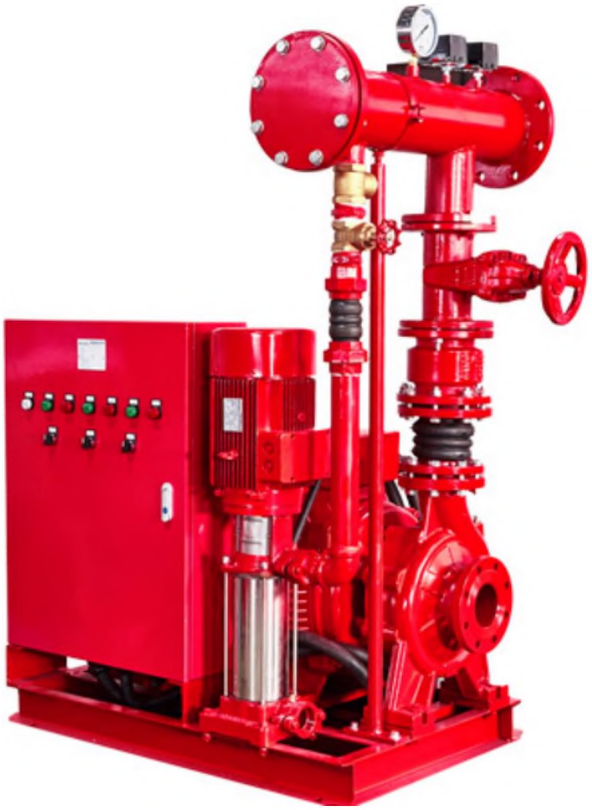

Fire Pump System PEJ

PEJ Fire Pump System Multistage Jockey Pump and End Suction Centrifugal Pump

TECHNICAL DESCRIPTION

- Original design by PURITY
- Both square motor & round motor available
- YE3 high efficient motor, with protection IP55 class F

-Pump case with anti-corrosive coating

- Impeller in techno-polimer
- Shaft in stainless steel AISI 304 or galvanized iron
- Suction and discharge port in cast iron G20 thread
- Quality NSK bearing, wear resistance mechanical seal

Product Specification (50HZ)

PEJ Fire Pump System
Multistage Jockey Pump + End Suction Centrifugal Pump+Control Panel Board

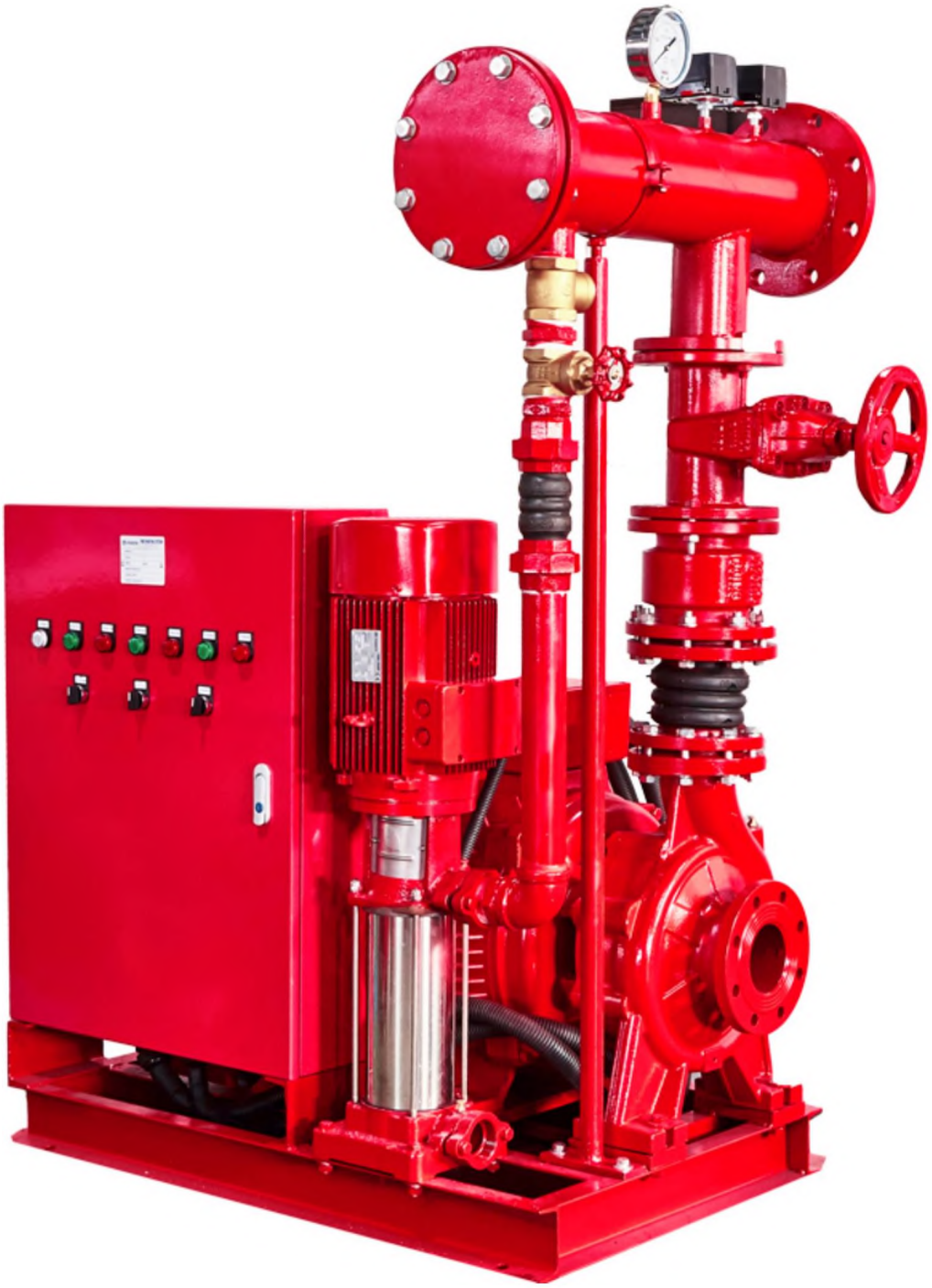

End Suction Horizontal Centrifugal Fire Pump

Vertical Multistage Jockey Fire Pump

Control Panel Board

NEW/NUEVO

TECHNICAL DESCRIPTION

-New vertical multistage centrifugal pump
-Original design by PURITY
■ Both square motor & round motor available
-YE3 high efficient motor, with protection IP55 class F
-Pump case with anti-corrosive coating
• Impeller in techno-polimer

- Shaft in stainless steel AISI 304 or galvanized iron
- Suction and discharge port in cast iron G20 thread
- Quality NSK bearing, wear resistance mechanical seal

USING LIMITS

- Liquid temperature between -10°C and +120°C
- Ambient temperature up to +50°C
- Max. working pressure 25 bar
- Continuous service S1

APPLICATIONS

- Suitable for use with clean water and liquids that are not chemically aggressive towards the materials from which the pump is made. The high efficiency and adaptability of these pumps to even the most unusual of applications, makes them ideal for use in the domestic, civil and industrial sectors; in particular for the distribution of water in combination with pressure sets and for pressure boosting.

TECHNICAL DATA / *DATOS TECNICOS* **50 Hz n=2900 1/min**

MODEL *MODELO*	Power *Potencia*		US	Q=DEUVERY / *CAUDAL*																				DN
			QPm	0	**5**	**11**	13	16	19	21	24	26	29	32	37	42	**4B**	53	5S	63	69	74	79	
			l/min	0	20	40	50	60	70	80	90	**100**	110	120	140	160	**180**	200	220	240	260	280	300	
	kw	hp	m³/h	0	1.2	**2.4**	3	3.6	4.2	4.8	5.4	**6**	6.6	7.2	8.4	9.6	10.8	12	13.2	14.4	15.6	16.8	18	mm
PV 4x7/1.5	1.1	1.5		60.7	56.8	52.1	49	45.9	42.8	38.9	35	30.3	25.7	20.2										25x25
PV 4x9/2	1.5	2		78	73	67	63	59	55	50	45	39	33	26										25x25
PV 4x13/3	22	3		113	105	96.8	91	85.2	79.4	72.2	65	56.3	47.7	37.5										25x25
PV 4x16/4	3	4		139	130	119	112	105	97.8	88.9	80	69.3	58.7	46.2										25x25
PV 6x5/1.5	1.1	1.5		44.4				135.5	33.3	30.9	28.4	26.1	23.4	20.2	14.3	6.8								32x32
PV 6x8/2	1.5	2		71.1				56.7	53.2	49.5	45.5	41.8	37.5	32.4	22.9	10.9								32x32
PV 6x11/3	22	3		97.7				78	73.2	68	62.5	57.5	51.5	44.5	31.5	15								32x32
PV 6x15/4	3	4		133				106	99.8	92.7	85.2	78.4	702	60.7	43	20.5								32x32
PV8x4/1.5	1.1	1.5		36.8						30	28.4	27.2	26	24.4	21.2	17.6	13.2	9.2	4.8					40x40
PV 8x7/2	1.5	2	H(m)	64.4						52.5	49.7	47.6	45.5	42.7	37.1	30.8	23.1	16.1	8.4					40x40
PV 8x9/3	22	3		82.8						67.5	63.9	61.2	58.5	54.9	47.7	39.6	29.7	20.7	10.8					40x40
PV 8x12/4	3	4		110						90	85.2	81.6	78	73.2	63.6	52.8	39.6	27.6	14.4					40x40
PV 8x16/5.5	4	5.5		147						120	114	109	104	97.6	84.8	70.4	52.8	36.8	19.2					40x40
PV 12x3/1.5	1.1	1.5		31								25.4	24.7	24	22.4	20.6	18.4	16.2	13.3	10.9	8.3	5.1	2	50x50
PV 12x5/2	1.5	2		51.7								42.4	412	40	37.3	34.3	30.7	27	22.2	18.2	13.8	8.5	3.3	50x50
PV 12x7/3	22	3		72.3								59.3	57.6	56	52.3	48.1	43	37.8	31	25.5	19.4	11.9	4.7	50x50
PV 12x9/4	3	4		93								76.2	74.1	72	67.2	61.8	55.2	48.6	39.9	32.8	24.9	15.4	6	50x50
PV 12x12/5.5	4	5.5		122								102	98.8	96	89.6	82.4	73.6	64.8	53.2	43.8	33.2	20.5	8	50x50
PV 12x17/7.5	5.5	7.5		176								144	140	136	127	117	104	91.8	75.4	62	47	29	11.3	50x50

MODEL *MODELO*	Power *Potencia*		US	Q=DELIVERY/GA£/DZZ.									DN
			gpm	0	26	**53**	79	106	132	159	185	211	
			l/min	0	100	200	**300**	400	500	600	**700**	800	
	kw	hp	**m³/h**	0	6	**12**	18	24	30	36	**42**	48	mm
PV 30x7/10	7.5	10		104	100	93	83	74	64	49	31	4	50x50
PV 30x9/12	92	12.5	**H(m)**	133	128	119	108	96	82	63	40	5	65x65
PV 30x11/15	11	15		163	156	145	132	116	99	77	48	6	

PERFORMANCE CURVE / *CURVAS DEFUNCIONAMIENTO*

SO Hz n=29001/min

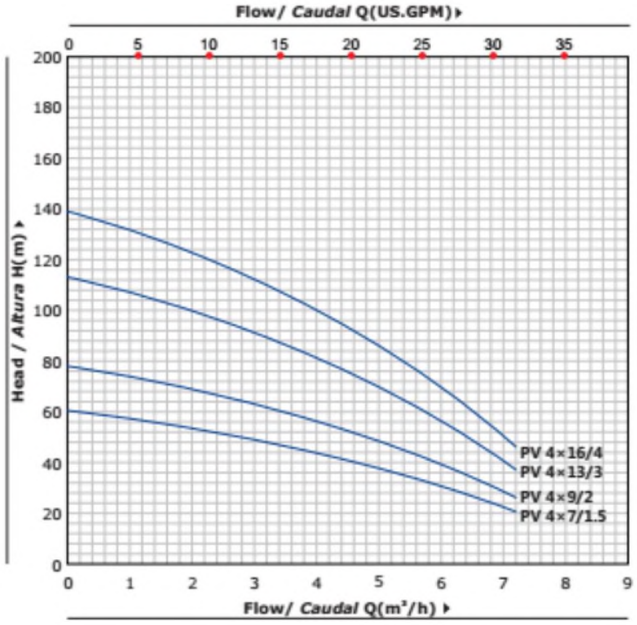

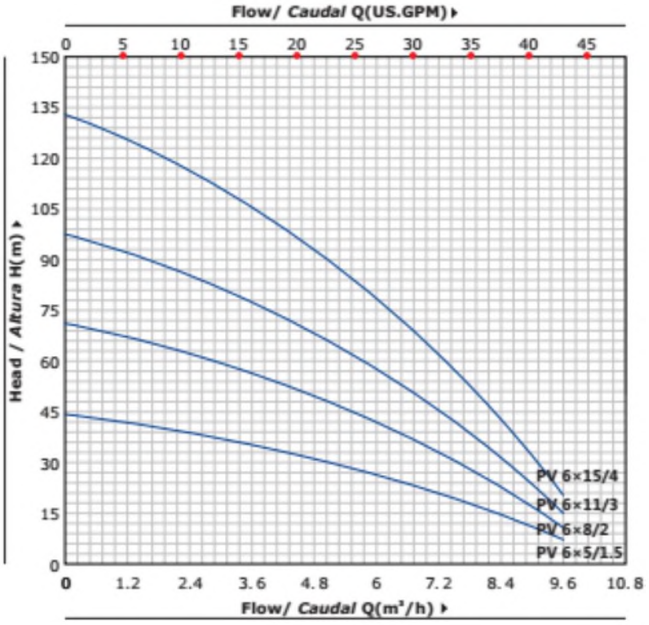

PERFORMANCE CURVE / *CURVAS DE FUNCIONAMIENTO*

SO Hz n=29001/min

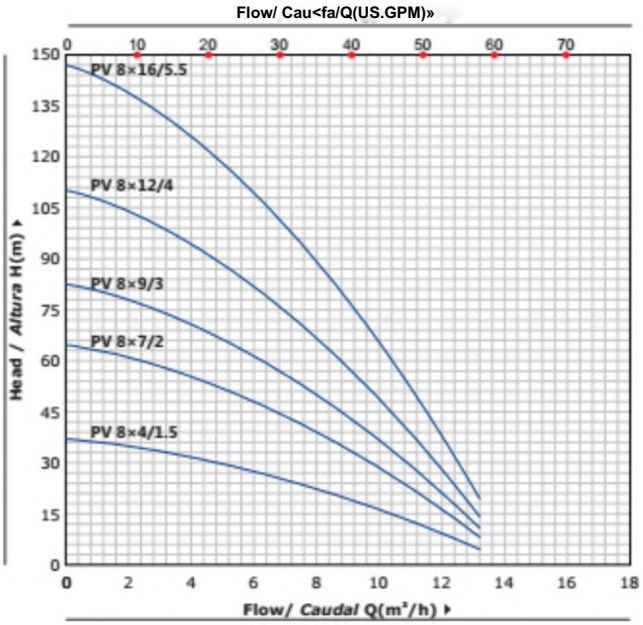

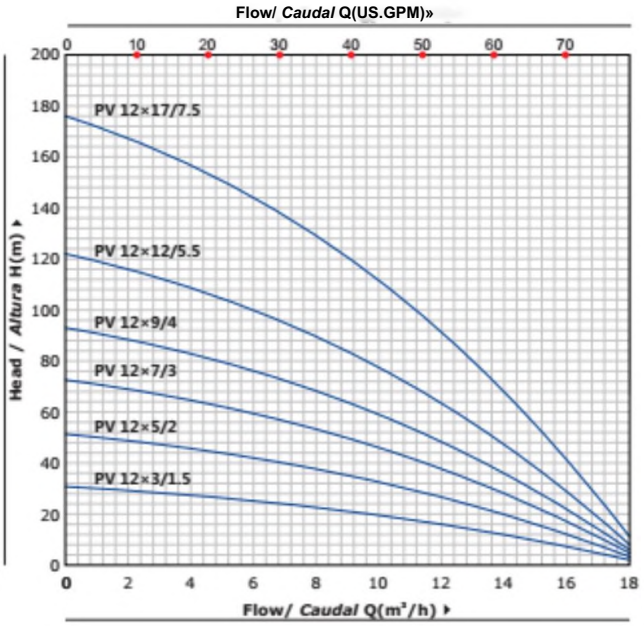

MODEL *MODELO*	DIMEN SION S / *DIMENSIONES* mm															ka	
	DN1	DN2	**N**	a	s	h	hi	h2	w1	w2	n1	n2	n3	n4	d	⊢	**3-**
PV 4x7/1.5	25/32	25/32	7	141	141	720	45.5	261.5	165	165	202	202	175	175	12	**28.0**	**27.0**
PV 4x9/2	25/32	25/32	9	141	141	790	45.5	331.5	165	165	202	202	175	175	12	**33.0**	**32.0**
PV 4x13/3	25/32	25/32	13	141	141	930	45.5	471.5	165	165	202	202	175	175	12	**38.0**	**37.0**
PV 4x16/4	25/32	25/32	16	141	141	1082	45.5	576.5	165	165	202	202	195	195	12	**48.0**	**47.0**
PV6x5/1.5	25/32	25/32	5	141	141	650	45.5	191.5	165	165	202	202	175	175	12	**26.0**	**25.0**
PV 6x8/2	25/32	25/32	8	141	141	755	45.5	296.5	165	165	202	202	175	175	12	**31.0**	**30.0**
PV6x11/3	25/32	25/32	11	141	141	860	45.5	401.5	165	165	202	202	175	175	12	**36.0**	**35.0**
PV 6x15/4	25/32	25/32	15	141	141	1047	45.5	541.5	165	165	202	202	195	195	12	**46.0**	**45.0**
PV8x4/1.5	40/50	40/50	4	141	141	615	45.5	156.5	165	165	202	202	175	175	12	**26.0**	**25.0**
PV 8x7/2	40/50	40/50	7	141	141	720	45.5	261.5	165	165	202	202	175	175	12	**31.0**	**30.0**
PV 8x9/3	40/50	40/50	9	141	141	790	45.5	331.5	165	165	202	202	175	175	12	**36.0**	**35.0**
PV 8x12/4	40/50	40/50	12	141	141	942	45.5	436.5	165	165	202	202	195	195	12	**46.0**	**45.0**
PV 8x16/5.5	40/50	40/50	16	141	141	1082	45.5	576.5	165	165	202	202	195	195	12	**-**	**50.0**
PV 12x3/1.5	40/50	40/50	3	141	141	580	45.5	121.5	165	165	202	202	175	175	12	**25.0**	**24.0**
PV 12x5/2	40/50	40/50	5	141	141	650	45.5	191.5	165	165	202	202	175	175	12	**30.0**	**29.0**
PV 12x7/3	40/50	40/50	7	141	141	720	45.5	261.5	165	165	202	202	175	175	12	**35.0**	**34.0**
PV 12x9/4	40/50	40/50	9	141	141	837	45.5	331.5	165	165	202	202	195	195	12	**45.0**	**44.0**
PV 12x12/5.5	40/50	40/50	12	141	141	942	45.5	436.5	165	165	202	202	195	195	12	-	**50.0**
PV 12x17/7.5	40/50	40/50	17	141	141	1167	45.5	611.5	165	165	202	202	204	204	12	-	**60.0**
PV 30x7/10	50/65	50/65	7	170	170	1046	62	416	187	187	230	230	260	260	12	-	**86.0**
PV 30x9/12	50/65	50/65	9	170	170	1153	62	523	187	187	230	230	260	260	12	-	**92.0**
PV 30x11/15	50/65	50/65	11	170	170	1260	62	630	187	187	230	230	260	260	12	-	**100**

Product Specification (60HZ)

PEJ Fire Pump System
Multistage Jockey Pump + End Suction Centrifugal Pump+Control Panel Board

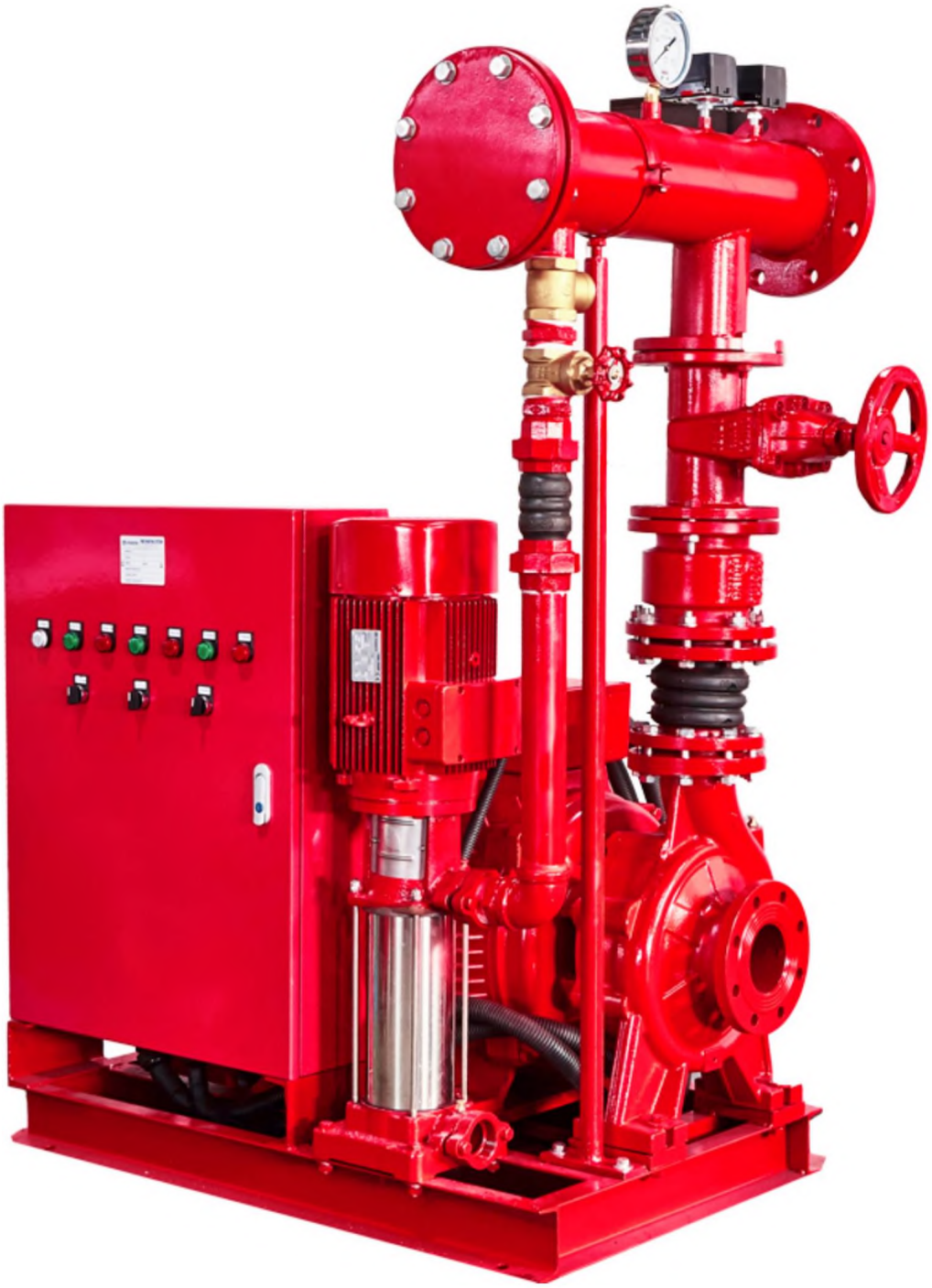

End Suction Horizontal Centrifugal Fire Pump

Vertical Multistage Jockey Fire Pump

Control Panel Board

NEW/NUEVO

TECHNICAL DESCRIPTION

-New vertical multistage centrifugal pump
-Original design by PURITY
■ Both square motor & round motor available
-YE3 high efficient motor, with protection IP55 class F
-Pump case with anti-corrosive coating
• Impeller in techno-polimer

- Shaft in stainless steel AISI 304 or galvanized iron
- Suction and discharge port in cast iron G20 thread
- Quality NSK bearing, wear resistance mechanical seal

USING LIMITS

- Liquid temperature between -10°C and +120°C
- Ambient temperature up to +50°C
- Max. working pressure 25 bar
- Continuous service S1

APPLICATIONS

- Suitable for use with clean water and liquids that are not chemically aggressive towards the materials from which the pump is made. The high efficiency and adaptability of these pumps to even the most unusual of applications, makes them ideal for use in the domestic, civil and industrial sectors; in particular for the distribution of water in combination with pressure sets and for pressure boosting.

TECHNICAL DATA / *DATOS TECNICOS* **50 Hz n=2900 1/min**

MODEL *MODELO*	Power *Potencia*		US	Q=DEUVERY / *CAUDAL*																				DN
			QPm	0	**5**	**11**	13	16	19	21	24	26	29	32	37	42	**4B**	53	5S	63	69	74	79	
			l/min	0	20	40	50	60	70	80	90	**100**	110	120	140	160	**180**	200	220	240	260	280	300	
	kw	hp	m³/h	0	1.2	**2.4**	3	3.6	4.2	4.8	5.4	**6**	6.6	7.2	8.4	9.6	10.8	12	13.2	14.4	15.6	16.8	18	mm
PV 4x7/1.5	1.1	1.5		60.7	56.8	52.1	49	45.9	42.8	38.9	35	30.3	25.7	20.2										25x25
PV 4x9/2	1.5	2		78	73	67	63	59	55	50	45	39	33	26										25x25
PV 4x13/3	22	3		113	105	96.8	91	85.2	79.4	72.2	65	56.3	47.7	37.5										25x25
PV 4x16/4	3	4		139	130	119	112	105	97.8	88.9	80	69.3	58.7	46.2										25x25
PV 6x5/1.5	1.1	1.5		44.4				135.5	33.3	30.9	28.4	26.1	23.4	20.2	14.3	6.8								32x32
PV 6x8/2	1.5	2		71.1				56.7	53.2	49.5	45.5	41.8	37.5	32.4	22.9	10.9								32x32
PV 6x11/3	22	3		97.7				78	73.2	68	62.5	57.5	51.5	44.5	31.5	15								32x32
PV 6x15/4	3	4		133				106	99.8	92.7	85.2	78.4	702	60.7	43	20.5								32x32
PV8x4/1.5	1.1	1.5		36.8						30	28.4	27.2	26	24.4	21.2	17.6	13.2	9.2	4.8					40x40
PV 8x7/2	1.5	2	H(m)	64.4						52.5	49.7	47.6	45.5	42.7	37.1	30.8	23.1	16.1	8.4					40x40
PV 8x9/3	22	3		82.8						67.5	63.9	61.2	58.5	54.9	47.7	39.6	29.7	20.7	10.8					40x40
PV 8x12/4	3	4		110						90	85.2	81.6	78	73.2	63.6	52.8	39.6	27.6	14.4					40x40
PV 8x16/5.5	4	5.5		147						120	114	109	104	97.6	84.8	70.4	52.8	36.8	19.2					40x40
PV 12x3/1.5	1.1	1.5		31								25.4	24.7	24	22.4	20.6	18.4	16.2	13.3	10.9	8.3	5.1	2	50x50
PV 12x5/2	1.5	2		51.7								42.4	412	40	37.3	34.3	30.7	27	22.2	18.2	13.8	8.5	3.3	50x50
PV 12x7/3	22	3		72.3								59.3	57.6	56	52.3	48.1	43	37.8	31	25.5	19.4	11.9	4.7	50x50
PV 12x9/4	3	4		93								76.2	74.1	72	67.2	61.8	55.2	48.6	39.9	32.8	24.9	15.4	6	50x50
PV 12x12/5.5	4	5.5		122								102	98.8	96	89.6	82.4	73.6	64.8	53.2	43.8	33.2	20.5	8	50x50
PV 12x17/7.5	5.5	7.5		176								144	140	136	127	117	104	91.8	75.4	62	47	29	11.3	50x50

MODEL *MODELO*	Power *Potencia*		US	Q=DELIVERY/GA£/DZZ.									DN
			gpm	0	26	**53**	79	106	132	159	185	211	
			l/min	0	100	200	**300**	400	500	600	**700**	800	
	kw	hp	**m³/h**	0	6	**12**	18	24	30	36	**42**	48	mm
PV 30x7/10	7.5	10		104	100	93	83	74	64	49	31	4	50x50
PV 30x9/12	92	12.5	**H(m)**	133	128	119	108	96	82	63	40	5	65x65
PV 30x11/15	11	15		163	156	145	132	116	99	77	48	6	

PERFORMANCE CURVE / *CURVAS DEFUNCIONAMIENTO*

SO Hz n=29001/min

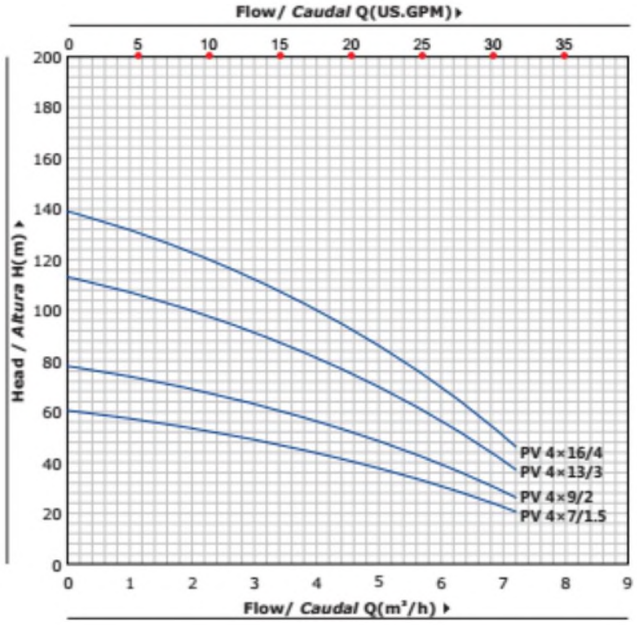

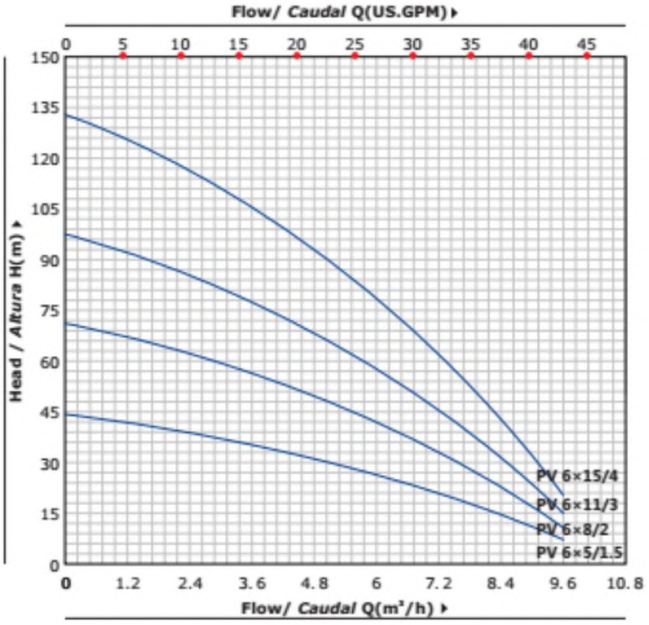

PERFORMANCE CURVE / *CURVAS DE FUNCIONAMIENTO*

SO Hz n=29001/min

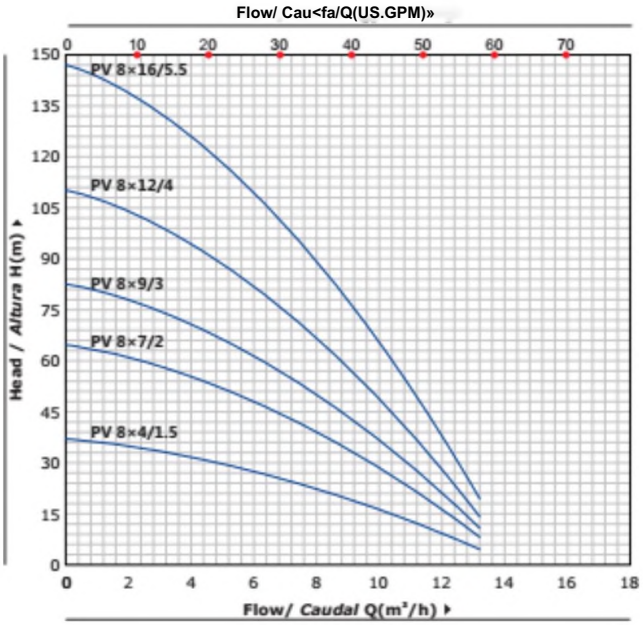

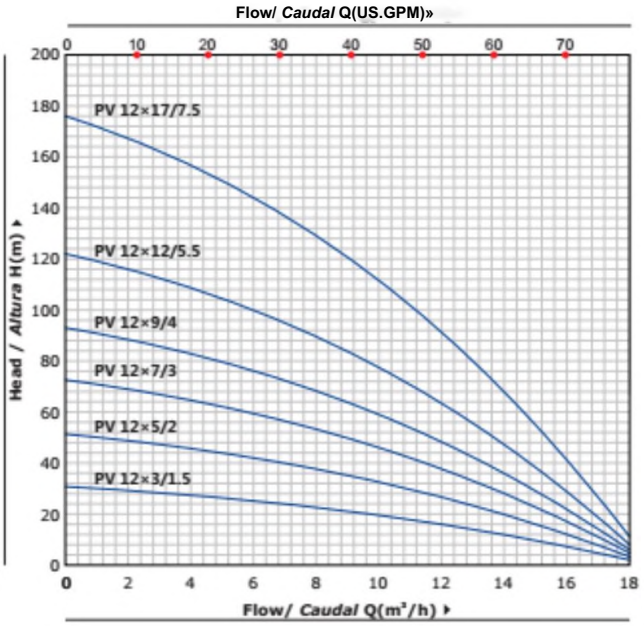

MODEL *MODELO*	DIMEN SION S / *DIMENSIONES* mm															ka	
	DN1	DN2	**N**	a	s	h	hi	h2	w1	w2	n1	n2	n3	n4	d	⊢	**3-**
PV 4x7/1.5	25/32	25/32	7	141	141	720	45.5	261.5	165	165	202	202	175	175	12	**28.0**	**27.0**
PV 4x9/2	25/32	25/32	9	141	141	790	45.5	331.5	165	165	202	202	175	175	12	**33.0**	**32.0**
PV 4x13/3	25/32	25/32	13	141	141	930	45.5	471.5	165	165	202	202	175	175	12	**38.0**	**37.0**
PV 4x16/4	25/32	25/32	16	141	141	1082	45.5	576.5	165	165	202	202	195	195	12	**48.0**	**47.0**
PV6x5/1.5	25/32	25/32	5	141	141	650	45.5	191.5	165	165	202	202	175	175	12	**26.0**	**25.0**
PV 6x8/2	25/32	25/32	8	141	141	755	45.5	296.5	165	165	202	202	175	175	12	**31.0**	**30.0**
PV6x11/3	25/32	25/32	11	141	141	860	45.5	401.5	165	165	202	202	175	175	12	**36.0**	**35.0**
PV 6x15/4	25/32	25/32	15	141	141	1047	45.5	541.5	165	165	202	202	195	195	12	**46.0**	**45.0**
PV8x4/1.5	40/50	40/50	4	141	141	615	45.5	156.5	165	165	202	202	175	175	12	**26.0**	**25.0**
PV 8x7/2	40/50	40/50	7	141	141	720	45.5	261.5	165	165	202	202	175	175	12	**31.0**	**30.0**
PV 8x9/3	40/50	40/50	9	141	141	790	45.5	331.5	165	165	202	202	175	175	12	**36.0**	**35.0**
PV 8x12/4	40/50	40/50	12	141	141	942	45.5	436.5	165	165	202	202	195	195	12	**46.0**	**45.0**
PV 8x16/5.5	40/50	40/50	16	141	141	1082	45.5	576.5	165	165	202	202	195	195	12	**-**	**50.0**
PV 12x3/1.5	40/50	40/50	3	141	141	580	45.5	121.5	165	165	202	202	175	175	12	**25.0**	**24.0**
PV 12x5/2	40/50	40/50	5	141	141	650	45.5	191.5	165	165	202	202	175	175	12	**30.0**	**29.0**
PV 12x7/3	40/50	40/50	7	141	141	720	45.5	261.5	165	165	202	202	175	175	12	**35.0**	**34.0**
PV 12x9/4	40/50	40/50	9	141	141	837	45.5	331.5	165	165	202	202	195	195	12	**45.0**	**44.0**
PV 12x12/5.5	40/50	40/50	12	141	141	942	45.5	436.5	165	165	202	202	195	195	12	-	**50.0**
PV 12x17/7.5	40/50	40/50	17	141	141	1167	45.5	611.5	165	165	202	202	204	204	12	-	**60.0**
PV 30x7/10	50/65	50/65	7	170	170	1046	62	416	187	187	230	230	260	260	12	-	**86.0**
PV 30x9/12	50/65	50/65	9	170	170	1153	62	523	187	187	230	230	260	260	12	-	**92.0**
PV 30x11/15	50/65	50/65	11	170	170	1260	62	630	187	187	230	230	260	260	12	-	**100**

Fire Pump System PET

PET Multistage Jockey Pump with Air Pressure Tank

TECHNICAL DESCRIPTION

- New vertical multistage centrifugal pump
- Original design by PURITY
- Both square motor & round motor available
- YE3 high efficient motor, with protection IP55 class F

-Pump case with anti-corrosive coating

- Impeller in techno-polimer
- Shaft in stainless steel AISI 304 or galvanized iron
- Suction and discharge port in cast iron G20 thread
- Quality NSK bearing, wear resistance mechanical seal

Product Specification (50HZ)

NEW/NUEVO

TECHNICAL DESCRIPTION

-New vertical multistage centrifugal pump
-Original design by PURITY
■ Both square motor & round motor available
-YE3 high efficient motor, with protection IP55 class F
-Pump case with anti-corrosive coating
• Impeller in techno-polimer
■ Shaft in stainless steel AISI 304 or galvanized iron
■ Suction and discharge port in cast iron G20 thread
• Quality NSK bearing, wear resistance mechanical seal

USING LIMITS

■ Liquid temperature between -10°C and +120°C
■ Ambient temperature up to +50°C
■ Max. working pressure 25 bar
■ Continuous service S1

APPLICATIONS

■ Suitable for use with clean water and liquids that are not chemically aggressive towards the materials from which the pump is made. The high efficiency and adaptability of these pumps to even the most unusual of applications, makes them ideal for use in the domestic, civil and industrial sectors; in particular for the distribution of water in combination with pressure sets and for pressure boosting.

TECHNICAL DATA / *DATOS TECNICOS*

50 Hz n=2900 1/min

MODEL *MODELO*	Power *Potencia*		US	Q=DEUVERY / *CAUDAL*																				DN
			QPm	0	5	**11**	13	16	19	21	24	26	29	32	37	42	4B	53	5S	63	69	74	79	
			l/min	0	20	**40**	**50**	60	70	80	90	100	110	120	**140**	160	180	200	220	240	260	280	300	
	kw	hp	m³/h	0	1.2	**2.4**	3	3.6	4.2	4.8	5.4	**6**	6.6	7.2	8.4	9.6	10.8	12	13.2	14.4	15.6	16.8	18	mm
PV 4x7/1.5	1.1	1.5		60.7	56.8	52.1	49	45.9	42.8	38.9	35	30.3	25.7	20.2										25x25
PV 4x9/2	1.5	2		78	73	67	63	59	55	50	45	39	33	26										25x25
PV 4x13/3	22	3		113	105	96.8	91	85.2	79.4	72.2	65	56.3	47.7	37.5										25x25
PV 4x16/4	3	4		139	130	119	112	105	97.8	88.9	80	69.3	58.7	46.2										25x25
PV 6x5/1.5	1.1	1.5		44.4				135.5	33.3	30.9	28.4	26.1	23.4	20.2	14.3	6.8								32x32
PV 6x8/2	1.5	2		71.1				56.7	53.2	49.5	45.5	41.8	37.5	32.4	22.9	10.9								32x32
PV 6x11/3	22	3		97.7				78	73.2	68	62.5	57.5	51.5	44.5	31.5	15								32x32
PV 6x15/4	3	4		133				106	99.8	92.7	85.2	78.4	702	60.7	43	20.5								32x32
PV8x4/1.5	1.1	1.5		36.8						30	28.4	27.2	26	24.4	21.2	17.6	13.2	9.2	4.8					40x40
PV 8x7/2	1.5	2	**H(m)**	64.4						52.5	49.7	47.6	45.5	42.7	37.1	30.8	23.1	16.1	8.4					40x40
PV 8x9/3	22	3		82.8						67.5	63.9	61.2	58.5	54.9	47.7	39.6	29.7	20.7	10.8					40x40
PV 8x12/4	3	4		110						90	85.2	81.6	78	73.2	63.6	52.8	39.6	27.6	14.4					40x40
PV 8x16/5.5	4	5.5		147						120	114	109	104	97.6	84.8	70.4	52.8	36.8	19.2					40x40
PV 12x3/1.5	1.1	1.5		31								25.4	24.7	24	22.4	20.6	18.4	16.2	13.3	10.9	8.3	5.1	2	50x50
PV 12x5/2	1.5	2		51.7								42.4	412	40	37.3	34.3	30.7	27	22.2	18.2	13.8	8.5	3.3	50x50
PV 12x7/3	22	3		72.3								59.3	57.6	56	52.3	48.1	43	37.8	31	25.5	19.4	11.9	4.7	50x50
PV 12x9/4	3	4		93								76.2	74.1	72	67.2	61.8	55.2	48.6	39.9	32.8	24.9	15.4	6	50x50
PV 12x12/5.5	4	5.5		122								102	98.8	96	89.6	82.4	73.6	64.8	53.2	43.8	33.2	20.5	8	50x50
PV 12x17/7.5	5.5	7.5		176								144	140	136	127	117	104	91.8	75.4	62	47	29	11.3	50x50

MODEL *MODELO*	Power *Potencia*		US	Q=DELIVERY/GA£/DZZ.									DN
			gpm	0	26	53	79	106	132	159	185	211	
			l/min	0	100	200	**300**	400	500	600	**700**	800	
	kw	hp	m³/h	0	6	12	18	24	30	36	42	48	mm
PV 30x7/10	7.5	10		104	100	93	83	74	64	49	31	4	
PV 30x9/12	92	12.5	**H(m)**	133	128	119	108	96	82	63	40	5	50x50
PV 30x11/15	11	15		163	156	145	132	116	99	77	48	6	65x65

PERFORMANCE CURVE / *CURVAS DEFUNOONAMIENTO*

50 Hz n=2900 1 /min

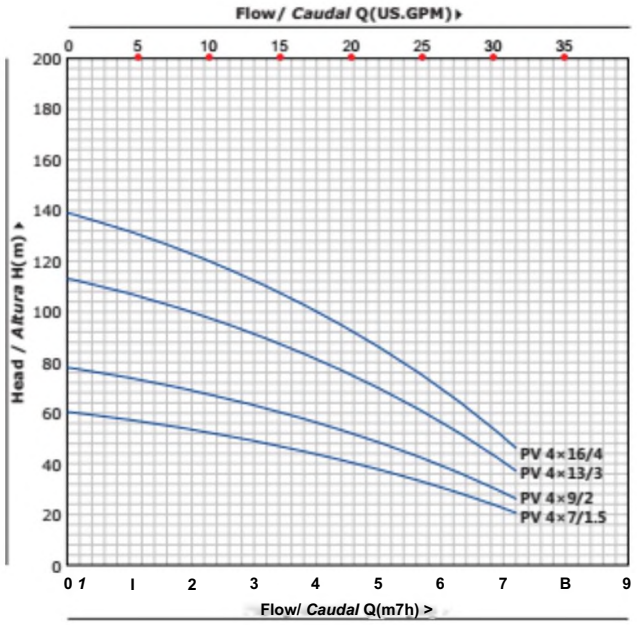

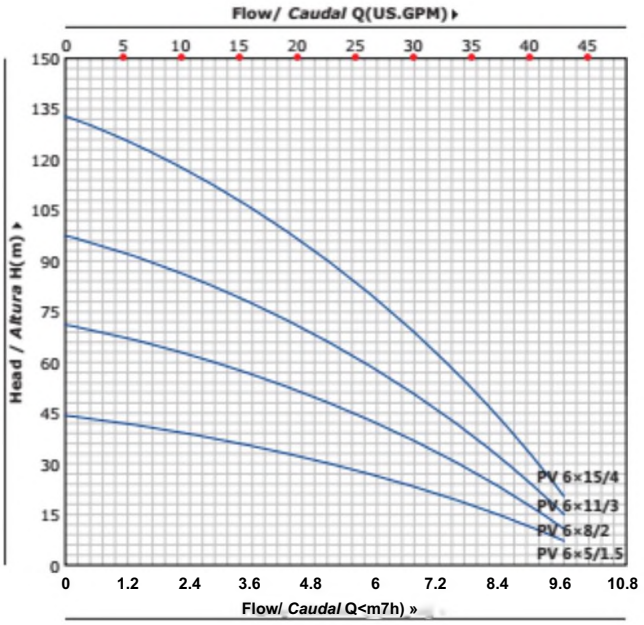

PERFORMANCE CURVE / *CURVAS DE FUNCIONAMIENTO*

50 Hz n=29001/min

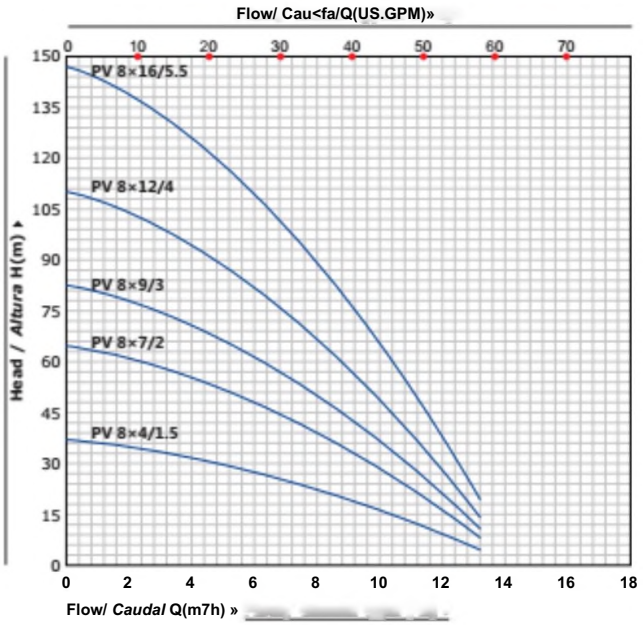

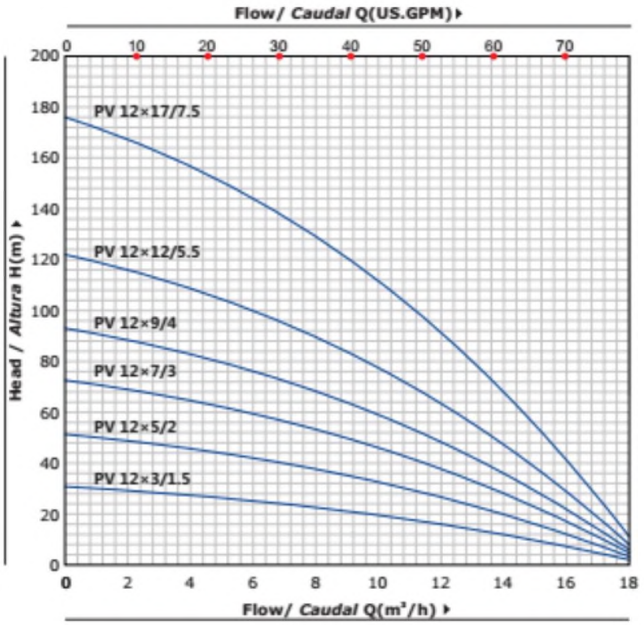

MATERIAL DESCRIPTION / *DESCRIPCIbN DE MATERIAL*

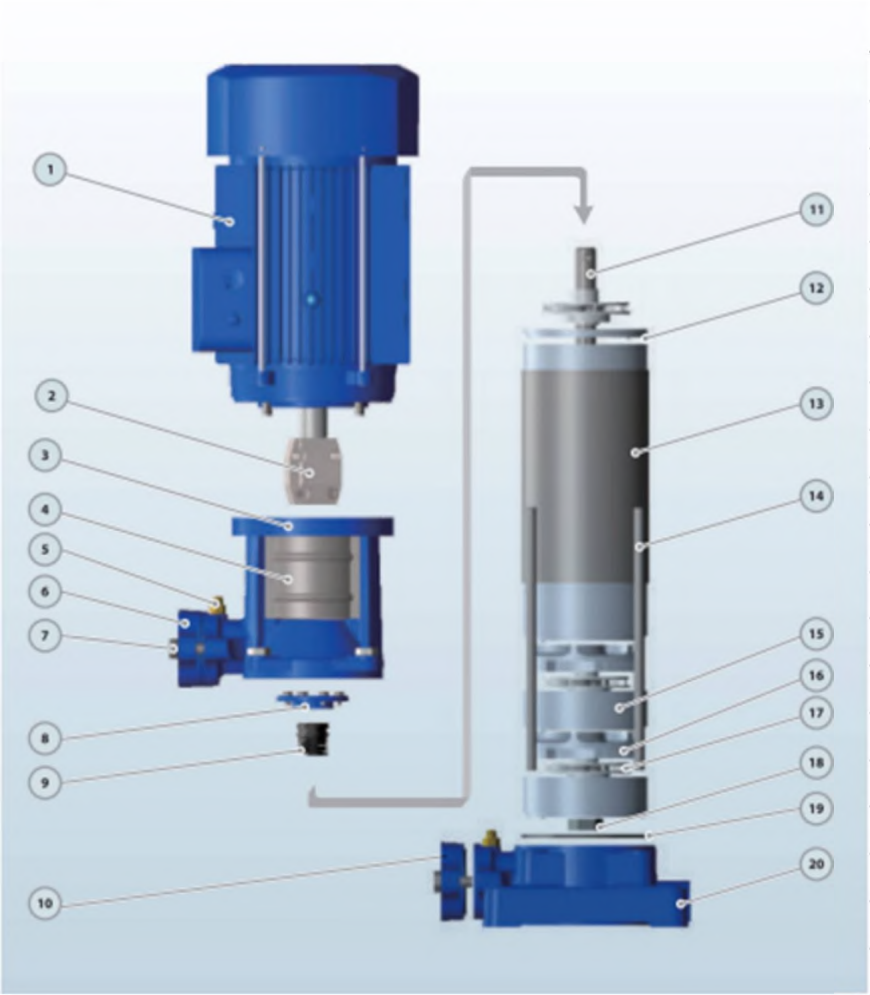

No.	Description *Descrip ción*	Material ***Material***
1	Motor *Motor*	IP55 Class F *IP55ClaseF*
2	Coupling I/nión	Iron *Hierro*
3	Discharge Body *Cuerpo Impulsión*	Cast iron *Fundición*
4	Cover *Taps*	SS304 *Inox 304*
5	Release Valve *Tapón Cebado*	Brass *Bronce*
6	Discharge *Impulsión*	Cast iron *Fundición*
7	Bolt *Pemo*	Steel *Acero*
8	Seal Cover *Tapa Cierre*	Cast iron *Fundición*
9	Mechanical Seal *Ciefre Mecánico*	SiC/Carbon/SS304 *SiC-Grafito-Inox304*
10	Suction *Aspiración*	Cast iron *Fundición*
11	Pump Shaft 印	SS304/45# Iron *Inox 304/45^ hierro*
12	Diffuser Top Cover *Tope Tapa Difusor*	Technopolimer *TecnopoHmero*
13	Pump Cover *Tapa Bomba*	SS304 *Inox 304*
14	Through BoK *Pemo*	Steel *Acero*
15	Diffuser Cover *Tapa Difusor*	Technopolimer with SS304 ring *Tecnopolmero con Inox aniDo*
16	Diffuser *Difusor*	Technopolimer with SS304 ring *TecnopoHmero con Inox aniHo*
17	Impeller *Impufsor*	Technopolimer TecnopoAimefD
18	Impeller Nut *Tuerca de Impulsor*	Galvanized Steel *Acero Galvanizado*
19	O-ring *Junta Tórica*	Rubber Cauc/io
20	Suction Body *Cuerpo Aspiración*	Cast iron *Fundición*

PERFORMANCE CURVE / *CURVAS DEFUNCIONAMIENTO*

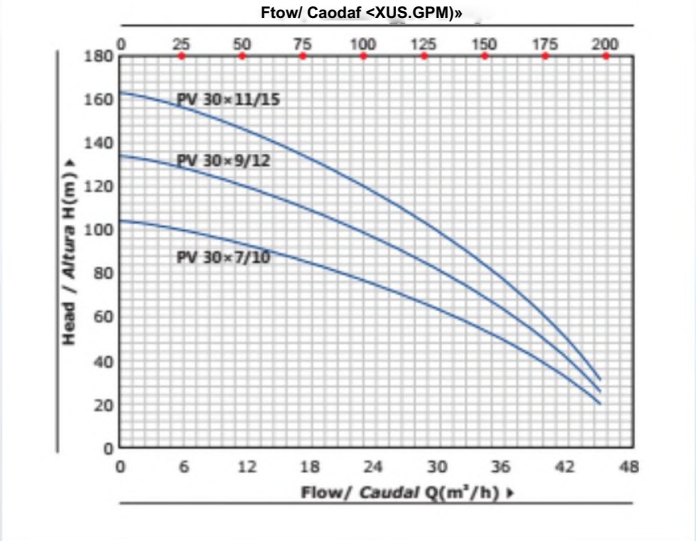

DIMENSIONS AND WEIGHT / *DIMEN^IONES Y PESOS*

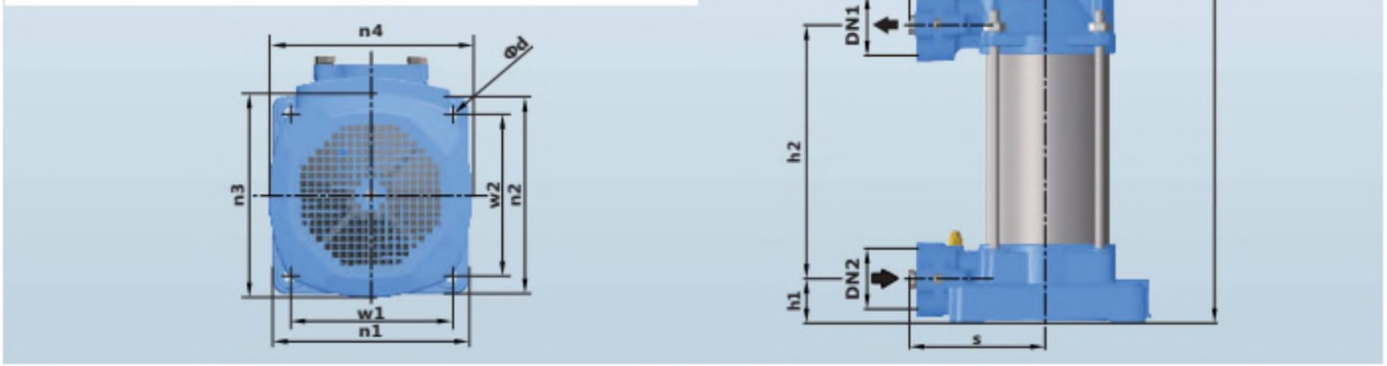

MODEL *MODELO*	DIMEN SION S / *DIMENSIONES* mm															ka	
	DN1	DN2	N	a	s	h	hi	h2	w1	w2	n1	n2	n3	n4	d	⊢	3-
PV 4x7/1.5	25/32	25/32	7	141	141	720	45.5	261.5	165	165	202	202	175	175	12	**28.0**	**27.0**
PV 4x9/2	25/32	25/32	9	141	141	790	45.5	331.5	165	165	202	202	175	175	12	**33.0**	**32.0**
PV 4x13/3	25/32	25/32	13	141	141	930	45.5	471.5	165	165	202	202	175	175	12	**38.0**	**37.0**
PV 4x16/4	25/32	25/32	16	141	141	1082	45.5	576.5	165	165	202	202	195	195	12	**48.0**	**47.0**
PV 6x5/1.5	25/32	25/32	5	141	141	650	45.5	191.5	165	165	202	202	175	175	12	**26.0**	**25.0**
PV 6x8/2	25/32	25/32	8	141	141	755	45.5	296.5	165	165	202	202	175	175	12	**31.0**	**30.0**
PV6x11/3	25/32	25/32	11	141	141	860	45.5	401.5	165	165	202	202	175	175	12	**36.0**	**35.0**
PV 6x15/4	25/32	25/32	15	141	141	1047	45.5	541.5	165	165	202	202	195	195	12	**46.0**	**45.0**
PV8x4/1.5	40/50	40/50	4	141	141	615	45.5	156.5	165	165	202	202	175	175	12	**26.0**	**25.0**
PV 8x7/2	40/50	40/50	7	141	141	720	45.5	261.5	165	165	202	202	175	175	12	**31.0**	**30.0**
PV 8x9/3	40/50	40/50	9	141	141	790	45.5	331.5	165	165	202	202	175	175	12	**36.0**	**35.0**
PV 8x12/4	40/50	40/50	12	141	141	942	45.5	436.5	165	165	202	202	195	195	12	**46.0**	**45.0**
PV 8x16/5.5	40/50	40/50	16	141	141	1082	45.5	576.5	165	165	202	202	195	195	12	-	**50.0**
PV 12x3/1.5	40/50	40/50	3	141	141	580	45.5	121.5	165	165	202	202	175	175	12	**25.0**	**24.0**
PV 12x5/2	40/50	40/50	5	141	141	650	45.5	191.5	165	165	202	202	175	175	12	**30.0**	**29.0**
PV 12x7/3	40/50	40/50	7	141	141	720	45.5	261.5	165	165	202	202	175	175	12	**35.0**	**34.0**
PV 12x9/4	40/50	40/50	9	141	141	837	45.5	331.5	165	165	202	202	195	195	12	**45.0**	**44.0**
PV 12x12/5.5	40/50	40/50	12	141	141	942	45.5	436.5	165	165	202	202	195	195	12	-	50.0
PV 12x17/7.5	40/50	40/50	17	141	141	1167	45.5	611.5	165	165	202	202	204	204	12	•	**60.0**
PV 30x7/10	50/65	50/65	7	170	170	1046	62	416	187	187	230	230	260	260	12	-	**86.0**
PV 30x9/12	50/65	50/65	9	170	170	1153	62	523	187	187	230	230	260	260	12	-	**92.0**
PV 30x11/15	50/65	50/65	11	170	170	1260	62	630	187	187	230	230	260	260	12	-	**100**

Product Specification (60HZ)

NEW/NUEVO

TECHNICAL DESCRIPTION

-New vertical multistage centrifugal pump
-Original design by PURITY
■ Both square motor & round motor available
-YE3 high efficient motor, with protection IP55 class F
-Pump case with anti-corrosive coating
• Impeller in techno-polimer
■ Shaft in stainless steel AISI 304 or galvanized iron
■ Suction and discharge port in cast iron G20 thread
• Quality NSK bearing, wear resistance mechanical seal

USING LIMITS

■ Liquid temperature between -10°C and +120°C
■ Ambient temperature up to +50°C
■ Max. working pressure 25 bar
■ Continuous service S1

APPLICATIONS

■ Suitable for use with clean water and liquids that are not chemically aggressive towards the materials from which the pump is made. The high efficiency and adaptability of these pumps to even the most unusual of applications, makes them ideal for use in the domestic, civil and industrial sectors; in particular for the distribution of water in combination with pressure sets and for pressure boosting.

TECHNICAL DATA /*DATOS TiCNICOS*

60 Hz n=3450 1/min

MODEL *MODELO*	Power *Potencia*		US gpm	Q DELIVERY / *CAUDAL*																				DN
				0	5	H	13	16	19	21	24	26	29	32	37	42	48	53	58	63	69	74	79	
			IZmin	0	20	40	50	60	70	80	90	100	110	120	140	160	180	200	220	240	260	280	300	
	kw	hp	m*/h	0	1.2	2.4	3	3.6	4^	4.8	5.4	6	6.6	7J	8.4	9.6	10.8	12	13.2	14.4	15.6	16.8	18	mm
PV4x 4/1.5	1.1	1.5		52	49	46	44	41	39	37	33	30	27	23										
PV 4x€/2	1.5	2		77	74	69	66	63	58	55	50	45	40	34										
PV 4x8/3	22	3		104	99	92	88	84	78	73	66	60	53	45										
PV 4x10/4	3	4		129	124	116	110	104	97	91	83	75	66	57										
PV 4x13/5.5	4	5.5		168	161	150	143	136	126	119	108	97	86	74										
PV 4x16/7.5	5.5	7.5		206	198	185	177	167	156	146	133	119	106	91										25x25
PV6x 3/1.5	11	1.5		40				36	35	33	31	30	28	26	22	17								32x32
PV 6x5/2	1.5	2		66				60	58	55	52	50	47	43	36	28								
PV 6x7/3	22	3		92				85	81	78	73	70	66	61	51	40								
PV fix 9/4	3	4		119				109	104	100	94	90	84	78	65	51								
PV 6x12/5.5	4	5.5		159				145	139	133	125	120	113	104	87	68								
PV 6x16/7.5	5.5	7.5		197				180	173	165	156	150	140	130	108	85								
PV 8x4/2	1.5	2	H(m)	53						44	42	41	39	37	33	29	23	17	12					
PV8x«/3	22	3		79						66	64	61	59	56	50	44	35	26	18					
PV 8x8/4	3	4		105						88	85	82	78	74	66	58	46	34	24					
PV 8x10/5.5	4	5.5		132						110	106	102	98	93	83	73	58	43	30					
PV 8x13/7.5	5.5	7.5		171						143	138	133	127	121	108	95	75	56	39					
PV 8x 17/10	7.5	10		224						187	180	173	167	158	141	124	99	73	51					
PV 12x3/2	1.5	2		44								43	42	41	40	38	36	33	30	27	24	20	17	40x40
PV 12x4/3	22	3		59								58	57	55	53	50	48	44	40	36	32	27	23	50x50
PV 12x5/4	3	4		73								72	71	69	66	63	60	55	50	45	40	34	29	
PV 12x7/5.5	4	5.5		102								101	99	97	92	88	84	77	70	63	56	48	40	
PV 12x9/7.5	5.5	7.5		132								130	127	124	119	113	108	99	90	81	71	61	51	
PV 12x11/10	7.5	10		161								159	155	152	145	138	131	121	110	99	87	75	63	
PV 12x15/15	11	15		220								217	212	207	198	189	179	165	150	136	119	102	86	

MODEL *MODELO*	Power *Potencia*		US gpm	Q DELIVERY / *CAUDAL*									DN
				0	26	53	79	106	132	159	185	211	
			l/min	0	100	200	300	400	500	600	700	800	
	kw	hp	nrp/h	0	6	12	18	24	30	36	42	48	mm
PV 30x5/10	7.5	10		105	100	93	86	78	67	54	36	4	50x50
PV30x«/12	9.2	12.5	H(m)	126	120	112	103	94	80	65	44	5	65x65
PV 30x8/15	11	15		168	158	149	138	124	106	86	58	6	80x80

PERFORMANCE CURVE / *CURVAS DEFUNCIONAMIENTO*

60 Hz n=34501/min

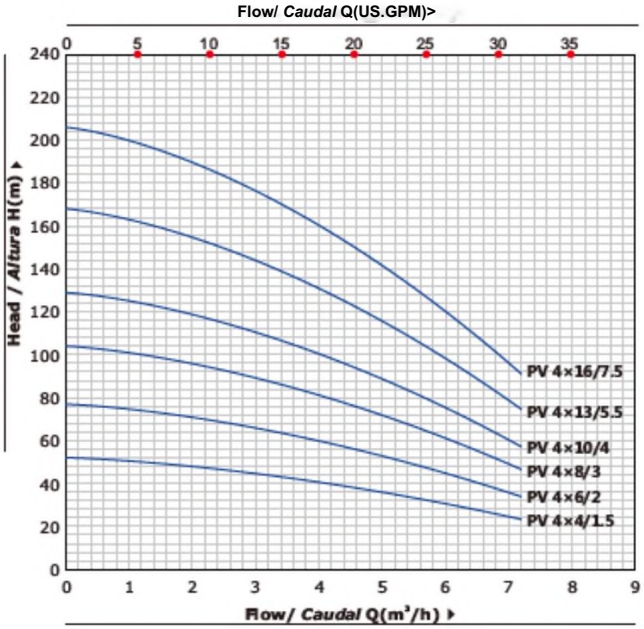

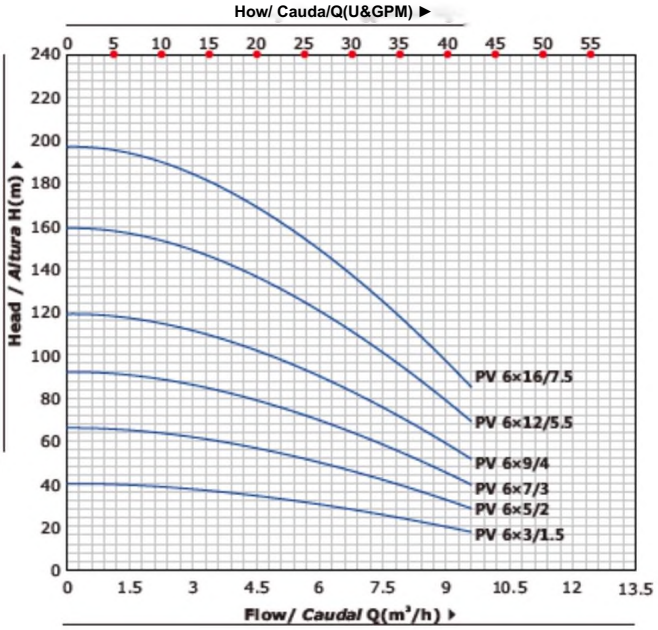

MATERIAL DESCRIPTION / *DESCRIPCIdN DE MATERIAL*

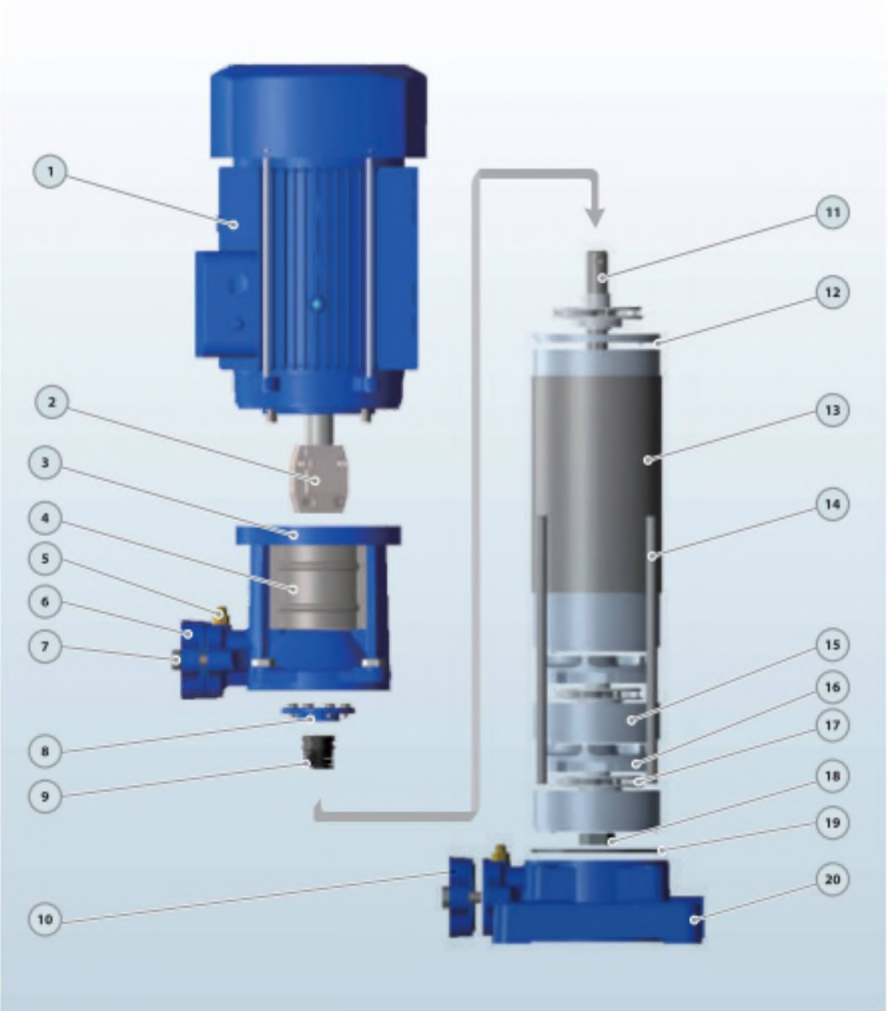

PERFORMANCE CURVE / *CURVAS DEFUNOONAMIENTO*

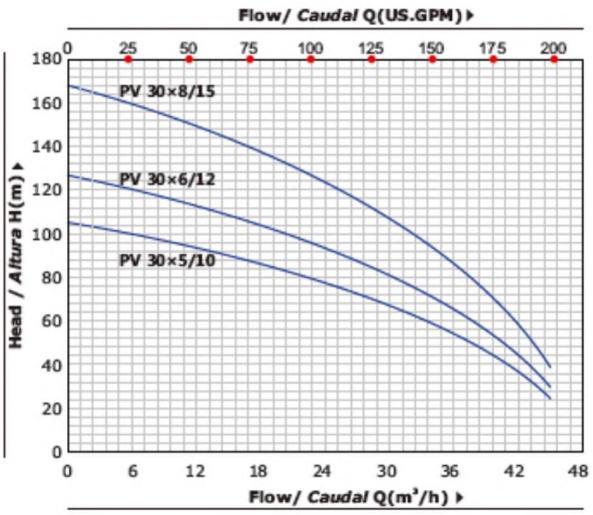

DIMENSIONS ANDWEIGHT/D/M£NS/ON£S y PESOS

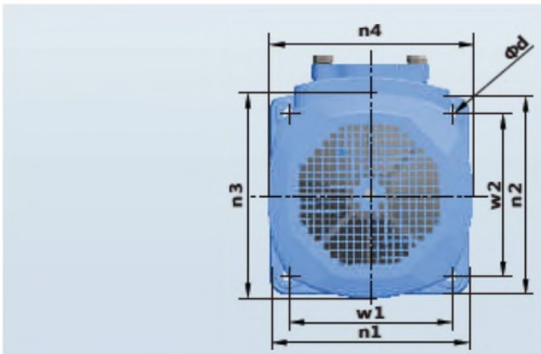

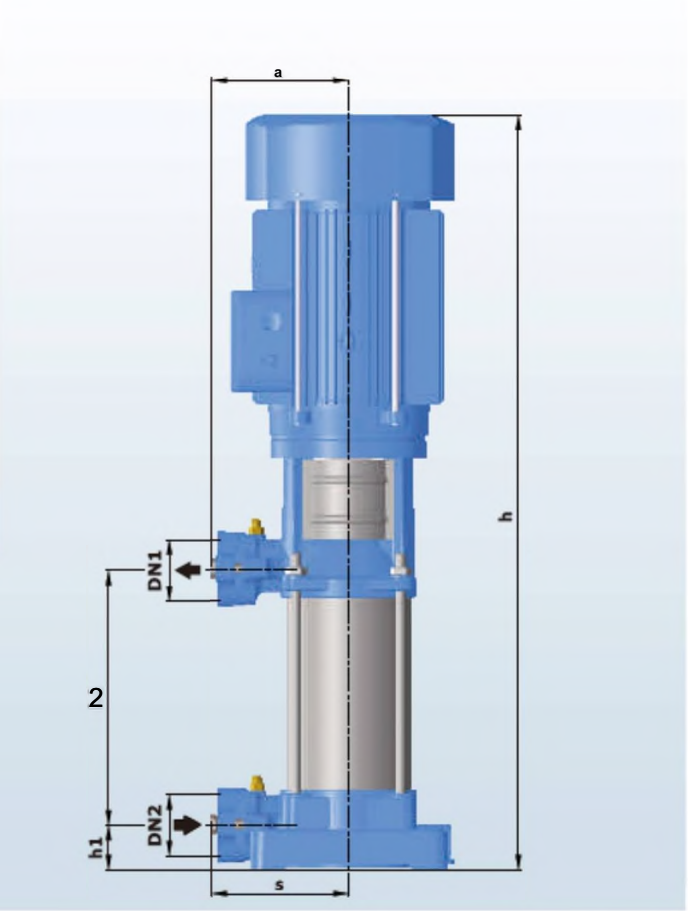

MODEL / MODELO		DIMENSIONS / *DIMENSIONES* mm															kg	
Single-phase Monofásico	Three-phase Trifásico	DN1	DN2	N	a	s	h hi K2 w1 w2 | n1						n2	n3 r>4 d			1~	3~
PV4x4/1.5	PV4x4/L5	25/32	25/32	4	141	141	615.5	45.5	156.5	165	165	202	202	175	175	| 12	27.0	26.0
PV 4x6/2	PV 4x6/2	25/32	25/32	6	141	141	685.5	45.5	226.5	165	165	202	202	175	175	if	3Z0	31.0
PV 4x8/3	PV 4x8/3	25/32	25/32	8	141	141	755.5	45.5	296.5	165	165	202	202	175	175	12	37.0	36.0
PV4X1Q/4	PV4xIQ/4	25/32	25^31	10	141	141	8725	45.5	366.5	165	165	202	202	195	195	12	47.0	46.0
-	PV 4x13/5.5	25/32	25/32	13	141	141	977.5	45.5	471.5	165	165	202	202	195	195	12	■	51.0
-	PV 4x16/7.5	25/32	25/32	16	141	141	11325	45.5	576.T	165	165	202	202	204	204	12	■	61.0
PV6x 3/1,5	PV6x3/L5	25/32	25/32	I-	141	141	580.5	45.5	121.5	165	165	202	302	175	175	12	26.0	25.0
FV 6x5/2	PV 6x5/2	25/32	2532	5	141	141	650.5	45.5	191.5	165	165	202	202	175	175	li	3L0	30.0
PV 6x7/3	PV 6x7/3	25/32	25/32	7	141	141	720.5	45.5	261.5	165	165	舶	202	175	175	□	36.0	35.0
PV 知9/4	PVSx，，感	25/32	25/32	9	141	141	837.5	45.5	331.5	165	165	202	202	195	195	12	46.0	45.0
-	PV 6x12/5.5	25/32	25/32	12-	141	141	942.5	45.5	436.5	165	165	202	202	195	195	12	-	50.0
-	PV6xI^7.5	25/32	25/32	16	141	141	11325	45.5	576.5	165	165	202	202	204 I 204 I if			■	60.0
PV 8x4/2	PV 8x4/2	40/50	40/50	4	141	141	615.5	45.5	1565	165	165	202	202	175	175	12	3 0.0	29. o
PV 8x€/3	PV 8x6/3	40/50	40/50	6	141	141	685.5	45.5	226.5	165	165	202	202	17(	175	12	3 5.0	34. o
PV 8x8/4	PV 8x8/4	40/50	40/50	8	141	141	8025 45.5 296.5			165	165	202	202	195	195	12	4 5.0	44. 49. o
-	PV 8xIQ/5.5	40/50	40/50	10	141	141	8725	45.5	366.5	165	165	202	202	195	195	12	-	S9. o
-	PV 8x13/7.5	40/50	40/50	13	141	141	1027.5	45.5	471.5	165	165	202	202	204	204	12	-	64. o
-	PV 8x17/10	40/50	40/50	17	141	141	11675	45.5	6115	165	165	202	202	2乂	204		-	o
PV12xV2	PV 12x3/2	40/50	40/50	3	141	141	580.5	45.5	121.5	165	I 16S I 202 I 202 I 175 | 17S I 12						2&0	27.0 o
PV 12x^3	PV12x^3^|40/50 40/50			4	141	141 61S5 453 1565 165					165	202	202	175	175	12	310	32.0
PV 12x5/4	RQ2x 5/4	40/50	40/50	5	141	141	697.5	45.5	191.5	165	165	202	202	195	195	12	4L0	40.0
-	PVllx^rSJ	40/50	40/50	7	MI	141	76Z5	455	趾5	兩	165	202	202	195	195	12	-	45.0
-	PV12x9jr7J	40^50	卜50	9	U1	141	887«5	4S»5	副5	祕	165	202	202	204	204	12	-	55.0
-	PVUxli/10	4(^504(^50		11	141	141	95Z5	45»5	4015	165	165	202 |	202	204	204	12	-	62.0
-	PV 12x15/15	40/50	40/50	15	141	141	1127.5	45.5	541.5	165	165	202	202	260	260	12	-	80.0
-	PV30x5/i❶	5(^655(^65		5	170	170	939	62	3的	187	187	230	230	260	260	12	•	84.0
-	PV 30x6/12	50/6550/65!		6	| 170 | 170		| 朔 |	62	|~362.5	187	I 1«7 I 230 I 230 I 260 I 260 I 12						-	90.0
-	PV 30x9/15	50/65 50/65! 8			| DO | 170 | HOP | 62 |4695| 187 | 187 | 230 | 230 | 260 | 260 | U												-	97.0

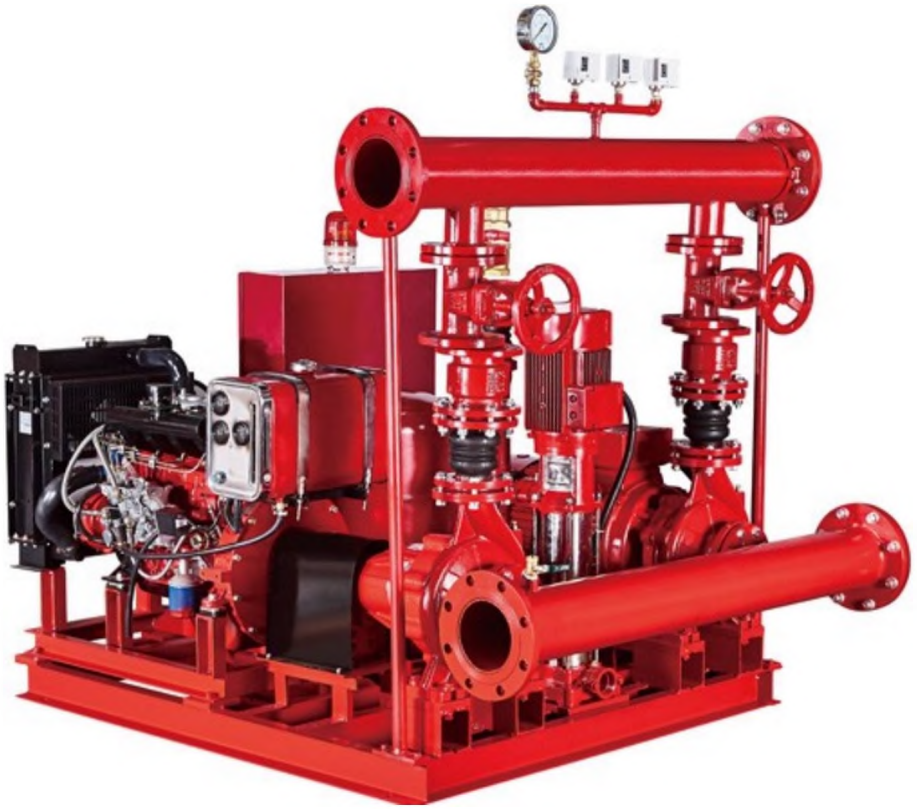

Fire Pump System PEDJ

Fire Fighting Pump Set with Electric Diesel and Jockey Pump

TECHNICAL DESCRIPTION

* Flow **50GPM--5000GPM**

* Head/Pressure **5-17bar (50-170m)**

* Switch **Automatically** among the three pumps

* Both **Manual and Automatic** operation is available

* Can work when the power is off

* **Customized size and pump group**

* YE3 **high efficient motor** with protection **IP55 class F**

* Pump case with **Anti-corrosive** coating

* With **NSK** bearings, wear resistance **mechanical seal**

* Different Mounting Styles,Easy Installation

* **ISO 9001** Manufacturing Facility

Product Specification (50HZ)

Lifeguard for your safety and property

A Fire Fighting pump is an essential element for all high rise buildings.
Fire pumps are also a necessity in warehouses and facilities that do not have adequate city water pressure.
As a professional fire pump factory and supplier, with more than decades of experience, we design, test and manufacture
fire pumps to cater to diversified needs of our customers.
Our standard pumps can be manufactured in skid mounted units which are piped and wired or separately.

We have various fire pumps

Types of pumps used for fire service include end suction pump, horizontal split case pump, monoblock cetrifugal pump,
diesel driving pump, multistage pump and vertical turbine models including stainless steel, cast iron and bronze construction in standard configurations.
Close coupled, frame mounted and engine drive options are also available.

We have different designs for fire pump groups which also can be customized

PEDJ- Electric pump+Diesel pump+Jockey pump+Control Cabinet design

PDJ - Diesel pump+Jockey pump+Control Cabinet design

PEJ - Electric pump+Jockey pump+Control Cabinet design

PED - Electric pump+Diesel pump+Control Cabinet design

(Pump type, Pressure tank, designs and material, all can be customized)

Applications

Fire Hose Rack Systems
Fire Hose Reel Systems
Fire Foam Systems
Fire Deluge Systems
Fire Hydrant Systems
Fire Sprinkler Systems

形 PURITY

Advantages

Energy-saving Certificate

Large Flow Capacity

YE3 Motor IP55 ClassF All Copper Wire

Stainless Steel 304 Impeller & Shaft

Anti-corrosive Coating

NSK Bearing

Costormized Sizes & Pumps

Good Quality & Service 2-Years Guarantee

命 PURITy

Structure

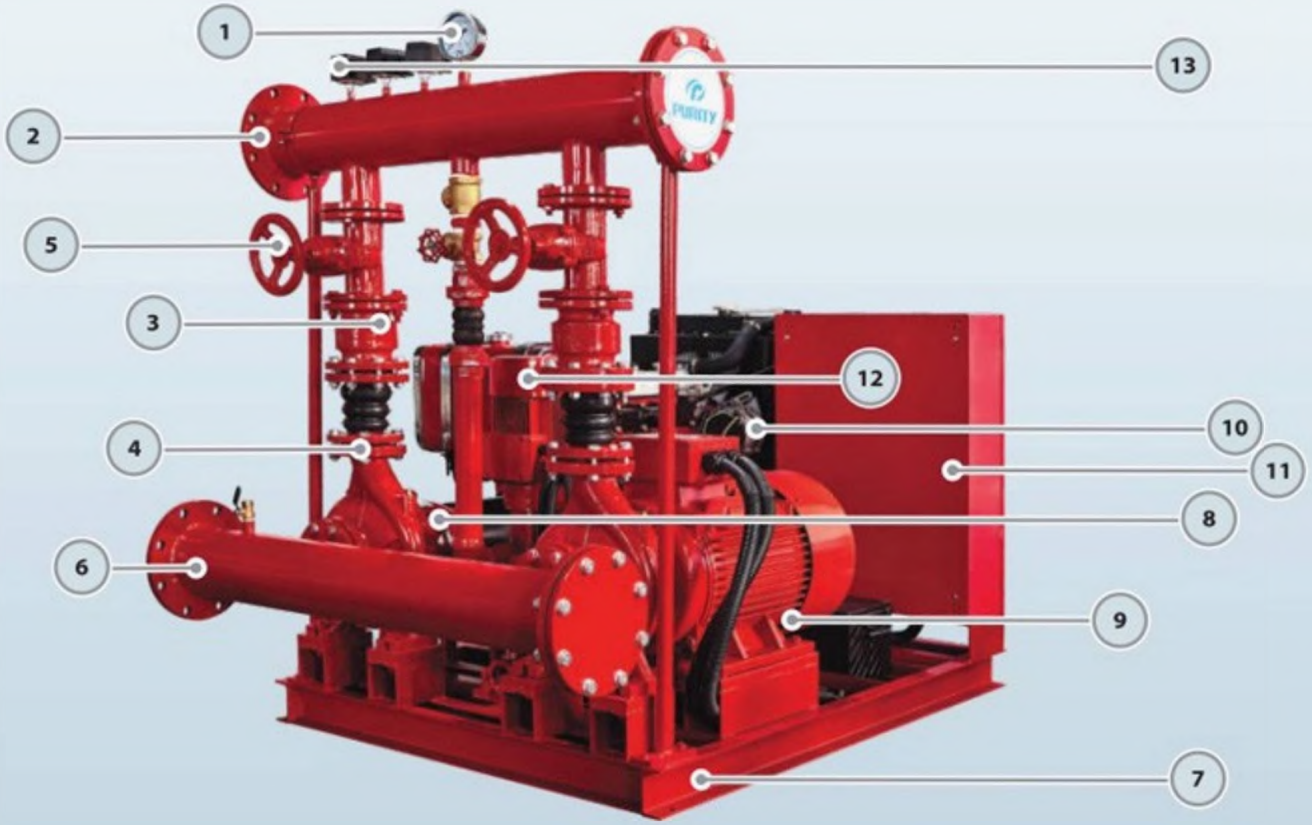

1.Pressure Gauge 2.Dicharge Pipe 3.Check Valve 4.Flexible Joint 5.Gate Valve 6.Suction Pipe 7. Base Frame 8.Pump for Diesel Engine 9.Electric Pump 10.Diesel Engine 11.Control Cabinet 12.Jockey Pump 13.Pressure Switch

命 PURITY

Fire Pump System Models PEDJ

PEDJ 500/ 8 -50-58-5.5

- Jockey Power: 5.5HP
- Diesel Engine Power: 58HP
- Electric Motor Power: 50HP
- Head/Pressure: 8 Bar
- Flow Capacity: 500GPM
- Purity Electric Diesel Jockey

GPM	BAR	REGULAR MODEL	MOTOR PUMP 2900/3500 rpm	PUMP FOR MOTOR &DIESEL ENGINE 2900/3500 rpm
				
50	6	PEDJ50/6-5.5-5.5-2	P2C 32-200/40	PS 32-200/40
80	7	PEDJ80/7-10-8.6-3	PST 32-250/75	PS 32-250/75
100		PEDJ100/7-10-8.6-3	PST 32-250/75	PS 32-250/75
120		PEDJ120/7-10-10-3	PST 32-250/75D	PS 32-250/75H
150		PEDJ150/7-15-10-3	PST 40-250/110	PS 40-250/110
200		PEDJ200/7-20-27-3	PST 40-250/150	PS 40-250/150
250		PEDJ250/7-25-27-4	PST 50-250/185	PS 50-250/185
300		PEDJ300/7-30-32-4	PST 50-250/220	PS 50-250/220
350		PEDJ350/7-30-32-4	PST 50-250/220	PS 50-250/220
400		PEDJ400/7-40-38-5.5	PST 65-250/300	PS 65-250/300
500	8	PEDJ500/8-50-58-5.5	PST 65-250/370	PS 65-250/370
750		PEDJ750/8-75-75-7.5	PST 80-250/550	PS 80-250/550
1000		PEDJ1000/8-100-99-10	PST 100-250/750	PS 100-250/750
1250		PEDJ1250/8-150-130-10	-	PS 125-250/1100
500	10	PEDJ500/10-60-61-7.5	-	PS 65-315/450
750		PEDJ750/10-100-99-10	-	PS 80-315/750
1000		PEDJ1000/10-125-113-12	-	PS 100-315/900
1250		PEDJ1250/10-180-170-15	-	PS 125-315/1320
500	13	PEDJ500/13-100-99-12	-	PS 65-315/750
750		PEDJ750/13-125-113-12	-	PS 80-315/900
1000		PEDJ1OOO/13-15O-13O-15	-	PS 100-315/1100
1250		PEDJ1250/13-220-170-15	-	PS 125-315/1600
1500		PEDJ1500/13-220-170-15	-	PS 125-315/1600

GPM	BAR	MOTOR	DIESEL	JOCKEY	
				 50HZ	60HZ
50	6	-	178-5.5HP	PV4x9/2HP	PV4x6/2HP
80	7	YE3-132S2-2-7.5kw	186-8.6HP	PV6xII/3HP	PV4x6/2HP
100		YE3-132S2-2-7.5kw	186-8.6HP	PV6xII/3HP	PV4x8/3HP
120		YE3-132S2-2-7.5kw	192-10HP	PV6xII/3HP	PV4x8/3HP
150		YE3-160MI-2-IIkw	192-10HP	PV6xII/3HP	PV4x8/3HP
200		YE3-160M2-2-15kw	380-27HP	PV6xII/3HP	PV4x8/3HP
250		YE3-160L-2-18.5kw	380-27HP	PV8xI2/4HP	PV 6x7/3HP
300		YE3-180M-2-22kw	385-32HP	PV8xI2/4HP	PV 8x8/4HP
350		YE3-180M-2-22kw	385-32HP	PV8xI2/4HP	PV 8x8/4HP
400		YE3-200LI-2-30kw	480-38HP	PV 12xI2/5.5HP	PV 12x7/5.5HP
500	8	YE3-200L2-2-37kw	490N-58HP	PV 12xI2/5.5HP	PV 12x7/5.5HP
750		YE3-250M-2-55kw	490Z-75HP	PV 12xI7/7.5HP	PV 12x9/7.5HP
1000		YE3-280S-2-75kw	4102Z-99HP	PV 30x7/10HP	PV 12xII/10HP
1250		YE3-315S-2-110kw	6110-150HP	PV30x7/10HP	PV30x5/10HP
500	10	YE3-225M-2-45kw	490-61HP	PV 12xI7/7.5HP	PV 12x9/7.5HP
750		YE3-280S-2-75kw	4102Z-99HP	PV 30x7/10HP	PV12xII/10HP
1000		YE3-280M-2-90kw	4108Z-113HP	PV 30x9/12HP	PV 30x6/12HP
1250		YE3-315M-2-132kw	6102ZS-170HP	PV 30xII/15HP	PV 30x8/15HP
500	13	YE3-280S-2-75kw	4102Z-99HP	PV 30x9/12HP	PV12xII/10HP
750		YE3-280M-2-90kw	4108Z-113HP	PV 30x9/12HP	PV 30x6/12HP
1000		YE3-315S-2-110kw	6110-150HP	PV 30xII/15HP	PV 30x8/15HP
1250		YE3-315LI-2-160kw	6102ZS-170HP	PV30xII/15HP	PV 30x8/15HP
1500		YE3-315LI-2-160kw	6102ZS-170HP	PV30xII/15HP	PV 30x8/15HP

Other sizes are also available

命 PURITY

Different Sets Can be Customized Depend on your Needs

More Fire Pump Groups are Available

PEDJ—Electric+Diesel+Jockey Pump +Controller

PDJ—Electric+Diesel Pump +Controller

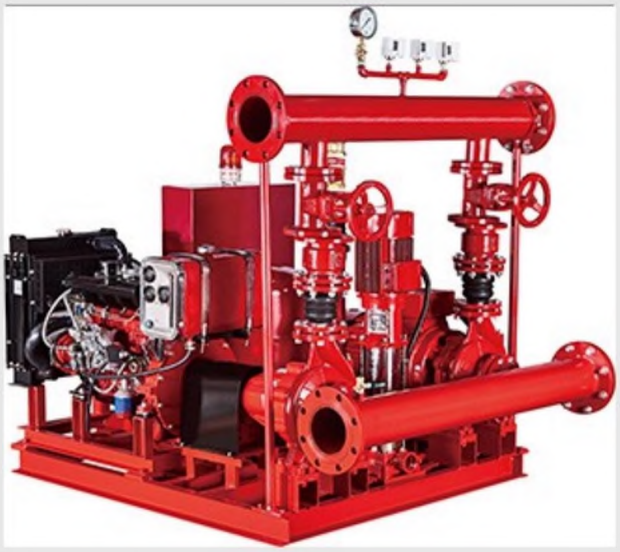

PEDJ--Electric+Diesel+Jockey Pump +Controller with Alarm

PEJ—Electric+Jockey Pump +Controller

PSDT—Diesel Pump+Pressure Tank
+Controller

PEET--2 Vertical Electric Pump
+ Pressure Tank

PEDJT-Electric+Diesel+Jockey Pump
4-Pressure Tank+Controller

PEDT—Electric+Diesel Pump
+ Pressure Tank+Controller

PSCM—Split Case Pump
+ Electric Motor

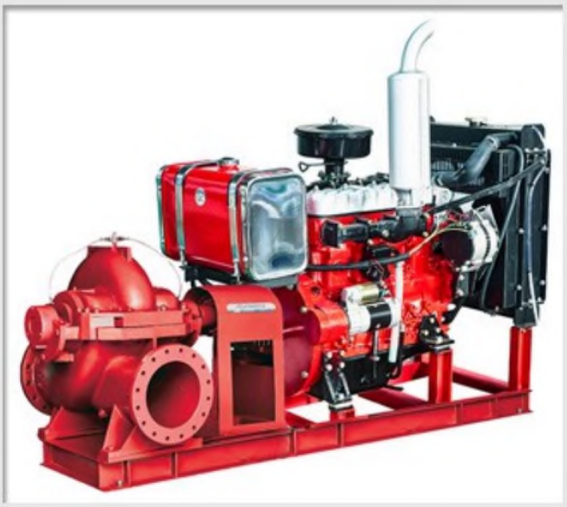

PSCD--Split Case Pump
+ Diesel Engine

Customized

Control Cabinet


High
Quality
Valves


Adjustable-
Pressure Switch
Pressure 1-30bar


Oil Tank
with
Controller


Coupling
Guard

Product Specification (60HZ)

Lifeguard for your safety and property

A Fire Fighting pump is an essential element for all high rise buildings.
Fire pumps are also a necessity in warehouses and facilities that do not have adequate city water pressure.
As a professional fire pump factory and supplier, with more than decades of experience, we design, test and manufacture
fire pumps to cater to diversified needs of our customers.
Our standard pumps can be manufactured in skid mounted units which are piped and wired or separately.

We have various fire pumps

Types of pumps used for fire service include end suction pump, horizontal split case pump, monoblock cetrifugal pump,
diesel driving pump, multistage pump and vertical turbine models including stainless steel, cast iron and bronze construction in standard configurations.
Close coupled, frame mounted and engine drive options are also available.

We have different designs for fire pump groups which also can be customized

PEDJ- Electric pump+Diesel pump+Jockey pump+Control Cabinet design

PDJ - Diesel pump+Jockey pump+Control Cabinet design

PEJ - Electric pump+Jockey pump+Control Cabinet design

PED - Electric pump+Diesel pump+Control Cabinet design

(Pump type, Pressure tank, designs and material, all can be customized)

Applications

Fire Hose Rack Systems
Fire Hose Reel Systems
Fire Foam Systems
Fire Deluge Systems
Fire Hydrant Systems
Fire Sprinkler Systems

形 PURITY

Advantages

Energy-saving Certificate

Large Flow Capacity

YE3 Motor IP55 ClassF All Copper Wire

Stainless Steel 304 Impeller & Shaft

Anti-corrosive Coating

NSK Bearing

Costormized Sizes & Pumps

Good Quality & Service 2-Years Guarantee

命 PURITy

Structure

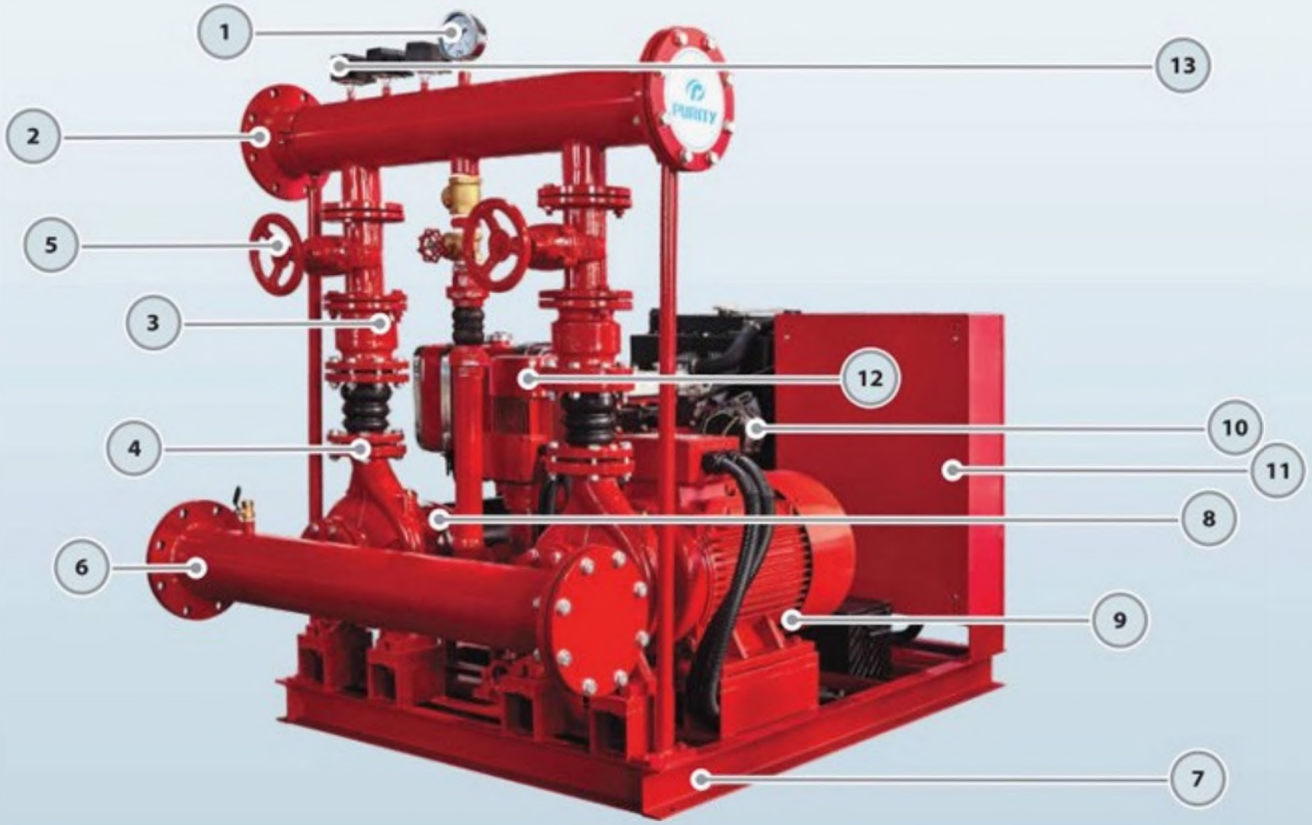

1.Pressure Gauge 2.Dicharge Pipe 3.Check Valve 4.Flexible Joint 5.Gate Valve 6.Suction Pipe 7. Base Frame 8.Pump for Diesel Engine 9.Electric Pump 10.Diesel Engine 11.Control Cabinet 12.Jockey Pump 13.Pressure Switch

勿 PURITY

Pumps for PEDJ System

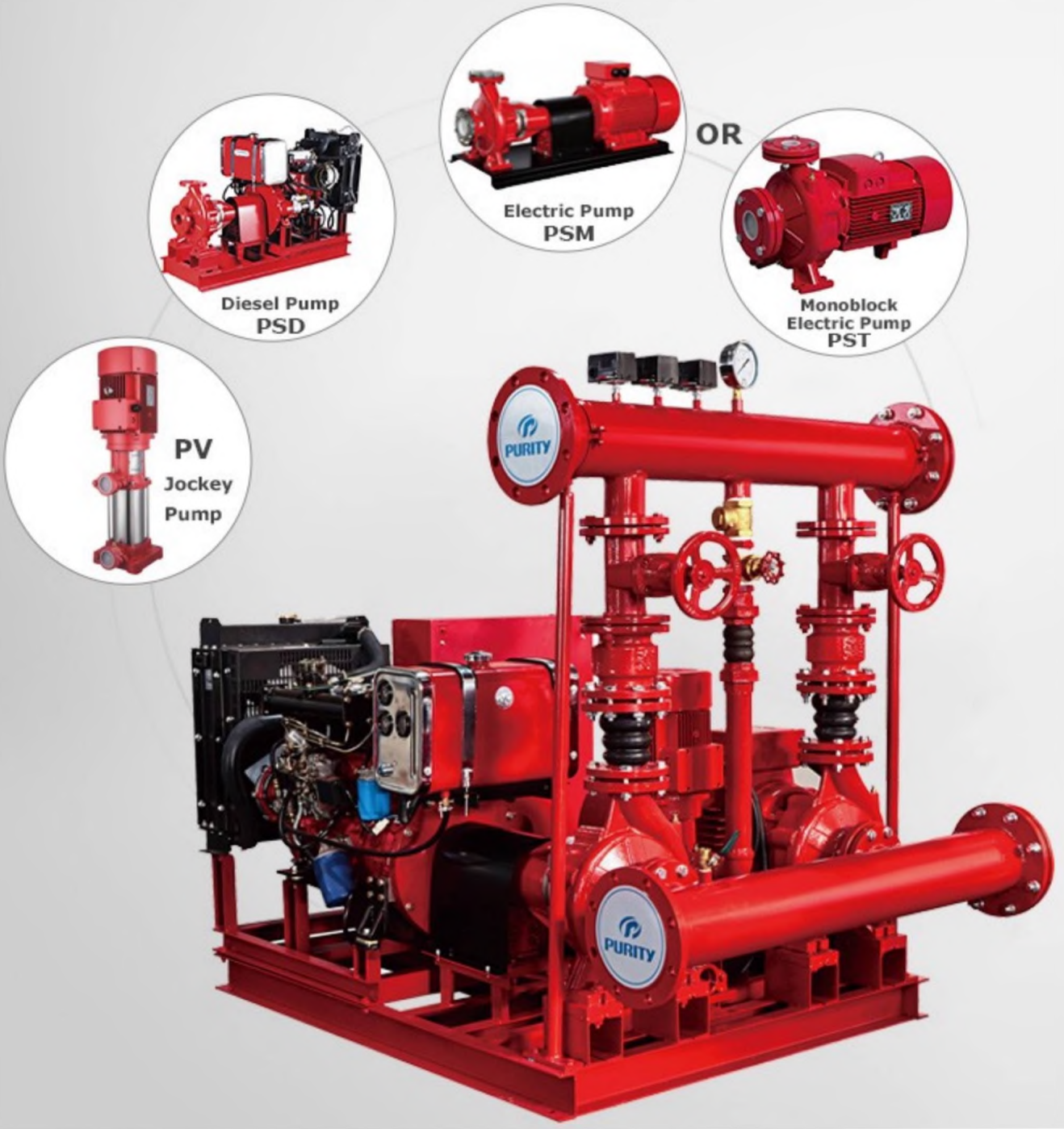

命 PURITY

Fire Pump System Models PEDJ

PEDJ 500/ 8 -50-58-5.5

- Jockey Power: 5.5HP
- Diesel Engine Power: 58HP
- Electric Motor Power: 50HP
- Head/Pressure: 8 Bar
- Flow Capacity: 500GPM
- Purity Electric Diesel Jockey

GPM	BAR	REGULAR MODEL	MOTOR PUMP 2900/3500 rpm	PUMP FOR MOTOR &DIESEL ENGINE 2900/3500 rpm
				
50	6	PEDJ50/6-5.5-5.5-2	P2C 32-200/40	PS 32-200/40
80	7	PEDJ80/7-10-8.6-3	PST 32-250/75	PS 32-250/75
100		PEDJ100/7-10-8.6-3	PST 32-250/75	PS 32-250/75
120		PEDJ120/7-10-10-3	PST 32-250/75D	PS 32-250/75H
150		PEDJ150/7-15-10-3	PST 40-250/110	PS 40-250/110
200		PEDJ200/7-20-27-3	PST 40-250/150	PS 40-250/150
250		PEDJ250/7-25-27-4	PST 50-250/185	PS 50-250/185
300		PEDJ300/7-30-32-4	PST 50-250/220	PS 50-250/220
350		PEDJ350/7-30-32-4	PST 50-250/220	PS 50-250/220
400		PEDJ400/7-40-38-5.5	PST 65-250/300	PS 65-250/300
500	8	PEDJ500/8-50-58-5.5	PST 65-250/370	PS 65-250/370
750		PEDJ750/8-75-75-7.5	PST 80-250/550	PS 80-250/550
1000		PEDJ1000/8-100-99-10	PST 100-250/750	PS 100-250/750
1250		PEDJ1250/8-150-130-10	-	PS 125-250/1100
500	10	PEDJ500/10-60-61-7.5	-	PS 65-315/450
750		PEDJ750/10-100-99-10	-	PS 80-315/750
1000		PEDJ1000/10-125-113-12	-	PS 100-315/900
1250		PEDJ1250/10-180-170-15	-	PS 125-315/1320
500	13	PEDJ500/13-100-99-12	-	PS 65-315/750
750		PEDJ750/13-125-113-12	-	PS 80-315/900
1000		PEDJ1OOO/13-15O-13O-15	-	PS 100-315/1100
1250		PEDJ1250/13-220-170-15	-	PS 125-315/1600
1500		PEDJ1500/13-220-170-15	-	PS 125-315/1600

GPM	BAR	MOTOR	DIESEL	JOCKEY	
				 50HZ	60HZ
50	6	-	178-5.5HP	PV4x9/2HP	PV4x6/2HP
80	7	YE3-132S2-2-7.5kw	186-8.6HP	PV6xII/3HP	PV4x6/2HP
100		YE3-132S2-2-7.5kw	186-8.6HP	PV6xII/3HP	PV4x8/3HP
120		YE3-132S2-2-7.5kw	192-10HP	PV6xII/3HP	PV4x8/3HP
150		YE3-160MI-2-IIkw	192-10HP	PV6xII/3HP	PV4x8/3HP
200		YE3-160M2-2-15kw	380-27HP	PV6xII/3HP	PV4x8/3HP
250		YE3-160L-2-18.5kw	380-27HP	PV8xI2/4HP	PV 6x7/3HP
300		YE3-180M-2-22kw	385-32HP	PV8xI2/4HP	PV 8x8/4HP
350		YE3-180M-2-22kw	385-32HP	PV8xI2/4HP	PV 8x8/4HP
400		YE3-200LI-2-30kw	480-38HP	PV 12xI2/5.5HP	PV 12x7/5.5HP
500	8	YE3-200L2-2-37kw	490N-58HP	PV 12xI2/5.5HP	PV 12x7/5.5HP
750		YE3-250M-2-55kw	490Z-75HP	PV 12xI7/7.5HP	PV 12x9/7.5HP
1000		YE3-280S-2-75kw	4102Z-99HP	PV 30x7/10HP	PV 12xII/10HP
1250		YE3-315S-2-110kw	6110-150HP	PV30x7/10HP	PV30x5/10HP
500	10	YE3-225M-2-45kw	490-61HP	PV 12xI7/7.5HP	PV 12x9/7.5HP
750		YE3-280S-2-75kw	4102Z-99HP	PV 30x7/10HP	PV12xII/10HP
1000		YE3-280M-2-90kw	4108Z-113HP	PV 30x9/12HP	PV 30x6/12HP
1250		YE3-315M-2-132kw	6102ZS-170HP	PV 30xII/15HP	PV 30x8/15HP
500	13	YE3-280S-2-75kw	4102Z-99HP	PV 30x9/12HP	PV12xII/10HP
750		YE3-280M-2-90kw	4108Z-113HP	PV 30x9/12HP	PV 30x6/12HP
1000		YE3-315S-2-110kw	6110-150HP	PV 30xII/15HP	PV 30x8/15HP
1250		YE3-315LI-2-160kw	6102ZS-170HP	PV30xII/15HP	PV 30x8/15HP
1500		YE3-315LI-2-160kw	6102ZS-170HP	PV30xII/15HP	PV 30x8/15HP

Other sizes are also available

命 PURITY

Different Sets Can be Customized Depend on your Needs

More Fire Pump Groups are Available

PEDJ—Electric+Diesel+Jockey Pump +Controller

PDJ—Electric+Diesel Pump +Controller

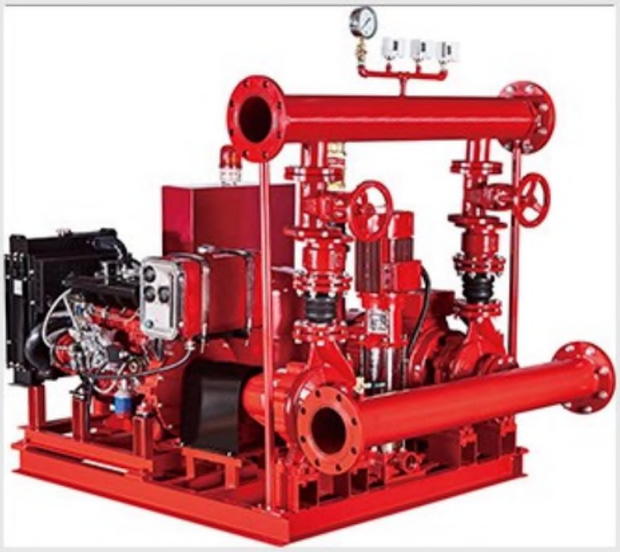

PEDJ--Electric+Diesel+Jockey Pump +Controller with Alarm

PEJ—Electric+Jockey Pump +Controller

PSDT—Diesel Pump+Pressure Tank
+Controller

PEET--2 Vertical Electric Pump
+ Pressure Tank

PEDJT-Electric+Diesel+Jockey Pump
4-Pressure Tank+Controller

PEDT—Electric+Diesel Pump
+ Pressure Tank+Controller

PSCM—Split Case Pump
+ Electric Motor

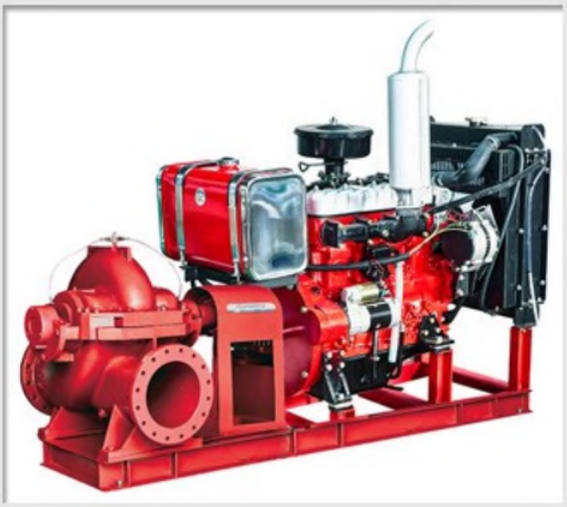

PSCD--Split Case Pump
+ Diesel Engine

Customized

Control Cabinet


High
Quality
Valves


Adjustable-
Pressure Switch
Pressure 1-30bar


Oil Tank
with
Controller


Coupling
Guard

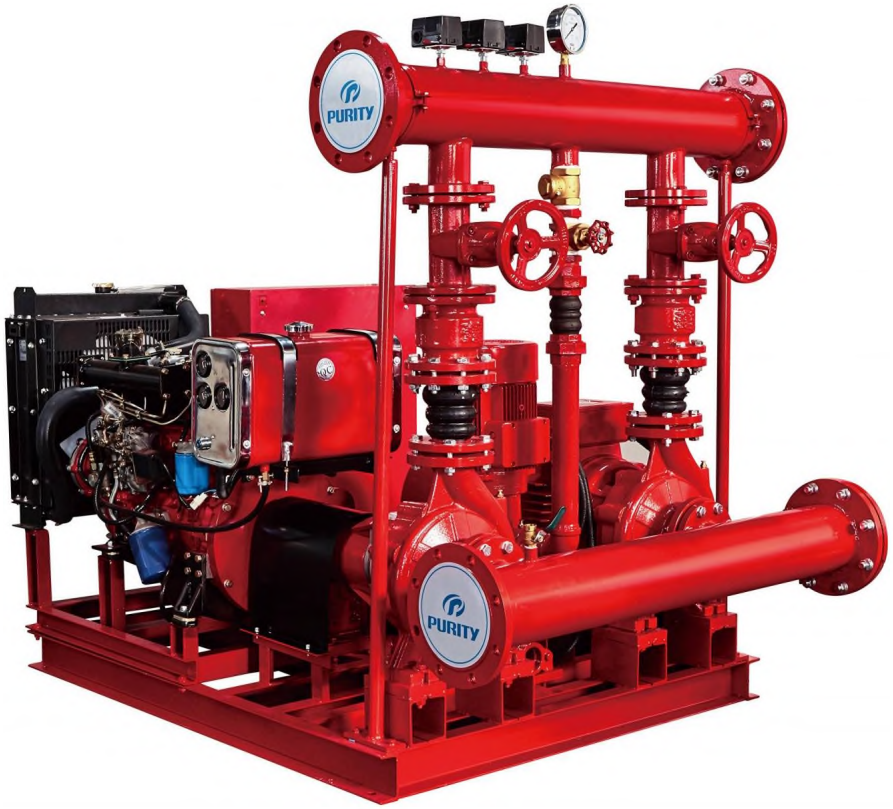

Fire Pump System PEDJ

Fire Pump Set with Electric Diesel and Jockey Pump

TECHNICAL DESCRIPTION

* Switch **Automatically** among the three pumps
* Both **Manual and Automatic** operation is available
* Can work when the power is off
* **Customized** size and pump group
* YE3 **high efficient motor** with protection **IP55 class F**
* High performance and low power consumption
* Pump case with **Anti-corrosive** coating
* With **NSK** bearings, wear resistance **mechanical seal**
* Different Mounting Styles,Easy Installation
* Low Maintenance Cost and available spare parts
* Network of **Technical Support**
* **ISO 9001** Manufacturing Facility

Product Description

PEDJ Fire Pump System

(End Suction **Electric** Centrifugal Pump + End Suction Pump with **Diesel** Engine + Multistage **Jockey** Pump + Control Panel Box)

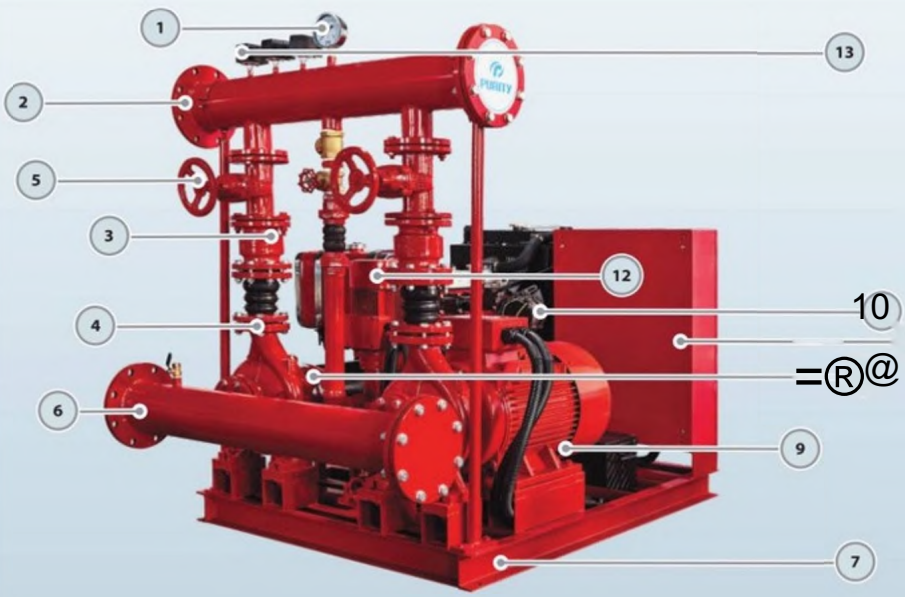

1、 **Pressure Gauge**
2 、 **Discharge Pipe**
3 、 **Check valve**
4 、 **Flexible joint**
5 、 **Gate valve**
6 、 **Suction Pipe**
7 、 **Base**
8 、 **Diesel Pump**
9 、 **Electric Pump**
10 、 **Diesel Engine**
11 、 **Control Panel**
12 、 **Jockey pump**
13 、 **Pressure Switch**

General Description for Fire Pump Set PEDJ

* PEDJ Fire Pump Set consists of **End Suction Centrifugal Pump** driven by Electric Motor, End Suction **Diesel Pump,** and **Vertical Jockey Pump.**
* Pumps are assembled with suction and discharge line accessories as well as **Control Panel.**
* Available **Flow Capacities 50-1500GPM.**
* Available **Head/Pressure 1-14bar.**

* Accessories include Suction pipe, Discharge pipe with Flanges, Battery, Gate Valves, Check Valves, Flexible Expansion Joints, Pressure Switches, Pressure Gauge,
Base Frame, etc.

Lifeguards for your safety

A Fire pump is an essential element for all highrise buildings. Fire pumps are also a necessity in warehouses and facilities that do not have adequate city water pressure.
With more than two decades of experience, we design, test and manufacture fire pumps to cater to diversified needs of our customers.
Our standard pumps can be manufactured in skid mounted units which are piped and wired. All the pumps are on a common base which also can be enclosed.
Our most comprehensive types of pumps used for fire service include end suction pump, horizontal split case pump and vertical pump models including stainless steel,
cast iron and bronze construction in standard configurations are provided by us. Close coupled frame mounted and engine drive options are also available.

APPLICATIONS

* Fire Fighting System
* Fire Hose Rack Systems
* Fire Hose Reel Systems
* Fire Foam Systems
* Fire Deluge Systems
* Fire Hydrant Systems
* Fire Sprinkler Systems

USING LIMITS

Liquid temperature between -10°C and +120°C
Ambient temperature up to +50°C
Max. working pressure 15 bar
Continuous service S1

PATENTS

Registered model PST
Registered Patent Design n° 201530478502.0

Main Pumps for Fire Pump Set PEDJ

Fire Pump Group Technical Data and Quick Selection Table for Pump Models

GPM	BAR	REGULAR MODEL MODELO REGULAR	MOTOR PUMP MOrOBOMBA	PUMP FOR ELECTRIC *B (WBA PARA ELeCTWaOAD* 2900rpm	PUMP COUPUNG MOTOR MOTOR *CONEX16NDE* LA BOMBA	MOTOR MOTOR	CMESBL OISSEI.	JOCKEY *JOCKEY*
								
50	6	P€W5（y6-S5-S5-2	PX 32-200/40	-	-	-	17BS5HP	PV4x9/2HP
的		托邸的 Y7-10-8.6-3	PST3225V7S	PS 32-2S（y75	PSM 32-2S<y75	YBI»S227Skw	186-8.6HP	PV6к11/3HP
100		PHW1W71O>«.6>3	PST32-25V7S	PS 12-2S（y75	PSM S-2S4W5	YB-I»S2-2-75Itw	IdS^HP	PV6«11/3HP
120		PH)H2（y710-10-3	PST 32-25O/7SD	PS32.2M"5H	PSM 32-25<y75H	YB.132S.2.7SICW	192-10HP	PV6к11/3HP
150		PHW1SQ/71S103	PST 40-250/UO	PS 40250/110	P^M4a2WU0	YE3-160M12-IIkw	19M0HP	PV6xII/3HP
200	7	PH)J20（y7-20-27-3	PST 4O-2S0/1S0	PS 40-250/150	PSM 40-2$<VI$0	YE3460M2>2-I$kw	38O-27HP	PV6xII/3HP
250		P€OI2»y7-25-27-4	PST SO-2SO/1S5	PS 50^250/135	pSMsa?s（viss	YB.160I.218Aw	38O27HP	PV8xI2/4HP
300		P®J3O（y7.3O-32-4	PST5M50/2M	PS 50-250/220	PSM SO-2S（y22O	YE3-1BOM-2-221CW	33S-32HP	PV8xI2/4HP
350		P(DBS（y7. JO-32-4	PST 50*250/220	PS »250/220	P$M5a2S（y220	YB-W0I^2-2»w	38S32HP	PV8«12/4HP
400		PHMWWZ40・级 SS	PST 65-250/300	PS6S-25W30O	PSM6S-2SV300	YB-200U-2-3Ckw	480-18HP	PV12xI2^SHP
SOO		PWS00/^50 »5S	PST 65-2S0/J70	PS6S-25O/J7O	PSM 6S-2«yP0	YB-2O0Q237kw	49CN-58HP	PV 12ш12/SSHP
7S0	8	P£DJ75<V8-75-75-7S	PST80-2S0/W)	PS 80250/550	(9) 8O2SVS50	YE3-25OM.2-5SIMr	490Z7SW	PV 12xI7/7.SHP
1000		WDI1000/8-W0 99 10	PST 100-25V7SO	P$ 100-25V750	PSM 100-25(^750	YU-28OS-2-7Skw	4102ZWHP	PV »x7/10HP
1250		Pm）1250/S-IS0-I»-10	-	PS 125^50/1100	wm i2S2s（ynoo	YB31S$-2-U0Icw	6102Q-13CHP	PV 30«7ACHP
SOO		P£W$00/U>60-6175	-	PS6$-315/«O	PSM 6S-31S/450	YB-225M^2-4»cw	49O61HP	PV 12xI7/7.SHP
7S0	10	P€DI75（yiOWO<9^10	-	PS8O31S/7S0	PSM8O-11V7S0	YE328O$>2-75kw	41Q2Z99HP	PV 3O«7A0HP
1000		PWJ1000/1012SU342	-	PS 100-315^900	PSM 100-315*900	YB-280^2-90kw	4108Z-113HP	PV 30«9/12HP
12S0		PH>I125（M1O-130-170-15	-	PS 125-315/1320	PSM US00 1320	YB-31SM-2-132itw	6102ZS17CHP	PV 30xII/ISHP
SOO		Ptwwyi3-100-9942	-	PS65-31S/75O	PSM 格315/750	YU-28OS-2-75kw	4102Z-99HP	PV »«9A2HP
750		PEQJ7S0/B12S11312	-	PS 的31S/90O	PSM8M1VSOO	YB-28OI^2-90Icw	4108Z-113HP	PV 30x9A2HP
1000	13	PtDJIOOOA 3-150130 15	-	PS100315A100	PSM 10O-31S<U00	YB315$-2110icw	6102Q130HP	PV XxIVISHP
12S0		ra»125（m 抓 1704S	-	PS 12^31^1600	WM 12S31V1600	YEMISU-2460kw	6102ZS-170HP	W »xII/15HP
1S00		pa>ii5ayi3-220-i70.i5	-	f>S12S-3iyi«00	PSM 125*31^1600	YE>31SU-2460kw	G102ZS-170HP	PV »xIV15HP

Other sizes can provide on request ***/Bojo ptdkio otrot modtfot diponiblt.***

TECHNICAL DATA

50/60 Hz n=2900/3500 1/min

GPM	Bar	Pump for diesel 2900rpm	Pump for electric 3500rpm	Motor pump 3500rpm
80	7	PS32-250/75	PS32-200/75	PST32-200/75
100	7	PS32-250/75	PS32-200/75	PST32-200/75
120	7	PS32-250/75H	PS32-200/75H	PST32-200/75D
150	7	PS40-250/110	PS40-200/110	PST40-200/110
200	7	PS40-250/150	PS40-200/150	PST40-200/150
250	7	PS50-250/185	PS50-200/185	PST50-200/185
300	7	PS50-250/220	PS50-200/220	PST5O-2OO/22O
350	7	PS50-250/220	PS50-200/220	PST5O-2OO/22O
400	7	PS65-250/300	PS65-200/300	PST65-200/300
500	7	PS6S-250/300	PS65-200/300	PST65-200/300
500	8	PS65-250/370	PS65-200/370	PST65-200/370
500	9	PS65-315/370	PS65-250/370	-
500	10	PS65-315/450	PS65-250/450	-
500	11	PS65-315/550	PS65-250/550	-
500	12	PS65-315/750	PS65-250/750	-
500	13	PS65-315/750	PS65-250/750	■
750	7	PS80-250/450	PS80-200/450	PST80-200/450
750	8	PS80-250/S50	PS80-200/550	PST80-200/550
750	9	PS80-315/750	PS80-250/750	垂
750	10	PS80-315/750	PS80-250/750	-
750	11	PS80-315/750	PS80-250/750	垂
750	12	PS80-315/900	PS80-250/900	霧
750	13	PS80-315/900	PS80-250/900	-
1000	7	PS1OO-25O/55O	PS1OO-2OO/55O	PST100-200/550
1000	8	PS100-250/750	PS100-200/750	PST100-200/750
1000	9	PS1OO-315/75O	PS100-250/750	-
1000	10	PS1OO-315/9OO	PS100-250/900	垂
1000	11	PS100-315/900	PS100-250/900	-
1000	12	PS1OO-315/11OO	PS100-250/1100	-
1000	13	PS1OO-315/11OO	PS100-250/1100	垂
1000	14	PSC80-370A1/1320	PSC80-370A1/1320	-
1000	15	PSC80-370A1/1320	PSC80-370A1/1320	-
1250	7	PS125-25O/9OO	PS125-200/900	-
1250	8	PS125-250/1100	PS125-200/1100	-
1250	9	PS125-315/1100	PS125-25O/11OO	■
1250	10	PS125-315/1320	PS125-250/1320	-
1250	11	PS125-315/1320	PS125-250/1320	噴
1250	12	PS125-315/1600	PS125-25O/16OO	-
1250	13	PS125-315/1600	PS125-250/1600	-

GPM	Bar	Pump for diesel 2900rpm	Pump for electric 3500rpm	Motor pump 3500rpm
1250	14	PSC100-375A2/2000	PSC100-375A2/2000	-
1250	15	PSC100-375A2/2000	PSC100-375A2/2000	-
1250	17	PSC100-375B1/2500	PSC100-375B1/2500	-
1500	8	PS125-250/1100	PS125-200/1100	-
1500	9	PS125-315/1100	PS125-250/1100	-
1500	10	PS125-315/1320	PS125-250/1320	-
1500	11	PS125-315/1320	PS125-250/1320	-
1500	12	PS125-315/1600	PS125-250/1600	-
1500	13	PS125-315/1600	PS125-250/1600	-
1500	15	PSC100-375B1/2500	PSC100-375B1/2500	-
1500	18	PSC100-375A1/2500	PSC1OO-375A1/25OO	-
2000	8	PS150-250/1600	PS150-200/1600	-
2000	10	PS150-315/2000	PS150-250/2000	-
2000	11	PSC125-290A1/2000	PSC125-290A1/2000	-
2000	12	PSC125-365A3/2500	PSC125-365A3/25OO	-
2000	13	PS15O-315/25OO	PS15O-25O/25OO	-
2000	15	PSC125-365A2/3150	PSC125-365A2/3150	-
2000	17	PSC125-365B1/3550	PSC125-365B1/355O	-
2500	8	PS150-250/1600	PS150-200/1600	-
2500	10	PS150-315/2000	PS150-250/2000	-
2500	12	PS15O-315/25OO	PS150-250/2500	-
2500	13	PSC150-460B2/3150	PSC150^60B2/3150	-
2500	15	PSC125-365A2/3550	PSC125-365A2/3550	-
2500	17	PSC125-365BV3550	PSC125-365B1/355O	-
3000	10	PSC15O-36OA3/25OO	PSC15O-36OA3/25OO	-
3000	12	PSC150-360A2/3550	PSC15O-36OA2/355O	-
3000	13	PSC150^60B2/3550	PSC150-460B2/3550	-
3000	14	PSC150-360B1/4000	PSC150-360B1/4000	-
3000	16	PSC1SCM60B1/4500	PSC150-460BV4500	-
4000	11	PSC200-420B3/4000	PSC200-420B3/4000	-
4000	14	PSC200-420B2/5000	PSC200-420B2/5000	-
4000	15	PSC150-360A1/5000	PSC15O-36OA1/5OOO	-
4000	17	PSC150-460AV5600	PSC150-460A1/5600	-
5000	10	PSC200-320B2/4000	PSC200-320B2/4000	-
5000	11	PSC200-320B1/5000	PSC200-320BV5000	-
5000	12	PSC200-320A1/5600	PSC200-320A1/5600	-
5000	14	PSC200-420A2/5600	PSC200420A2/5600	-
5000	16	PSC20CM20B1/7100	PSC200^20BI/7100	-
5000	17	PSC200-420AV8000	PSC20CM20A1/8000	-

Other sizes can provide on request.

Product Description

PEDJ Fire Pump System

(End Suction **Electric** Centrifugal Pump + End Suction Pump with **Diesel** Engine + Multistage **Jockey** Pump + Control Panel Box)

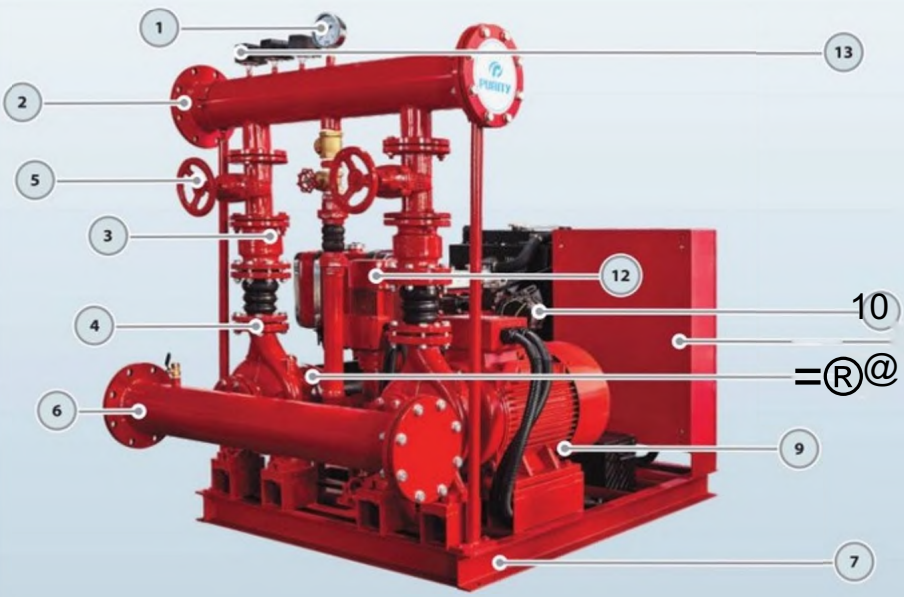

1、 **Pressure Gauge**
2 、 **Discharge Pipe**
3 、 **Check valve**
4 、 **Flexible joint**
5 、 **Gate valve**
6 、 **Suction Pipe**
7 、 **Base**
8 、 **Diesel Pump**
9 、 **Electric Pump**
10 、 **Diesel Engine**
11 、 **Control Panel**
12 、 **Jockey pump**
13 、 **Pressure Switch**

General Description for Fire Pump Set PEDJ

* PEDJ Fire Pump Set consists of **End Suction Centrifugal Pump** driven by Electric Motor, End Suction **Diesel Pump,** and **Vertical Jockey Pump.**
* Pumps are assembled with suction and discharge line accessories as well as **Control Panel.**
* Available **Flow Capacities 50-1500GPM.**
* Available **Head/Pressure 1-14bar.**

* Accessories include Suction pipe, Discharge pipe with Flanges, Battery, Gate Valves, Check Valves, Flexible Expansion Joints, Pressure Switches, Pressure Gauge,
Base Frame, etc.

Lifeguards for your safety

A Fire pump is an essential element for all highrise buildings. Fire pumps are also a necessity in warehouses and facilities that do not have adequate city water pressure.
With more than two decades of experience, we design, test and manufacture fire pumps to cater to diversified needs of our customers.
Our standard pumps can be manufactured in skid mounted units which are piped and wired. All the pumps are on a common base which also can be enclosed.
Our most comprehensive types of pumps used for fire service include end suction pump, horizontal split case pump and vertical pump models including stainless steel,
cast iron and bronze construction in standard configurations are provided by us. Close coupled frame mounted and engine drive options are also available.

APPLICATIONS

* Fire Fighting System
* Fire Hose Rack Systems
* Fire Hose Reel Systems
* Fire Foam Systems
* Fire Deluge Systems
* Fire Hydrant Systems
* Fire Sprinkler Systems

USING LIMITS

Liquid temperature between -10°C and +120°C
Ambient temperature up to +50°C
Max. working pressure 15 bar
Continuous service S1

PATENTS

Registered model PST
Registered Patent Design n° 201530478502.0

Main Pumps for Fire Pump Set PEDJ

Fire Pump Group Technical Data and Quick Selection Table for Pump Models

GPM	BAR	REGULAR MODEL MODELO REGULAR	MOTOR PUMP MOrOBOMBA	PUMP FOR ELECTRIC *B (WBA PARA ELeCTWaOAD* 2900rpm	PUMP COUPUNG MOTOR MOTOR *CONEX16NDE* LA BOMBA	MOTOR MOTOR	CMESBL OISSEI.	JOCKEY *JOCKEY*
								
50	6	P€W5（y6-S5-S5-2	PX 32-200/40	-	-	-	17BS5HP	PV4x9/2HP
的		托邸的 Y7-10-8.6-3	PST3225V7S	PS 32-2S（y75	PSM 32-2S<y75	YBI»S227Skw	186-8.6HP	PV6к11/3HP
100		PHW1W71O>«.6>3	PST32-25V7S	PS 12-2S（y75	PSM S-2S4W5	YB-I»S2-2-75Itw	IdS^HP	PV6«11/3HP
120		PH)H2（y710-10-3	PST 32-25O/7SD	PS32.2M"5H	PSM 32-25<y75H	YB.132S.2.7SICW	192-10HP	PV6к11/3HP
150		PHW1SQ/71S103	PST 40-250/UO	PS 40250/110	P^M4a2WU0	YE3-160M12-IIkw	19M0HP	PV6xII/3HP
200	7	PH)J20（y7-20-27-3	PST 4O-2S0/1S0	PS 40-250/150	PSM 40-2$<VI$0	YE3460M2>2-I$kw	38O-27HP	PV6xII/3HP
250		P€OI2»y7-25-27-4	PST SO-2SO/1S5	PS 50^250/135	pSMsa?s（viss	YB.160I.218Aw	38O27HP	PV8xI2/4HP
300		P®J3O（y7.3O-32-4	PST5M50/2M	PS 50-250/220	PSM SO-2S（y22O	YE3-1BOM-2-221CW	33S-32HP	PV8xI2/4HP
350		P(DBS（y7. JO-32-4	PST 50*250/220	PS »250/220	P$M5a2S（y220	YB-W0I^2-2»w	38S32HP	PV8«12/4HP
400		PHMWWZ40・级 SS	PST 65-250/300	PS6S-25W30O	PSM6S-2SV300	YB-200U-2-3Ckw	480-18HP	PV12xI2^SHP
SOO		PWS00/^50 »5S	PST 65-2S0/J70	PS6S-25O/J7O	PSM 6S-2«yP0	YB-2O0Q237kw	49CN-58HP	PV 12ш12/SSHP
7S0	8	P£DJ75<V8-75-75-7S	PST80-2S0/W)	PS 80250/550	(9) 8O2SVS50	YE3-25OM.2-5SIMr	490Z7SW	PV 12xI7/7.SHP
1000		WDI1000/8-W0 99 10	PST 100-25V7SO	P$ 100-25V750	PSM 100-25(^750	YU-28OS-2-7Skw	4102ZWHP	PV »x7/10HP
1250		Pm）1250/S-IS0-I»-10	-	PS 125^50/1100	wm i2S2s（ynoo	YB31S$-2-U0Icw	6102Q-13CHP	PV 30«7ACHP
SOO		P£W$00/U>60-6175	-	PS6$-315/«O	PSM 6S-31S/450	YB-225M^2-4»cw	49O61HP	PV 12xI7/7.SHP
7S0	10	P€DI75（yiOWO<9^10	-	PS8O31S/7S0	PSM8O-11V7S0	YE328O$>2-75kw	41Q2Z99HP	PV 3O«7A0HP
1000		PWJ1000/1012SU342	-	PS 100-315^900	PSM 100-315*900	YB-280^2-90kw	4108Z-113HP	PV 30«9/12HP
12S0		PH>I125（M1O-130-170-15	-	PS 125-315/1320	PSM US00 1320	YB-31SM-2-132itw	6102ZS17CHP	PV 30xII/ISHP
SOO		Ptwwyi3-100-9942	-	PS65-31S/75O	PSM 格315/750	YU-28OS-2-75kw	4102Z-99HP	PV »«9A2HP
750		PEQJ7S0/B12S11312	-	PS 的31S/90O	PSM8M1VSOO	YB-28OI^2-90Icw	4108Z-113HP	PV 30x9A2HP
1000	13	PtDJIOOOA 3-150130 15	-	PS100315A100	PSM 10O-31S<U00	YB315$-2110icw	6102Q130HP	PV XxIVISHP
12S0		ra»125（m 抓 1704S	-	PS 12^31^1600	WM 12S31V1600	YEMISU-2460kw	6102ZS-170HP	W »xII/15HP
1S00		pa>ii5ayi3-220-i70.i5	-	f>S12S-3iyi«00	PSM 125*31^1600	YE>31SU-2460kw	G102ZS-170HP	PV »xIV15HP

Other sizes can provide on request ***/Bojo ptdkio otrot modtfot diponiblt.***

TECHNICAL DATA

50/60 Hz n=2900/3500 1/min

GPM	Bar	Pump for diesel 2900rpm	Pump for electric 3500rpm	Motor pump 3500rpm
80	7	PS32-250/75	PS32-200/75	PST32-200/75
100	7	PS32-250/75	PS32-200/75	PST32-200/75
120	7	PS32-250/75H	PS32-200/75H	PST32-200/75D
150	7	PS40-250/110	PS40-200/110	PST40-200/110
200	7	PS40-250/150	PS40-200/150	PST40-200/150
250	7	PS50-250/185	PS50-200/185	PST50-200/185
300	7	PS50-250/220	PS50-200/220	PST5O-2OO/22O
350	7	PS50-250/220	PS50-200/220	PST5O-2OO/22O
400	7	PS65-250/300	PS65-200/300	PST65-200/300
500	7	PS6S-250/300	PS65-200/300	PST65-200/300
500	8	PS65-250/370	PS65-200/370	PST65-200/370
500	9	PS65-315/370	PS65-250/370	-
500	10	PS65-315/450	PS65-250/450	-
500	11	PS65-315/550	PS65-250/550	-
500	12	PS65-315/750	PS65-250/750	-
500	13	PS65-315/750	PS65-250/750	■
750	7	PS80-250/450	PS80-200/450	PST80-200/450
750	8	PS80-250/S50	PS80-200/550	PST80-200/550
750	9	PS80-315/750	PS80-250/750	垂
750	10	PS80-315/750	PS80-250/750	-
750	11	PS80-315/750	PS80-250/750	垂
750	12	PS80-315/900	PS80-250/900	霧
750	13	PS80-315/900	PS80-250/900	-
1000	7	PS1OO-25O/55O	PS1OO-2OO/55O	PST100-200/550
1000	8	PS100-250/750	PS100-200/750	PST100-200/750
1000	9	PS1OO-315/75O	PS100-250/750	-
1000	10	PS1OO-315/9OO	PS100-250/900	垂
1000	11	PS100-315/900	PS100-250/900	-
1000	12	PS1OO-315/11OO	PS100-250/1100	-
1000	13	PS1OO-315/11OO	PS100-250/1100	垂
1000	14	PSC80-370A1/1320	PSC80-370A1/1320	-
1000	15	PSC80-370A1/1320	PSC80-370A1/1320	-
1250	7	PS125-25O/9OO	PS125-200/900	-
1250	8	PS125-250/1100	PS125-200/1100	-
1250	9	PS125-315/1100	PS125-25O/11OO	■
1250	10	PS125-315/1320	PS125-250/1320	-
1250	11	PS125-315/1320	PS125-250/1320	噴
1250	12	PS125-315/1600	PS125-25O/16OO	-
1250	13	PS125-315/1600	PS125-250/1600	-

GPM	Bar	Pump for diesel 2900rpm	Pump for electric 3500rpm	Motor pump 3500rpm
1250	14	PSC100-375A2/2000	PSC100-375A2/2000	-
1250	15	PSC100-375A2/2000	PSC100-375A2/2000	-
1250	17	PSC100-375B1/2500	PSC100-375B1/2500	-
1500	8	PS125-250/1100	PS125-200/1100	-
1500	9	PS125-315/1100	PS125-250/1100	-
1500	10	PS125-315/1320	PS125-250/1320	-
1500	11	PS125-315/1320	PS125-250/1320	-
1500	12	PS125-315/1600	PS125-250/1600	-
1500	13	PS125-315/1600	PS125-250/1600	-
1500	15	PSC100-375B1/2500	PSC100-375B1/2500	-
1500	18	PSC100-375A1/2500	PSC1OO-375A1/25OO	-
2000	8	PS150-250/1600	PS150-200/1600	-
2000	10	PS150-315/2000	PS150-250/2000	-
2000	11	PSC125-290A1/2000	PSC125-290A1/2000	-
2000	12	PSC125-365A3/2500	PSC125-365A3/25OO	-
2000	13	PS15O-315/25OO	PS15O-25O/25OO	-
2000	15	PSC125-365A2/3150	PSC125-365A2/3150	-
2000	17	PSC125-365B1/3550	PSC125-365B1/355O	-
2500	8	PS150-250/1600	PS150-200/1600	-
2500	10	PS150-315/2000	PS150-250/2000	-
2500	12	PS15O-315/25OO	PS150-250/2500	-
2500	13	PSC150-460B2/3150	PSC150^60B2/3150	-
2500	15	PSC125-365A2/3550	PSC125-365A2/3550	-
2500	17	PSC125-365BV3550	PSC125-365B1/355O	-
3000	10	PSC15O-36OA3/25OO	PSC15O-36OA3/25OO	-
3000	12	PSC150-360A2/3550	PSC15O-36OA2/355O	-
3000	13	PSC150^60B2/3550	PSC150-460B2/3550	-
3000	14	PSC150-360B1/4000	PSC150-360B1/4000	-
3000	16	PSC1SCM60B1/4500	PSC150-460BV4500	-
4000	11	PSC200-420B3/4000	PSC200-420B3/4000	-
4000	14	PSC200-420B2/5000	PSC200-420B2/5000	-
4000	15	PSC150-360A1/5000	PSC15O-36OA1/5OOO	-
4000	17	PSC150-460AV5600	PSC150-460A1/5600	-
5000	10	PSC200-320B2/4000	PSC200-320B2/4000	-
5000	11	PSC200-320B1/5000	PSC200-320BV5000	-
5000	12	PSC200-320A1/5600	PSC200-320A1/5600	-
5000	14	PSC200-420A2/5600	PSC200420A2/5600	-
5000	16	PSC20CM20B1/7100	PSC200^20BI/7100	-
5000	17	PSC200-420AV8000	PSC20CM20A1/8000	-

Other sizes can provide on request.

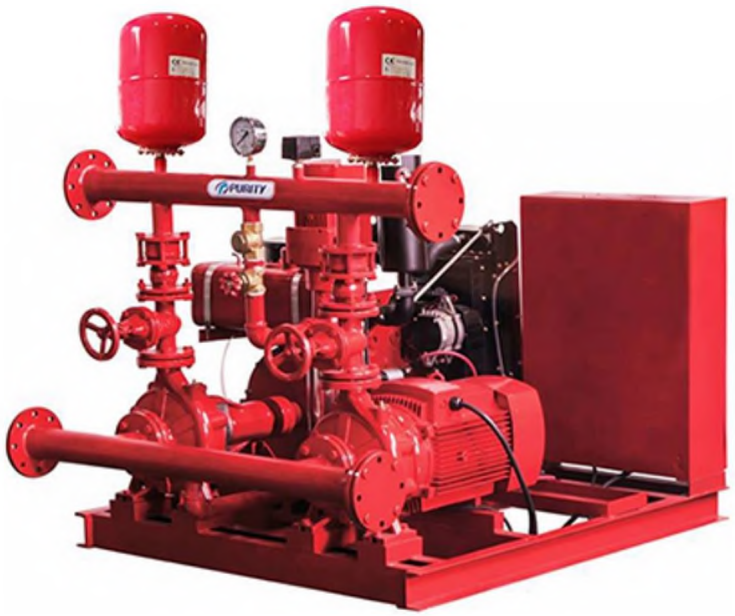

Fire Pump System PEDJT

PEDJT Water Tank With Electric Water Pump For Fire Fighting

TECHNICAL DESCRIPTION

•Switch Automatically between the three pumps

■Can work when the power is off

■With quality NSK bearings, wear resistance mechanical seal

■Circuit available up on request

■Electronic battery charger

Product Specification (50HZ)

Product Description

PEDJ series Skid Mounted Fire Pump System from Purity

PEDJ Fire Pump Set consists of End Suction Centrifugal Pump driven by Electric Motor, End Suction Diesel Pump, and Vertical Jockey Pump.
Pumps are assembled with discharge line accessories as well as Control Panel.

Available **Flow Capacities 50-1500GPM.**
Availabel **Head/Pressure 1-14bar.**
Accessories include Suction pipe, Discharge pipe with Flanges, Battery, Gate Valves, Check Valves, Flexible Expansion Joints, Pressure Switches, Pressure Gauge, Base Frame, etc.

Advantages
0Switch **Automatically** among the three pumps
]Both Manual and Automatic operation is available
0Can work when the power is off
5 Easy Installation
BCustomized size and pump group
®YE3 high **efficient motor** with protection IP55 class F
0High performance and low power consumption
SPump case with Anti-corrosive coating
0With quality **NSK** bearings, wear resistance mechanical seal
SCircuit available up on request
0Different Mounting Styles
! Low Maintenance Cost and available spare parts
@ Electronic battery charger

形 PURITY

Advantages

Energy-saving Certificate

Large Flow Capacity

YE3 Motor IP55 ClassF All Copper Wire

Stainless Steel 304 Impeller & Shaft

Anti-corrosive Coating

NSK Bearing

Costormized Sizes & Pumps

Good Quality & Service 2-Years Guarantee

命 PURITy

Structure

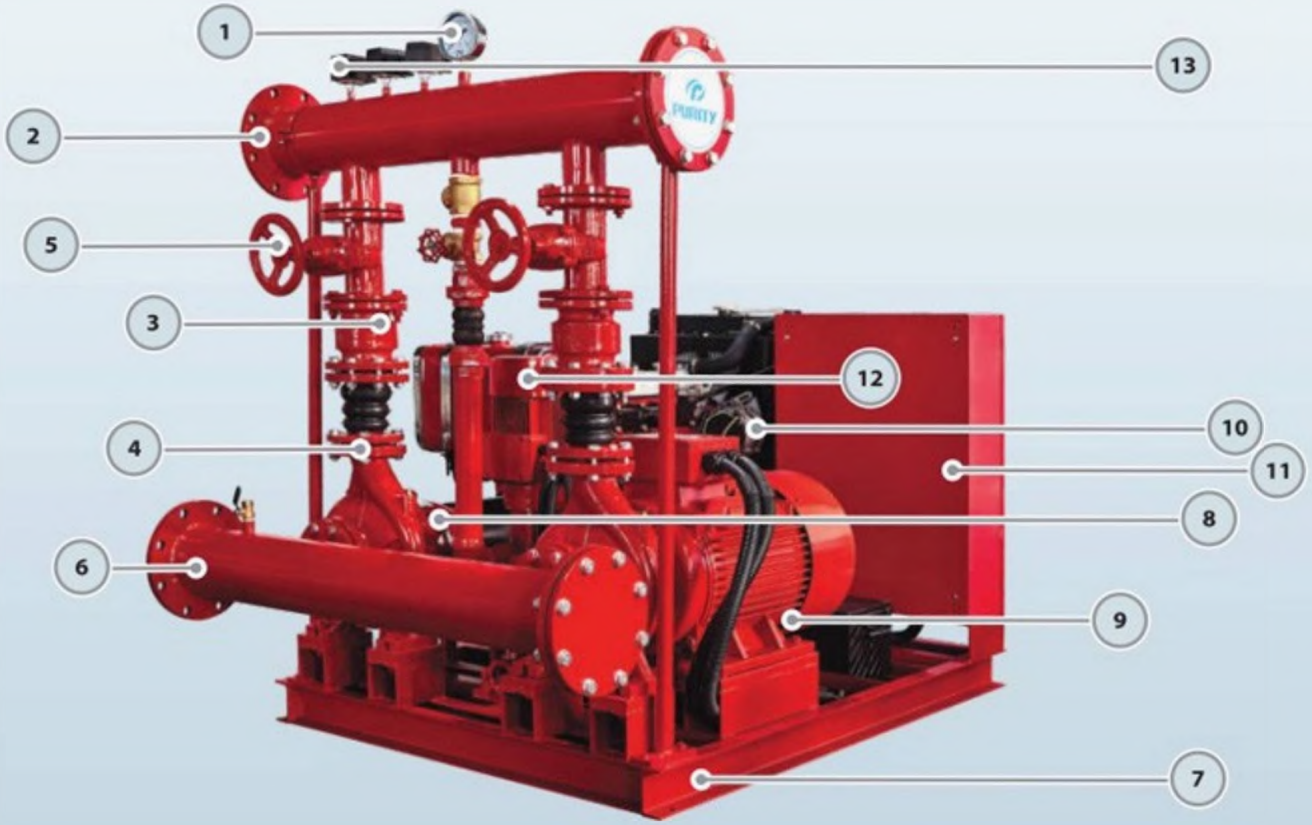

1.Pressure Gauge 2.Dicharge Pipe 3.Check Valve 4.Flexible Joint 5.Gate Valve
6.Suction Pipe 7. Base Frame 8.Pump for Diesel Engine 9.Electric Pump
10.Diesel Engine 11.Control Cabinet 12.Jockey Pump 13.Pressure Switch

命 PURITY

Fire Pump System Models
PEDJ

PEDJ 500/ 8 -50-58-5.5

- Jockey Power: 5.5HP
- Diesel Engine Power: 58HP
- Electric Motor Power: 50HP
- Head/Pressure: 8 Bar
- Flow Capacity: 500GPM
- Purity Electric Diesel Jockey

GPM	BAR	REGULAR MODEL	MOTOR PUMP 2900/3500 rpm	PUMP FOR MOTOR &DIESEL ENGINE 2900/3500 rpm
				
50	6	PEDJ50/6-5.5-5.5-2	P2C 32-200/40	PS 32-200/40
80	7	PEDJ80/7-10-8.6-3	PST 32-250/75	PS 32-250/75
100		PEDJ100/7-10-8.6-3	PST 32-250/75	PS 32-250/75
120		PEDJ120/7-10-10-3	PST 32-250/75D	PS 32-250/75H
150		PEDJ150/7-15-10-3	PST 40-250/110	PS 40-250/110
200		PEDJ200/7-20-27-3	PST 40-250/150	PS 40-250/150
250		PEDJ250/7-25-27-4	PST 50-250/185	PS 50-250/185
300		PEDJ300/7-30-32-4	PST 50-250/220	PS 50-250/220
350		PEDJ350/7-30-32-4	PST 50-250/220	PS 50-250/220
400		PEDJ400/7-40-38-5.5	PST 65-250/300	PS 65-250/300
500	8	PEDJ500/8-50-58-5.5	PST 65-250/370	PS 65-250/370
750		PEDJ750/8-75-75-7.5	PST 80-250/550	PS 80-250/550
1000		PEDJ1000/8-100-99-10	PST 100-250/750	PS 100-250/750
1250		PEDJ1250/8-150-130-10	-	PS 125-250/1100
500	10	PEDJ500/10-60-61-7.5	-	PS 65-315/450
750		PEDJ750/10-100-99-10	-	PS 80-315/750
1000		PEDJ1000/10-125-113-12	-	PS 100-315/900
1250		PEDJ1250/10-180-170-15	-	PS 125-315/1320
500	13	PEDJ500/13-100-99-12	-	PS 65-315/750
750		PEDJ750/13-125-113-12	-	PS 80-315/900
1000		PEDJ1OOO/13-15O-13O-15	-	PS 100-315/1100
1250		PEDJ1250/13-220-170-15	-	PS 125-315/1600
1500		PEDJ1500/13-220-170-15	-	PS 125-315/1600

GPM	BAR	MOTOR	DIESEL	JOCKEY	
				 50HZ	60HZ
50	6	-	178-5.5HP	PV4x9/2HP	PV4x6/2HP
80	7	YE3-132S2-2-7.5kw	186-8.6HP	PV6xII/3HP	PV4x6/2HP
100		YE3-132S2-2-7.5kw	186-8.6HP	PV6xII/3HP	PV4x8/3HP
120		YE3-132S2-2-7.5kw	192-10HP	PV6xII/3HP	PV4x8/3HP
150		YE3-160MI-2-IIkw	192-10HP	PV6xII/3HP	PV4x8/3HP
200		YE3-160M2-2-15kw	380-27HP	PV6xII/3HP	PV4x8/3HP
250		YE3-160L-2-18.5kw	380-27HP	PV8xI2/4HP	PV 6x7/3HP
300		YE3-180M-2-22kw	385-32HP	PV8xI2/4HP	PV 8x8/4HP
350		YE3-180M-2-22kw	385-32HP	PV8xI2/4HP	PV 8x8/4HP
400		YE3-200LI-2-30kw	480-38HP	PV 12xI2/5.5HP	PV 12x7/5.5HP
500	8	YE3-200L2-2-37kw	490N-58HP	PV 12xI2/5.5HP	PV 12x7/5.5HP
750		YE3-250M-2-55kw	490Z-75HP	PV 12xI7/7.5HP	PV 12x9/7.5HP
1000		YE3-280S-2-75kw	4102Z-99HP	PV 30x7/10HP	PV 12xII/10HP
1250		YE3-315S-2-110kw	6110-150HP	PV30x7/10HP	PV30x5/10HP
500	10	YE3-225M-2-45kw	490-61HP	PV 12xI7/7.5HP	PV 12x9/7.5HP
750		YE3-280S-2-75kw	4102Z-99HP	PV 30x7/10HP	PV12xII/10HP
1000		YE3-280M-2-90kw	4108Z-113HP	PV 30x9/12HP	PV 30x6/12HP
1250		YE3-315M-2-132kw	6102ZS-170HP	PV 30xII/15HP	PV 30x8/15HP
500	13	YE3-280S-2-75kw	4102Z-99HP	PV 30x9/12HP	PV12xII/10HP
750		YE3-280M-2-90kw	4108Z-113HP	PV 30x9/12HP	PV 30x6/12HP
1000		YE3-315S-2-110kw	6110-150HP	PV 30xII/15HP	PV 30x8/15HP
1250		YE3-315LI-2-160kw	6102ZS-170HP	PV30xII/15HP	PV 30x8/15HP
1500		YE3-315LI-2-160kw	6102ZS-170HP	PV30xII/15HP	PV 30x8/15HP

Other sizes are also available

命 PURITY

Different Sets Can be Customized Depend on your Needs

More Fire Pump Groups are Available

PEDJ—Electric+Diesel+Jockey Pump +Controller

PDJ—Electric+Diesel Pump +Controller

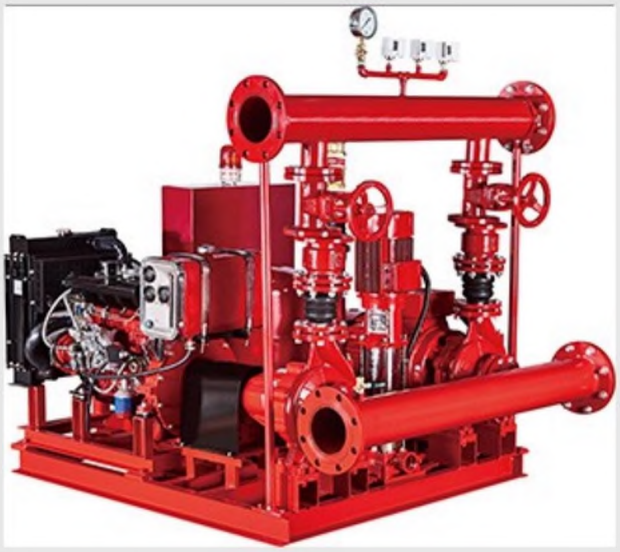

PEDJ--Electric+Diesel+Jockey Pump +Controller with Alarm

PEJ—Electric+Jockey Pump +Controller

PSDT—Diesel Pump+Pressure Tank
+Controller

PEET--2 Vertical Electric Pump
+ Pressure Tank

PEDJT-Electric+Diesel+Jockey Pump
4-Pressure Tank+Controller

PEDT—Electric+Diesel Pump
+ Pressure Tank+Controller

PSCM—Split Case Pump
+ Electric Motor

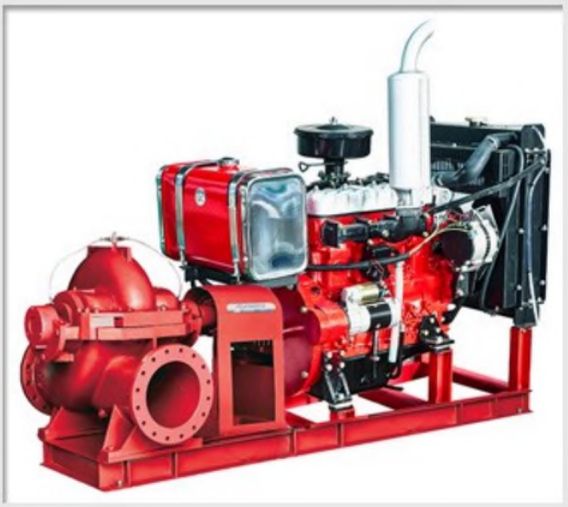

PSCD--Split Case Pump
+ Diesel Engine

Product Specification (60HZ)

Product Description

PEDJ series Skid Mounted Fire Pump System from Purity

PEDJ Fire Pump Set consists of End Suction Centrifugal Pump driven by Electric Motor, End Suction Diesel Pump, and Vertical Jockey Pump.
Pumps are assembled with discharge line accessories as well as Control Panel.

Available **Flow Capacities 50-1500GPM.**
Availabel **Head/Pressure 1-14bar.**
Accessories include Suction pipe, Discharge pipe with Flanges, Battery, Gate Valves, Check Valves, Flexible Expansion Joints, Pressure Switches, Pressure Gauge, Base Frame, etc.

Advantages
0Switch **Automatically** among the three pumps
]Both Manual and Automatic operation is available
0Can work when the power is off
5 Easy Installation
BCustomized size and pump group
®YE3 high **efficient motor** with protection IP55 class F
0High performance and low power consumption
SPump case with Anti-corrosive coating
0With quality **NSK** bearings, wear resistance mechanical seal
SCircuit available up on request
0Different Mounting Styles
! Low Maintenance Cost and available spare parts
@ Electronic battery charger

形 PURITY

Advantages

Energy-saving Certificate

Large Flow Capacity

YE3 Motor IP55 ClassF All Copper Wire

Stainless Steel 304 Impeller & Shaft

Anti-corrosive Coating

NSK Bearing

Costormized Sizes & Pumps

Good Quality & Service 2-Years Guarantee

命 PURITy

Structure

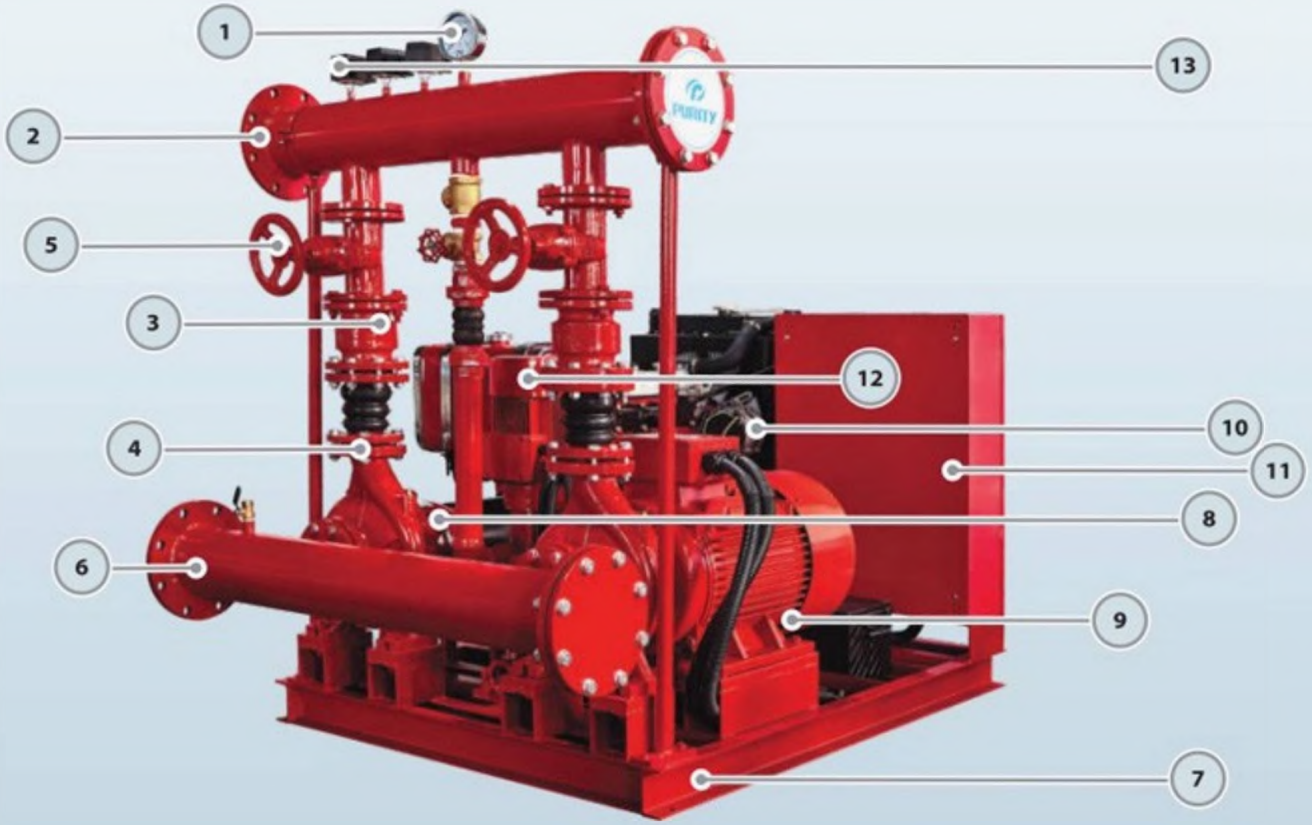

1.Pressure Gauge 2.Dicharge Pipe 3.Check Valve 4.Flexible Joint 5.Gate Valve
6.Suction Pipe 7. Base Frame 8.Pump for Diesel Engine 9.Electric Pump
10.Diesel Engine 11.Control Cabinet 12.Jockey Pump 13.Pressure Switch

命 PURITY

Fire Pump System Models
PEDJ

PEDJ 500/ 8 -50-58-5.5

- Jockey Power: 5.5HP
- Diesel Engine Power: 58HP
- Electric Motor Power: 50HP
- Head/Pressure: 8 Bar
- Flow Capacity: 500GPM
- Purity Electric Diesel Jockey

GPM	BAR	REGULAR MODEL	MOTOR PUMP 2900/3500 rpm	PUMP FOR MOTOR &DIESEL ENGINE 2900/3500 rpm
				
50	6	PEDJ50/6-5.5-5.5-2	P2C 32-200/40	PS 32-200/40
80	7	PEDJ80/7-10-8.6-3	PST 32-250/75	PS 32-250/75
100		PEDJ100/7-10-8.6-3	PST 32-250/75	PS 32-250/75
120		PEDJ120/7-10-10-3	PST 32-250/75D	PS 32-250/75H
150		PEDJ150/7-15-10-3	PST 40-250/110	PS 40-250/110
200		PEDJ200/7-20-27-3	PST 40-250/150	PS 40-250/150
250		PEDJ250/7-25-27-4	PST 50-250/185	PS 50-250/185
300		PEDJ300/7-30-32-4	PST 50-250/220	PS 50-250/220
350		PEDJ350/7-30-32-4	PST 50-250/220	PS 50-250/220
400		PEDJ400/7-40-38-5.5	PST 65-250/300	PS 65-250/300
500	8	PEDJ500/8-50-58-5.5	PST 65-250/370	PS 65-250/370
750		PEDJ750/8-75-75-7.5	PST 80-250/550	PS 80-250/550
1000		PEDJ1000/8-100-99-10	PST 100-250/750	PS 100-250/750
1250		PEDJ1250/8-150-130-10	-	PS 125-250/1100
500	10	PEDJ500/10-60-61-7.5	-	PS 65-315/450
750		PEDJ750/10-100-99-10	-	PS 80-315/750
1000		PEDJ1000/10-125-113-12	-	PS 100-315/900
1250		PEDJ1250/10-180-170-15	-	PS 125-315/1320
500	13	PEDJ500/13-100-99-12	-	PS 65-315/750
750		PEDJ750/13-125-113-12	-	PS 80-315/900
1000		PEDJ1OOO/13-15O-13O-15	-	PS 100-315/1100
1250		PEDJ1250/13-220-170-15	-	PS 125-315/1600
1500		PEDJ1500/13-220-170-15	-	PS 125-315/1600

GPM	BAR	MOTOR	DIESEL	JOCKEY	
				 50HZ	60HZ
50	6	-	178-5.5HP	PV4x9/2HP	PV4x6/2HP
80	7	YE3-132S2-2-7.5kw	186-8.6HP	PV6xII/3HP	PV4x6/2HP
100		YE3-132S2-2-7.5kw	186-8.6HP	PV6xII/3HP	PV4x8/3HP
120		YE3-132S2-2-7.5kw	192-10HP	PV6xII/3HP	PV4x8/3HP
150		YE3-160MI-2-IIkw	192-10HP	PV6xII/3HP	PV4x8/3HP
200		YE3-160M2-2-15kw	380-27HP	PV6xII/3HP	PV4x8/3HP
250		YE3-160L-2-18.5kw	380-27HP	PV8xI2/4HP	PV 6x7/3HP
300		YE3-180M-2-22kw	385-32HP	PV8xI2/4HP	PV 8x8/4HP
350		YE3-180M-2-22kw	385-32HP	PV8xI2/4HP	PV 8x8/4HP
400		YE3-200LI-2-30kw	480-38HP	PV 12xI2/5.5HP	PV 12x7/5.5HP
500	8	YE3-200L2-2-37kw	490N-58HP	PV 12xI2/5.5HP	PV 12x7/5.5HP
750		YE3-250M-2-55kw	490Z-75HP	PV 12xI7/7.5HP	PV 12x9/7.5HP
1000		YE3-280S-2-75kw	4102Z-99HP	PV 30x7/10HP	PV 12xII/10HP
1250		YE3-315S-2-110kw	6110-150HP	PV30x7/10HP	PV30x5/10HP
500	10	YE3-225M-2-45kw	490-61HP	PV 12xI7/7.5HP	PV 12x9/7.5HP
750		YE3-280S-2-75kw	4102Z-99HP	PV 30x7/10HP	PV12xII/10HP
1000		YE3-280M-2-90kw	4108Z-113HP	PV 30x9/12HP	PV 30x6/12HP
1250		YE3-315M-2-132kw	6102ZS-170HP	PV 30xII/15HP	PV 30x8/15HP
500	13	YE3-280S-2-75kw	4102Z-99HP	PV 30x9/12HP	PV12xII/10HP
750		YE3-280M-2-90kw	4108Z-113HP	PV 30x9/12HP	PV 30x6/12HP
1000		YE3-315S-2-110kw	6110-150HP	PV 30xII/15HP	PV 30x8/15HP
1250		YE3-315LI-2-160kw	6102ZS-170HP	PV30xII/15HP	PV 30x8/15HP
1500		YE3-315LI-2-160kw	6102ZS-170HP	PV30xII/15HP	PV 30x8/15HP

Other sizes are also available

命 PURITY

Different Sets Can be Customized Depend on your Needs

More Fire Pump Groups are Available

PEDJ—Electric+Diesel+Jockey Pump +Controller

PDJ—Electric+Diesel Pump +Controller

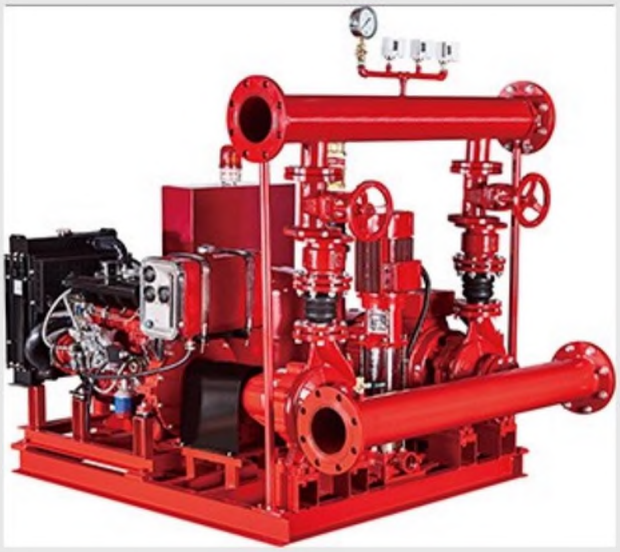

PEDJ--Electric+Diesel+Jockey Pump +Controller with Alarm

PEJ—Electric+Jockey Pump +Controller

PSDT—Diesel Pump+Pressure Tank
+Controller

PEET--2 Vertical Electric Pump
+ Pressure Tank

PEDJT-Electric+Diesel+Jockey Pump
4-Pressure Tank+Controller

PEDT—Electric+Diesel Pump
+ Pressure Tank+Controller

PSCM—Split Case Pump
+ Electric Motor

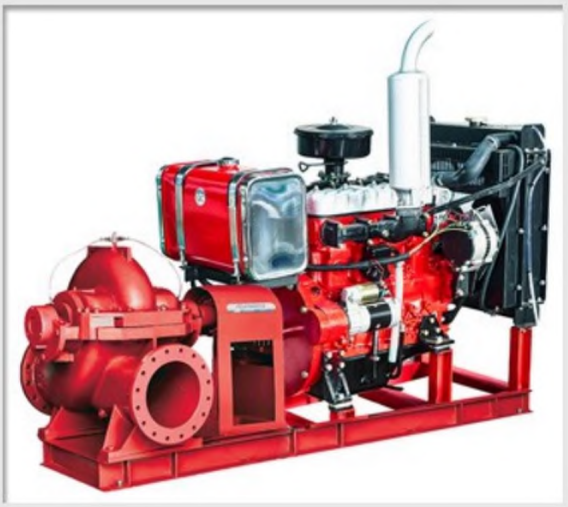

PSCD--Split Case Pump
+ Diesel Engine

По вопросам продаж и поддержки обращайтесь:

Алматы (7273)495-231
Архангельск (8182)63-90-72
Астрахань (8512)99-46-04
Барнаул (3852)73-04-60
Белгород (4722)40-23-64
Брянск (4832)59-03-52
Владивосток (423)249-28-31
Волгоград (844)278-03-48
Вологда (8172)26-41-59
Воронеж (473)204-51-73
Екатеринбург (343)384-55-89
Иваново (4932)77-34-06
Ижевск (3412)26-03-58
Иркутск (395)279-98-46
Казань (843)206-01-48
Калининград (4012)72-03-81
Калуга (4842)92-23-67
Кемерово (3842)65-04-62
Киров (8332)68-02-04
Краснодар (861)203-40-90
Красноярск (391)204-63-61
Курск (4712)77-13-04
Липецк (4742)52-20-81
Магнитогорск (3519)55-03-13
Москва (495)268-04-70
Мурманск (8152)59-64-93
Набережные Челны (8552)20-53-41
Нижний Новгород (831)429-08-12
Новокузнецк (3843)20-46-81
Новосибирск (383)227-86-73
Омск (3812)21-46-40
Орел (4862)44-53-42
Оренбург (3532)37-68-04
Пенза (8412)22-31-16
Пермь (342)205-81-47
Ростов-на-Дону (863)308-18-15
Рязань (4912)46-61-64
Самара (846)206-03-16
Санкт-Петербург (812)309-46-40
Саратов (845)249-38-78
Севастополь (8692)22-31-93
Симферополь (3652)67-13-56
Смоленск (4812)29-41-54
Сочи (862)225-72-31
Ставрополь (8652)20-65-13
Сургут (3462)77-98-35
Тверь (4822)63-31-35
Томск (3822)98-41-53
Тула (4872)74-02-29
Тюмень (3452)66-21-18
Ульяновск (8422)24-23-59
Уфа (347)229-48-12
Хабаровск (4212)92-98-04
Челябинск (351)202-03-61
Череповец (8202)49-02-64
Ярославль (4852)69-52-93

Россия (495)268-04-70
Киргизия (996)312-96-26-47
Казахстан (7172)727-132

pyt@nt-rt.ru || https://purity.nt-rt.ru/